User's Manual

16

RL78/G1D

User's Manual: Hardware

16-Bit Single-Chip Microcontrollers

All information contained in these materials, including products and product specifications, represents information on the product at the time of publication and is subject to change by Renesas Electronics Corp. without notice. Please review the latest information published by Renesas Electronics Corp. through various means, including the Renesas Electronics Corp. website (http://www.renesas.com).

Renesas Electronics
www.renesas.com

Rev.1.20 Dec 2016

Notice

1. Descriptions of circuits, software and other related information in this document are provided only to illustrate the operation of semiconductor products and application examples. You are fully responsible for the incorporation of these circuits, software, and information in the design of your equipment. Renesas Electronics assumes no responsibility for any losses incurred by you or third parties arising from the use of these circuits, software, or information.
2. Renesas Electronics has used reasonable care in preparing the information included in this document, but Renesas Electronics does not warrant that such information is error free. Renesas Electronics assumes no liability whatsoever for any damages incurred by you resulting from errors in or omissions from the information included herein.
3. Renesas Electronics does not assume any liability for infringement of patents, copyrights, or other intellectual property rights of third parties by or arising from the use of Renesas Electronics products or technical information described in this document. No license, express, implied or otherwise, is granted hereby under any patents, copyrights or other intellectual property rights of Renesas Electronics or others.
4. You should not alter, modify, copy, or otherwise misappropriate any Renesas Electronics product, whether in whole or in part. Renesas Electronics assumes no responsibility for any losses incurred by you or third parties arising from such alteration, modification, copy or otherwise misappropriation of Renesas Electronics product.
5. Renesas Electronics products are classified according to the following two quality grades: “Standard” and “High Quality”. The recommended applications for each Renesas Electronics product depends on the product’s quality grade, as indicated below.

   “Standard”: Computers; office equipment; communications equipment; test and measurement equipment; audio and visual equipment; home electronic appliances; machine tools; personal electronic equipment; and industrial robots etc.

   “High Quality”: Transportation equipment (automobiles, trains, ships, etc.); traffic control systems; anti-disaster systems; anti-crime systems; and safety equipment etc.

   Renesas Electronics products are neither intended nor authorized for use in products or systems that may pose a direct threat to human life or bodily injury (artificial life support devices or systems, surgical implantations etc.), or may cause serious property damages (nuclear reactor control systems, military equipment etc.). You must check the quality grade of each Renesas Electronics product before using it in a particular application. You may not use any Renesas Electronics product for any application for which it is not intended. Renesas Electronics shall not be in any way liable for any damages or losses incurred by you or third parties arising from the use of any Renesas Electronics product for which the product is not intended by Renesas Electronics.
6. You should use the Renesas Electronics products described in this document within the range specified by Renesas Electronics, especially with respect to the maximum rating, operating supply voltage range, movement power voltage range, heat radiation characteristics, installation and other product characteristics. Renesas Electronics shall have no liability for malfunctions or damages arising out of the use of Renesas Electronics products beyond such specified ranges.
7. Although Renesas Electronics endeavors to improve the quality and reliability of its products, semiconductor products have specific characteristics such as the occurrence of failure at a certain rate and malfunctions under certain use conditions. Further, Renesas Electronics products are not subject to radiation resistance design. Please be sure to implement safety measures to guard them against the possibility of physical injury, and injury or damage caused by fire in the event of the failure of a Renesas Electronics product, such as safety design for hardware and software including but not limited to redundancy, fire control and malfunction prevention, appropriate treatment for aging degradation or any other appropriate measures. Because the evaluation of microcomputer software alone is very difficult, please evaluate the safety of the final products or systems manufactured by you.
8. Please contact a Renesas Electronics sales office for details as to environmental matters such as the environmental compatibility of each Renesas Electronics product. Please use Renesas Electronics products in compliance with all applicable laws and regulations that regulate the inclusion or use of controlled substances, including without limitation, the EU RoHS Directive. Renesas Electronics assumes no liability for damages or losses occurring as a result of your noncompliance with applicable laws and regulations.
9. Renesas Electronics products and technology may not be used for or incorporated into any products or systems whose manufacture, use, or sale is prohibited under any applicable domestic or foreign laws or regulations. You should not use Renesas Electronics products or technology described in this document for any purpose relating to military applications or use by the military, including but not limited to the development of weapons of mass destruction. When exporting the Renesas Electronics products or technology described in this document, you should comply with the applicable export control laws and regulations and follow the procedures required by such laws and regulations.
10. It is the responsibility of the buyer or distributor of Renesas Electronics products, who distributes, disposes of, or otherwise places the product with a third party, to notify such third party in advance of the contents and conditions set forth in this document, Renesas Electronics assumes no responsibility for any losses incurred by you or third parties as a result of unauthorized use of Renesas Electronics products.
11. This document may not be reproduced or duplicated in any form, in whole or in part, without prior written consent of Renesas Electronics.
12. Please contact a Renesas Electronics sales office if you have any questions regarding the information contained in this document or Renesas Electronics products, or if you have any other inquiries.

(Note 1) “Renesas Electronics” as used in this document means Renesas Electronics Corporation and also includes its majority-owned subsidiaries.

(Note 2) “Renesas Electronics product(s)” means any product developed or manufactured by or for Renesas Electronics.

(2012.4)

NOTES FOR CMOS DEVICES

(1) VOLTAGE APPLICATION WAVEFORM AT INPUT PIN: Waveform distortion due to input noise or a reflected wave may cause malfunction. If the input of the CMOS device stays in the area between VIL (MAX) and VIH (MIN) due to noise, etc., the device may malfunction. Take care to prevent chattering noise from entering the device when the input level is fixed, and also in the transition period when the input level passes through the area between VIL (MAX) and VIH (MIN).

(2) HANDLING OF UNUSED INPUT PINS: Unconnected CMOS device inputs can be cause of malfunction. If an input pin is unconnected, it is possible that an internal input level may be generated due to noise, etc., causing malfunction. CMOS devices behave differently than Bipolar or NMOS devices. Input levels of CMOS devices must be fixed high or low by using pull-up or pull-down circuitry. Each unused pin should be connected to VDD or GND via a resistor if there is a possibility that it will be an output pin. All handling related to unused pins must be judged separately for each device and according to related specifications governing the device.

(3) PRECAUTION AGAINST ESD: A strong electric field, when exposed to a MOS device, can cause destruction of the gate oxide and ultimately degrade the device operation. Steps must be taken to stop generation of static electricity as much as possible, and quickly dissipate it when it has occurred. Environmental control must be adequate. When it is dry, a humidifier should be used. It is recommended to avoid using insulators that easily build up static electricity. Semiconductor devices must be stored and transported in an anti-static container, static shielding bag or conductive material. All test and measurement tools including work benches and floors should be grounded. The operator should be grounded using a wrist strap. Semiconductor devices must not be touched with bare hands. Similar precautions need to be taken for PW boards with mounted semiconductor devices.

(4) STATUS BEFORE INITIALIZATION: Power-on does not necessarily define the initial status of a MOS device. Immediately after the power source is turned ON, devices with reset functions have not yet been initialized. Hence, power-on does not guarantee output pin levels, I/O settings or contents of registers. A device is not initialized until the reset signal is received. A reset operation must be executed immediately after power-on for devices with reset functions.

(5) POWER ON/OFF SEQUENCE: In the case of a device that uses different power supplies for the internal operation and external interface, as a rule, switch on the external power supply after switching on the internal power supply. When switching the power supply off, as a rule, switch off the external power supply and then the internal power supply. Use of the reverse power on/off sequences may result in the application of an overvoltage to the internal elements of the device, causing malfunction and degradation of internal elements due to the passage of an abnormal current. The correct power on/off sequence must be judged separately for each device and according to related specifications governing the device.

(6) INPUT OF SIGNAL DURING POWER OFF STATE : Do not input signals or an I/O pull-up power supply while the device is not powered. The current injection that results from input of such a signal or I/O pull-up power supply may cause malfunction and the abnormal current that passes in the device at this time may cause degradation of internal elements. Input of signals during the power off state must be judged separately for each device and according to related specifications governing the device.

How to Use This Manual

Readers

This manual is intended for user engineers who wish to understand the functions of the RL78/G1D and design and develop application systems and programs for these devices.

- 48-pin: R5F11AGG
  R5F11AGH
  R5F11AGJ

Purpose

This manual is intended to give users an understanding of the functions described in the **Organization** below.

Organization

The RL78/G1D manual is separated into two parts: this manual and the software edition (common to the RL78 family).
Moreover, there is Bluetooth® Low Energy protocol stack user's manual for using RF transceiver function of RL78/G1D.

RL78/G1D User's Manual Hardware	**RL78 family User's Manual Software**	**Bluetooth® Low Energy protocol stack user's manual**
● Pin functions ● Internal block functions ● Interrupts ● Other on-chip peripheral functions ● Electrical specifications	● CPU functions ● Instruction set ● Explanation of each instruction	● Install ● Construction ● How to make execution file ● Description of function

How to Read This Manual

It is assumed that the readers of this manual have general knowledge of electrical engineering, logic circuits, and microcontrollers.

- To gain a general understanding of functions:
  → Read this manual in the order of the **CONTENTS**. The mark "<R>" shows major revised points. The revised points can be easily searched by copying an "<R>" in the PDF file and specifying it in the "Find what:" field.
- How to interpret the register format:
  → For a bit number enclosed in angle brackets, the bit name is defined as a reserved word in the assembler, and is defined as an sfr variable using the #pragma sfr directive in the compiler.
- To know details of the RL78/G1D Microcontroller instructions:
  → Refer to the separate document **RL78 Family Software User's Manual (R01US0015E)**.

Conventions

Data significance:	Higher digits on the left and lower digits on the right	
Active low representations:	$\overline{\times\times\times}$(overscore over pin and signal name)	
Note:	Footnote for item marked with **Note** in the text	
Caution:	Information requiring particular attention	
Remark:	Supplementary information	
Numerical representations:	Binary	···×××× or ××××B
	Decimal	···××××
	Hexadecimal	···××××H

Related Documents

The related documents indicated in this publication may include preliminary versions. However, preliminary versions are not marked as such.

Documents Related to Devices

Document Name	Document No.
RL78/G1D User's Manual Hardware	This manual
RL78 Family Software User's Manual	R01US0015E

Documents Related to Flash Memory Programming

Document Name		Document No.
PG-FP5 Flash Memory Programmer User's Manual		—
	RL78, 78K, V850, RX100, RX200, RX600 (Except RX64x), R8C, SH	R20UT2923E
	Common	R20UT2922E
	Setup Manual	R20UT0930E

Caution The related documents listed above are subject to change without notice. Be sure to use the latest version of each document when designing.

Other Documents

Document Name	Document No.
RENESAS Microcontrollers RL78 Family	R01CP0003E
Semiconductor Package Mount Manual	R50ZZ0003EJ
Semiconductor Reliability Handbook	R51ZZ0001E

Caution The related documents listed above are subject to change without notice. Be sure to use the latest version of each document when designing.

Notes on using the RF transceiver

The use of wireless receivers and transmitters is restricted by international standards and domestic regulations. Wireless receivers and transmitters must therefore be used in accordance with the applicable laws and regulations of the country in which they are being used.

The following standards typically apply to the use of the 2.4 GHz band:
Japan: ARIB STD-T66
United States: FCC CFR47 Sections 15.247 and 15.249
Europe: EN300 440 and EN 300 328

All trademarks and registered trademarks are the property of their respective owners.
Bluetooth is a trademark of Bluetooth SIG, Inc. U.S.A.
EEPROM is a trademark of Renesas Electronics Corporation.
SuperFlash is a registered trademark of Silicon Storage Technology, Inc. in several countries including the United States and Japan.

Caution: This product uses SuperFlash® technology licensed from Silicon Storage Technology, Inc.

CONTENTS

CHAPTER 1 OUTLINE **1**

1.1 Features **1**
1.2 List of Part Numbers **4**
1.3 Pin Configuration (Top View) **5**
1.4 Pin Identification **6**
1.5 Block Diagram **7**
1.6 Outline of Functions **8**

CHAPTER 2 CONNECTION BETWEEN MCU AND RF TRANSCEIVER **11**

2.1 Connection Pins of MCU and RF Transceiver **11**
2.2 Communication Interface Between MCU and RF Transceiver **13**
2.3 Initial Settings of Unused Internal Pins of MCU **13**
2.4 Operation Clock of Bluetooth Low Energy **14**
2.5 Power Configuration **15**

CHAPTER 3 PIN FUNCTIONS **16**

3.1 Pin Functions **16**
3.2 Functions Other than Port Pins **19**
3.3 Connection of Unused Pins **22**
3.4 Block Diagrams of Pins **24**

CHAPTER 4 CPU ARCHITECTURE **36**

4.1 Memory Space **36**
4.1.1 Internal program memory space 42
4.1.2 Mirror area 45
4.1.3 Internal data memory space 47
4.1.4 Special function register (SFR) area 47
4.1.5 Extended special function register (2nd SFR: 2nd Special Function Register) area 47
4.1.6 Data memory addressing 48
4.2 Processor Registers **51**
4.2.1 Control registers 51
4.2.2 General-purpose registers 53
4.2.3 ES and CS registers 54
4.2.4 Special function registers (SFRs) 55
4.2.5 Extended special function registers (2nd SFRs: 2nd Special Function Registers) 61
4.3 Instruction Address Addressing **67**

4.3.1 Relative addressing 67
4.3.2 Immediate addressing 67
4.3.3 Table indirect addressing 68
4.3.4 Register direct addressing 68
4.4 Addressing for Processing Data Addresses 69
4.4.1 Implied addressing 69
4.4.2 Register addressing 69
4.4.3 Direct addressing 70
4.4.4 Short direct addressing 71
4.4.5 SFR addressing 72
4.4.6 Register indirect addressing 73
4.4.7 Based addressing 74
4.4.8 Based indexed addressing 78
4.4.9 Stack addressing 79

CHAPTER 5 PORT FUNCTIONS 83
5.1 Port Functions 83
5.2 Port Configuration 84
5.2.1 Port 0 85
5.2.2 Port 1 85
5.2.3 Port 2 86
5.2.4 Port 3 86
5.2.5 Port 4 86
5.2.6 Port 6 86
5.2.7 Port 7 86
5.2.8 Port 12 87
5.2.9 Port 13 87
5.2.10 Port 14 87
5.2.11 GPIO port 87
5.3 Registers Controlling Port Function 88
5.3.1 Port mode registers (PMxx) 91
5.3.2 Port registers (Pxx) 93
5.3.3 Pull-up resistor option registers (PUxx) 95
5.3.4 Port input mode registers (PIMxx) 96
5.3.5 Port output mode registers (POMxx) 97
5.3.6 Port mode control registers (PMCxx) 98
5.3.7 A/D port configuration register (ADPC) 99
5.3.8 Peripheral I/O redirection register (PIOR) 100
5.3.9 Global digital input disable register (GDIDIS) 100
5.4 Port Function Operations 101
5.4.1 Writing to I/O port 101

5.4.2 Reading from I/O port 101
5.4.3 Operations on I/O port 101
5.4.4 Handling different potential (1.8 V, 2.5 V) by using EVDD ≤ VDD 102
5.4.5 Handling different potential (1.8 V, 2.5 V) by using I/O buffers 102
5.5 Register Settings When Using Alternate Function 104
5.5.1 Basic concept when using alternate function 104
5.5.2 Register settings for alternate function whose output function is not used 105
5.5.3 Register setting examples for used port and alternate functions 106
5.6 Cautions When Using Port Function 111
5.6.1 Cautions on 1-bit manipulation instruction for port register n (Pn) 111
5.6.2 Notes on specifying the pin settings 112

CHAPTER 6 CLOCK GENERATOR 113

6.1 Functions of Clock Generator 113
6.2 Configuration of Clock Generator 115
6.3 Registers Controlling Clock Generator 117
6.3.1 Clock operation mode control register (CMC) 117
6.3.2 System clock control register (CKC) 120
6.3.3 Clock operation status control register (CSC) 121
6.3.4 Oscillation stabilization time counter status register (OSTC) 122
6.3.5 Oscillation stabilization time select register (OSTS) 124
6.3.6 Peripheral enable register 0 (PER0) 126
6.3.7 Subsystem clock supply mode control register (OSMC) 128
6.3.8 High-speed on-chip oscillator frequency select register (HOCODIV) 129
6.3.9 High-speed on-chip oscillator trimming register (HIOTRM) 130
6.4 System Clock Oscillator 131
6.4.1 X1 oscillator 131
6.4.2 XT1 oscillator 131
6.4.3 High-speed on-chip oscillator 135
6.4.4 Low-speed on-chip oscillator 135
6.4.5 RF reference clock oscillator 135
6.5 Clock Generator Operation 136
6.6 Controlling Clock 138
6.6.1 Example of setting high-speed on-chip oscillator 138
6.6.2 Example of setting X1 oscillation clock 139
6.6.3 Example of setting XT1 oscillation clock 140
6.6.4 CPU clock status transition diagram 141
6.6.5 Condition before changing CPU clock and processing after changing CPU clock 147
6.6.6 Time required for switchover of CPU clock and system clock 149
6.6.7 Conditions before clock oscillation is stopped 150
6.7 Resonator and Oscillator Constants 151

CHAPTER 7 TIMER ARRAY UNIT **156**

7.1 Functions of Timer Array Unit **157**

7.1.1 Independent channel operation function 157

7.1.2 Simultaneous channel operation function 158

7.1.3 8-bit timer operation function (channel 1 and 3 only) 159

7.2 Configuration of Timer Array Unit **160**

7.2.1 Timer count register mn (TCRmn) 165

7.2.2 Timer data register mn (TDRmn) 167

7.3 Registers Controlling Timer Array Unit **168**

7.3.1 Peripheral enable register 0 (PER0) 169

7.3.2 Timer clock select register m (TPSm) 170

7.3.3 Timer mode register mn (TMRmn) 173

7.3.4 Timer status register mn (TSRmn) 179

7.3.5 Timer channel enable status register m (TEm) 180

7.3.6 Timer channel start register m (TSm) 181

7.3.7 Timer channel stop register m (TTm) 182

7.3.8 Timer input select register 0 (TIS0) 183

7.3.9 Timer output enable register 0 (TOE0) 184

7.3.10 Timer output register 0 (TO0) 185

7.3.11 Timer output level register 0 (TOL0) 186

7.3.12 Timer output mode register 0 (TOM0) 187

7.3.13 Noise filter enable register 1 (NFEN1) 188

7.3.14 Registers controlling port functions of pins to be used for timer I/O 189

7.4 Basic Rules of Timer Array Unit **190**

7.4.1 Basic rules of simultaneous channel operation function 190

7.4.2 Basic rules of 8-bit timer operation function (channels 1 and 3 only) 192

7.5 Operation of Counter **193**

7.5.1 Count clock (fTCLK) 193

7.5.2 Start timing of counter 195

7.5.3 Operation of counter 196

7.6 Channel Output (TO0n pin) Control **201**

7.6.1 TO0n pin output circuit configuration 201

7.6.2 TO0n pin output setting 202

7.6.3 Cautions on channel output operation 203

7.6.4 Collective manipulation of TO0n bit 208

7.6.5 Timer interrupt and TO0n pin output at operation start 209

7.7 Timer Input (TI0n) Control **210**

7.7.1 TI0n input circuit configuration 210

7.7.2 Noise filter 210

7.7.3 Cautions on channel input operation 211

7.8 Independent Channel Operation Function of Timer Array Unit **212**

7.8.1 Operation as interval timer/square wave output 212
7.8.2 Operation as external event counter 218
7.8.3 Operation as frequency divider (channel 0 of unit 0 only) 223
7.8.4 Operation as input pulse interval measurement 227
7.8.5 Operation as input signal high-/low-level width measurement 231
7.8.6 Operation as delay counter 235
7.9 Simultaneous Channel Operation Function of Timer Array Unit 240
7.9.1 Operation as one-shot pulse output function 240
7.9.2 Operation as PWM function 247
7.9.3 Operation as multiple PWM output function 254
7.10 Cautions When Using Timer Array Unit 262
7.10.1 Cautions when using timer output 262

CHAPTER 8 REAL-TIME CLOCK 263

8.1 Functions of Real-time Clock 263
8.2 Configuration of Real-time Clock 263
8.3 Registers Controlling Real-time Clock 265
8.3.1 Peripheral enable register 0 (PER0) 266
8.3.2 Subsystem clock supply mode control register (OSMC) 267
8.3.3 Real-time clock control register 0 (RTCC0) 268
8.3.4 Real-time clock control register 1 (RTCC1) 269
8.3.5 Second count register (SEC) 271
8.3.6 Minute count register (MIN) 271
8.3.7 Hour count register (HOUR) 272
8.3.8 Day count register (DAY) 274
8.3.9 Week count register (WEEK) 275
8.3.10 Month count register (MONTH) 276
8.3.11 Year count register (YEAR) 276
8.3.12 Watch error correction register (SUBCUD) 277
8.3.13 Alarm minute register (ALARMWM) 278
8.3.14 Alarm hour register (ALARMWH) 278
8.3.15 Alarm week register (ALARMWW) 279
8.3.16 Port mode register 3 (PM3) 280
8.3.17 Port register 3 (P3) 280
8.4 Real-time Clock Operation 281
8.4.1 Starting operation of real-time clock 281
8.4.2 Shifting to HALT/STOP mode after starting operation 282
8.4.3 Reading/writing real-time clock 283
8.4.4 Setting alarm of real-time clock 285
8.4.5 1 Hz output of real-time clock 286
8.4.6 Example of watch error correction of real-time clock 287

CHAPTER 9 12-BIT INTERVAL TIMER **292**

9.1 Functions of 12-bit Interval Timer **292**
9.2 Configuration of 12-bit Interval Timer **292**
9.3 Registers Controlling 12-bit Interval Timer **293**
9.3.1 Peripheral enable register 0 (PER0) 293
9.3.2 Subsystem clock supply mode control register (OSMC) 294
9.3.3 Interval timer control register (ITMC) 295
9.4 12-bit Interval Timer Operation **296**
9.4.1 12-bit interval timer operation timing 296
9.4.2 Start of count operation and re-enter to HALT/STOP mode after returned from HALT/STOP mode 297

CHAPTER 10 CLOCK OUTPUT/BUZZER OUTPUT CONTROLLER **298**

10.1 Functions of Clock Output/Buzzer Output Controller **298**
10.2 Configuration of Clock Output/Buzzer Output Controller **300**
10.3 Registers Controlling Clock Output/Buzzer Output Controller **300**
10.3.1 Clock output select registers n (CKSn) 300
10.3.2 Registers controlling port functions of pins to be used for clock or buzzer output 302
10.4 Operations of Clock Output/Buzzer Output Controller **303**
10.4.1 Operation as output pin 303
10.5 Cautions of Clock Output/Buzzer Output Controller **303**

CHAPTER 11 WATCHDOG TIMER **304**

11.1 Functions of Watchdog Timer **304**
11.2 Configuration of Watchdog Timer **305**
11.3 Register Controlling Watchdog Timer **306**
11.3.1 Watchdog timer enable register (WDTE) 306
11.4 Operation of Watchdog Timer **307**
11.4.1 Controlling operation of watchdog timer 307
11.4.2 Setting overflow time of watchdog timer 308
11.4.3 Setting window open period of watchdog timer 309
11.4.4 Setting watchdog timer interval interrupt 311

CHAPTER 12 A/D CONVERTER **312**

12.1 Function of A/D Converter **312**
12.2 Configuration of A/D Converter **314**
12.3 Registers Controlling A/D Converter **316**
12.3.1 Peripheral enable register 0 (PER0) 317
12.3.2 A/D converter mode register 0 (ADM0) 318
12.3.3 A/D converter mode register 1 (ADM1) 327

12.3.4 A/D converter mode register 2 (ADM2) 328
12.3.5 10-bit A/D conversion result register (ADCR) 330
12.3.6 8-bit A/D conversion result register (ADCRH) 331
12.3.7 Analog input channel specification register (ADS) 332
12.3.8 Conversion result comparison upper limit setting register (ADUL) 334
12.3.9 Conversion result comparison lower limit setting register (ADLL) 334
12.3.10 A/D test register (ADTES) 335
12.3.11 Registers controlling port function of analog input pins 336
12.4 A/D Converter Conversion Operations 337
12.5 Input Voltage and Conversion Results 339
12.6 A/D Converter Operation Modes 340
12.6.1 Software trigger mode (select mode, sequential conversion mode) 340
12.6.2 Software trigger mode (select mode, one-shot conversion mode) 341
12.6.3 Software trigger mode (scan mode, sequential conversion mode) 342
12.6.4 Software trigger mode (scan mode, one-shot conversion mode) 343
12.6.5 Hardware trigger no-wait mode (select mode, sequential conversion mode) 344
12.6.6 Hardware trigger no-wait mode (select mode, one-shot conversion mode) 345
12.6.7 Hardware trigger no-wait mode (scan mode, sequential conversion mode) 346
12.6.8 Hardware trigger no-wait mode (scan mode, one-shot conversion mode) 347
12.6.9 Hardware trigger wait mode (select mode, sequential conversion mode) 348
12.6.10 Hardware trigger wait mode (select mode, one-shot conversion mode) 349
12.6.11 Hardware trigger wait mode (scan mode, sequential conversion mode) 350
12.6.12 Hardware trigger wait mode (scan mode, one-shot conversion mode) 351
12.7 A/D Converter Setup Flowchart 352
12.7.1 Setting up software trigger mode 352
12.7.2 Setting up hardware trigger no-wait mode 353
12.7.3 Setting up hardware trigger wait mode 354
12.7.4 Setup when temperature sensor output/internal reference voltage output is selected (example for software trigger mode and one-shot conversion mode) 355
12.7.5 Setting up test mode 356
12.8 SNOOZE Mode Function 357
12.9 How to Read A/D Converter Characteristics Table 361
12.10 Cautions for A/D Converter 363

CHAPTER 13 SERIAL ARRAY UNIT 367

13.1 Functions of Serial Array Unit 368
13.1.1 3-wire serial I/O (CSI00, CSI20, CSI21) 368
13.1.2 UART (UART0, UART1) 369
13.1.3 Simplified I^2C (IIC00, IIC20) 370
13.2 Configuration of Serial Array Unit 371
13.2.1 Shift register 374

13.2.2 Lower 8/9 bits of the serial data register mn (SDRmn) ... 374
13.3 Registers Controlling Serial Array Unit ... 376
13.3.1 Peripheral enable register 0 (PER0) ... 377
13.3.2 Serial clock select register m (SPSm) ... 378
13.3.3 Serial mode register mn (SMRmn) ... 379
13.3.4 Serial communication operation setting register mn (SCRmn) ... 380
13.3.5 Higher 7 bits of the serial data register mn (SDRmn) ... 383
13.3.6 Serial flag clear trigger register mn (SIRmn) ... 385
13.3.7 Serial status register mn (SSRmn) ... 386
13.3.8 Serial channel start register m (SSm) ... 388
13.3.9 Serial channel stop register m (STm) ... 389
13.3.10 Serial channel enable status register m (SEm) ... 390
13.3.11 Serial output enable register m (SOEm) ... 391
13.3.12 Serial output register m (SOm) ... 392
13.3.13 Serial output level register m (SOLm) ... 393
13.3.14 Serial standby control register 0 (SSC0) ... 394
13.3.15 Noise filter enable register 0 (NFEN0) ... 395
13.3.16 Registers controlling port functions of serial input/output pins ... 396
13.4 Operation stop mode ... 397
13.4.1 Stopping the operation by units ... 397
13.4.2 Stopping the operation by channels ... 398
13.5 Operation of 3-Wire Serial I/O (CSI00, CSI20, CSI21) Communication ... 399
13.5.1 Master transmission ... 401
13.5.2 Master reception ... 411
13.5.3 Master transmission/reception ... 420
13.5.4 Slave transmission ... 430
13.5.5 Slave reception ... 441
13.5.6 Slave transmission/reception ... 448
13.5.7 SNOOZE mode function ... 458
13.5.8 Calculating transfer clock frequency ... 463
13.5.9 Procedure for processing errors that occurred during 3-wire serial I/O (CSI00, CSI20, CSI21) communication ... 465
13.6 Operation of UART (UART0, UART1) Communication ... 466
13.6.1 UART transmission ... 468
13.6.2 UART reception ... 478
13.6.3 SNOOZE mode function ... 485
13.6.4 Calculating baud rate ... 493
13.6.5 Procedure for processing errors that occurred during UART (UART0 and UART1) communication ... 497
13.7 Operation of Simplified I^2C (IIC00, IIC20) Communication ... 498
13.7.1 Address field transmission ... 500

13.7.2 Data transmission 506
13.7.3 Data reception 510
13.7.4 Stop condition generation 516
13.7.5 Calculating transfer rate 517
13.7.6 Procedure for processing errors that occurred during simplified I^2C (IIC00, IIC20) communication 519

CHAPTER 14 SERIAL INTERFACE IICA 520

14.1 Functions of Serial Interface IICA 520
14.2 Configuration of Serial Interface IICA 523
14.3 Registers Controlling Serial Interface IICA 526
14.3.1 Peripheral enable register 0 (PER0) 527
14.3.2 IICA control register n0 (IICCTLn0) 527
14.3.3 IICA status register n (IICSn) 532
14.3.4 IICA flag register n (IICFn) 534
14.3.5 IICA control register n1 (IICCTLn1) 536
14.3.6 IICA low-level width setting register n (IICWLn) 538
14.3.7 IICA high-level width setting register n (IICWHn) 538
14.3.8 Port mode register 6 (PM6) 539
14.4 I^2C Bus Mode Functions 540
14.4.1 Pin configuration 540
14.4.2 Setting transfer clock by using IICWLn and IICWHn registers 541
14.5 I^2C Bus Definitions and Control Methods 543
14.5.1 Start conditions 543
14.5.2 Addresses 544
14.5.3 Transfer direction specification 544
14.5.4 Acknowledge (ACK) 545
14.5.5 Stop condition 546
14.5.6 Wait 547
14.5.7 Canceling wait 549
14.5.8 Interrupt request (INTIICAn) generation timing and wait control 550
14.5.9 Address match detection method 551
14.5.10 Error detection 551
14.5.11 Extension code 551
14.5.12 Arbitration 552
14.5.13 Wakeup function 554
14.5.14 Communication reservation 557
14.5.15 Cautions 561
14.5.16 Communication operations 562
14.5.17 Timing of I^2C interrupt request (INTIICAn) occurrence 569
14.6 Timing Charts 590

CHAPTER 15 RF TRANSCEIVER **605**

15.1 Overview of RF Transceiver **606**

15.2 Pin Functions **607**

15.2.1 Digital pins 607

15.2.2 Analog pins 608

15.3 Configuration of RF Transceiver **609**

15.3.1 Digital block 610

15.3.2 Interface block 612

15.3.3 RF memory block 612

15.3.4 RF control register block 612

15.3.5 Modem block 612

15.3.6 Analog block 613

15.3.7 Power management block 614

15.3.8 Wakeup block 614

15.3.9 RF clock generator circuit block 615

15.3.10 RF reset circuit block 615

15.4 RF Modes **616**

15.4.1 RF operation modes 616

15.4.2 RF standby modes 617

15.4.3 State transition diagram 619

15.4.4 Mode transition time 620

15.4.5 Pin status in each mode 621

15.4.6 Function status in each mode 622

CHAPTER 16 MULTIPLIER AND DIVIDER/MULTIPLY-ACCUMULATOR **624**

16.1 Functions of Multiplier and Divider/Multiply-Accumulator **624**

16.2 Configuration of Multiplier and Divider/Multiply-Accumulator **624**

16.2.1 Multiplication/division data register A (MDAH, MDAL) 626

16.2.2 Multiplication/division data register B (MDBL, MDBH) 627

16.2.3 Multiplication/division data register C (MDCL, MDCH) 628

16.3 Register Controlling Multiplier and Divider/Multiply-Accumulator **630**

16.3.1 Multiplication/division control register (MDUC) 630

16.4 Operations of Multiplier and Divider/Multiply-Accumulator **632**

16.4.1 Multiplication (unsigned) operation 632

16.4.2 Multiplication (signed) operation 633

16.4.3 Multiply-accumulation (unsigned) operation 634

16.4.4 Multiply-accumulation (signed) operation 636

16.4.5 Division operation 638

CHAPTER 17 DMA CONTROLLER **640**

17.1 Functions of DMA Controller 640
17.2 Configuration of DMA Controller 641
17.2.1 DMA SFR address register n (DSAn) 641
17.2.2 DMA RAM address register n (DRAn) 642
17.2.3 DMA byte count register n (DBCn) 643
17.3 Registers Controlling DMA Controller 644
17.3.1 DMA mode control register n (DMCn) 645
17.3.2 DMA operation control register n (DRCn) 648
17.4 Operation of DMA Controller 649
17.4.1 Operation procedure 649
17.4.2 Transfer mode 650
17.4.3 Termination of DMA transfer 650
17.5 Example of Setting of DMA Controller 651
17.5.1 CSI consecutive transmission 651
17.5.2 Consecutive capturing of A/D conversion results 653
17.5.3 UART consecutive reception + ACK transmission 655
17.5.4 Holding DMA transfer pending by DWAITn bit 657
17.5.5 Forced termination by software 658
17.6 Cautions on Using DMA Controller 660

CHAPTER 18 INTERRUPT FUNCTIONS 663

18.1 Interrupt Function Types 663
18.2 Interrupt Sources and Configuration 664
18.3 Registers Controlling Interrupt Functions 669
18.3.1 Interrupt request flag registers (IF0L, IF0H, IF1L, IF1H, IF2L, IF2H, IF3L) 671
18.3.2 Interrupt mask flag registers (MK0L, MK0H, MK1L, MK1H, MK2L, MK2H, MK3L) 673
18.3.3 Priority specification flag registers (PR00L, PR00H, PR01L, PR01H, PR02L, PR02H, PR03L, PR10L, PR10H, PR11L, PR11H, PR12L, PR12H, PR13L) 675
18.3.4 External interrupt rising edge enable registers (EGP0), external interrupt falling edge enable registers (EGN0) 678
18.3.5 Program status word (PSW) 679
18.4 Interrupt Servicing Operations 680
18.4.1 Maskable interrupt request acknowledgment 680
18.4.2 Software interrupt request acknowledgment 683
18.4.3 Multiple interrupt servicing 683
18.4.4 Interrupt request hold 687

CHAPTER 19 STANDBY FUNCTION 688

19.1 Standby Function 688
19.2 Registers Controlling Standby Function 689
19.3 Standby Function Operation 689

19.3.1 HALT mode 689
19.3.2 STOP mode 694
19.3.3 SNOOZE mode 699

CHAPTER 20 RESET FUNCTION 702

20.1 Timing of Reset Operation 704
20.2 States of Operation During Reset Periods 706
20.3 Register for Confirming Reset Source 708
20.3.1 Reset control flag register (RESF) 708

CHAPTER 21 POWER-ON-RESET CIRCUIT 711

21.1 Functions of Power-on-reset Circuit 711
21.2 Configuration of Power-on-reset Circuit 712
21.3 Operation of Power-on-reset Circuit 712

CHAPTER 22 VOLTAGE DETECTOR 716

22.1 Functions of Voltage Detector 716
22.2 Configuration of Voltage Detector 717
22.3 Registers Controlling Voltage Detector 717
22.3.1 Voltage detection register (LVIM) 718
22.3.2 Voltage detection level register (LVIS) 719
22.4 Operation of Voltage Detector 722
22.4.1 When used as reset mode 722
22.4.2 When used as interrupt mode 724
22.4.3 When used as interrupt & reset mode 726
22.5 Cautions for Voltage Detector 732

CHAPTER 23 SAFETY FUNCTIONS 734

23.1 Overview of Safety Functions 734
23.2 Registers Used by Safety Functions 735
23.3 Operation of Safety Functions 735
23.3.1 Flash memory CRC operation function (high-speed CRC) 735
23.3.1.1 Flash memory CRC control register (CRC0CTL) 735
23.3.1.2 Flash memory CRC operation result register (PGCRCL) 737
23.3.2 CRC operation function (general-purpose CRC) 739
23.3.2.1 CRC input register (CRCIN) 739
23.3.2.2 CRC data register (CRCD) 740
23.3.3 RAM parity error detection function 741
23.3.3.1 RAM parity error control register (RPECTL) 741
23.3.4 RAM guard function 743
23.3.4.1 Invalid memory access detection control register (IAWCTL) 743

23.3.5 SFR guard function 744
23.3.5.1 Invalid memory access detection control register (IAWCTL) 744
23.3.6 Invalid memory access detection function 745
23.3.6.1 Invalid memory access detection control register (IAWCTL) 746
23.3.7 Frequency detection function 747
23.3.7.1 Timer input select register 0 (TIS0) 748
23.3.8 A/D test function 749
23.3.8.1 A/D test register (ADTES) 751
23.3.8.2 Analog input channel specification register (ADS) 752

CHAPTER 24 REGULATOR 753

24.1 Regulator Overview 753

CHAPTER 25 OPTION BYTE 754

25.1 Functions of Option Bytes 754
25.1.1 User option byte (000C0H to 000C2H/010C0H to 010C2H) 754
25.1.2 On-chip debug option byte (000C3H/ 010C3H) 755
25.2 Format of User Option Byte 756
25.3 Format of On-chip Debug Option Byte 761
25.4 Setting of Option Byte 762

CHAPTER 26 FLASH MEMORY 763

26.1 Serial Programming Using Flash Memory Programmer 765
26.1.1 Programming environment 766
26.1.2 Communication mode 766
26.2 Serial Programming Using External Device (that Incorporates UART) 767
26.2.1 Programming environment 767
26.2.2 Communication mode 768
26.3 Connection of Pins on Board 769
26.3.1 P40/TOOL0 pin 769
26.3.2 $\overline{\text{RESET}}$ pin 769
26.3.3 Port pins 770
26.3.4 REGC pin 770
26.3.5 X1 and X2 pins 770
26.3.6 Power supply 770
26.4 Serial Programming Method 771
26.4.1 Serial programming procedure 771
26.4.2 Flash memory programming mode 772
26.4.3 Selecting communication mode 774
26.4.4 Communication commands 774
26.5 Processing Time for Each Command When PG-FP5 Is in Use (Reference Value) 776

26.6 Self-Programming 777
26.6.1 Self-programming procedure 778
26.6.2 Boot swap function 779
26.6.3 Flash shield window function 781
26.7 Security Settings 782
26.8 Data Flash 784
26.8.1 Data flash overview 784
26.8.2 Register controlling data flash memory 785
26.8.3 Procedure for accessing data flash memory 786

CHAPTER 27 ON-CHIP DEBUG FUNCTION 787

27.1 Connecting E1 On-chip Debugging Emulator 787
27.2 On-Chip Debug Security ID 788
27.3 Securing of User Resources 788

CHAPTER 28 BCD CORRECTION CIRCUIT 790

28.1 BCD Correction Circuit Function 790
28.2 Registers Used by BCD Correction Circuit 790
28.3 BCD Correction Circuit Operation 791

CHAPTER 29 INSTRUCTION SET 793

29.1 Conventions Used in Operation List 793
29.1.1 Operand identifiers and specification methods 793
29.1.2 Description of operation column 794
29.1.3 Description of flag operation column 795
29.1.4 PREFIX instruction 795
29.2 Operation List 796

CHAPTER 30 ELECTRICAL SPECIFICATIONS 813

30.1 Absolute Maximum Ratings 814
30.2 Operating Voltage 816
30.3 Oscillator Characteristics 817
30.3.1 X1, XT1, XRF oscillator characteristics 817
30.3.2 On-chip oscillator characteristics 818
30.4 DC Characteristics 819
30.4.1 Output current 819
30.4.2 Input current 820
30.4.3 Output voltage 821
30.4.4 Input leakage current 822
30.4.5 Resistance 822

30.5 Current Consumption 823
30.5.1 MCU 823
30.5.2 RF unit 828
30.6 AC Characteristics 829
30.7 Peripheral Functions Characteristics 833
30.7.1 Serial array unit 833
30.7.2 Serial interface IICA 858
30.8 Analog Characteristics 862
30.8.1 A/D converter characteristics 862
30.8.2 Temperature sensor and internal reference voltage characteristics 866
30.8.3 POR circuit characteristics 866
30.8.4 LVD circuit characteristics 867
30.8.5 Supply voltage rise time 868
30.9 RF Transceiver Characteristics 869
30.9.1 RF transmission characteristics 869
30.9.2 RF reception characteristics 870
30.9.3 Performance mapping for typical RF (Reference) 871
30.10 RAM Data Retention Characteristics 876
30.11 Flash Memory Programming Characteristics 876
30.12 Special Flash Memory Programming Communication (UART) 876
30.13 Timing of Entry to Flash Memory Programming Modes 877

CHAPTER 31 PACKAGE DRAWINGS 878

31.1 48-pin plastic WQFN (6 × 6) 878

APPENDIX A REVISION HISTORY 879

A.1 Major Revisions in This Edition 879
A.2 Revision History of Preceding Editions 880

CHAPTER 1 OUTLINE

The RL78/G1D is a microcomputer incorporating the RL78 CPU core and low power consumption RF transceiver supporting the Bluetooth ver.4.1 (Low Energy Single mode) specifications.

1.1 Features

Ultra-low power consumption technology

- MCU part Standby function HALT mode, STOP mode, SNOOZE mode
- RF part Standby function POWER_DOWN mode, RESET_RF mode, STANDBY_RF mode, IDLE_RF mode, DEEP_SLEEP mode, SLEEP_RF mode
- RF transmission (RF normal mode) : 4.3 mA (TYP.) (3.0 V/MCU part: STOP mode)
  (RF Low power mode) : 2.6 mA (TYP.) (3.0 V/MCU part: STOP mode)
- RF reception (RF normal mode) : 3.5 mA (TYP.) (3.0 V/MCU part: STOP mode)
  (RF Low power mode) : 3.3 mA (TYP.) (3.0 V/MCU part: STOP mode)
- RF sleep (POWER_DOWN mode) operation : 0.10 μA (TYP.) (3.0 V/MCU part: STOP mode)

RL78 CPU core

- CISC architecture with 3-stage pipeline
- Minimum instruction execution time: Can be changed from high speed (0.03125 μs: @ 32 MHz operation with high-speed on-chip oscillator) to ultra-low speed (30.5 μs: @ 32.768 kHz operation with subsystem clock)
- Address space: 1 MB
- General-purpose registers: (8-bit register × 8) × 4 banks
- On-chip RAM: 12 to 20 KB

On-chip RF transceiver

- Bluetooth v4.1 Specification (Low Energy Single mode)
- 2.4 GHz ISM band, GFSK modulation, TDMA/TDD frequency hopping (including AES encryption circuit)
- Adaptivity, exclusively for use in operation as a slave device

Code flash memory

- Code flash memory: 128 to 256 KB
- Block size: 1 KB
- Prohibition of block erase and rewriting (security function)
- On-chip debug function
- Self-programming (with boot swap function/flash shield window function)

Data flash memory

- Data flash memory: 8 KB
- Back ground operation (BGO): Instructions can be executed from the program memory while rewriting the data flash memory.
- Number of rewrites: 1,000,000 times (TYP.)
- Voltage of rewrites: V_{DD} = 1.8 to 3.6 V

High-speed on-chip oscillator

- Select from 32 MHz, 24 MHz, 16 MHz, 12 MHz, 8 MHz, 6 MHz, 4 MHz, 3 MHz, 2 MHz, and 1 MHz
- High accuracy: ±1.0 % (V_{DD} = 1.8 to 3.6 V, T_A = -20 to +85 °C)

Low-speed on-chip oscillator

- 15 kHz (TYP.)

On-chip oscillator for the RF slow clock

- 32.768 kHz (TYP.)

Operating ambient temperature

- T_A = -40 to +85°C (A: Consumer applications, D: Industrial applications)

Power management and reset function

- On-chip power-on-reset (POR) circuit
- On-chip voltage detector (LVD) (Select interrupt and reset from 12 levels)

DMA (Direct Memory Access) controller

- 4 channels
- Number of clocks during transfer between 8/16-bit SFR and internal RAM: 2 clocks

Multiplier and divider/multiply-accumulator

- 16 bits × 16 bits = 32 bits (Unsigned or signed)
- 32 bits ÷ 32 bits = 32 bits (Unsigned)
- 16 bits × 16 bits + 32 bits = 32 bits (Unsigned or signed)

Serial interface

- CSI: 2 channels
- UART: 2 channels
- I^2C/Simplified I^2C: 3 channels

Timer

- 16-bit timer: 8 channels
- 12-bit interval timer: 1 channel
- Real-time clock: 1 channel (calendar for 99 years, alarm function, and clock correction function)
- Watchdog timer: 1 channel (operable with the dedicated low-speed on-chip oscillator)

A/D converter

- 8/10-bit resolution A/D converter (V_{DD} = 1.6 to 3.6 V)
- Analog input: 8 channels
- Internal reference voltage (1.45 V) and temperature sensor[Note]

I/O port

- I/O port: 32 (N-ch open drain I/O [withstand voltage of 6 V]: 2, N-ch open drain I/O [V_{DD} withstand voltage]: 9
- Can be set to N-ch open drain, TTL input buffer, and on-chip pull-up resistor
- Different potential interface: Can connect to a 1.8/2.5 V device
- On-chip clock output/buzzer output controller

Others

- On-chip BCD (binary-coded decimal) correction circuit

Note Can be selected only in HS (high-speed main) mode

- ROM, RAM capacities

Flash ROM	Data Flash	RAM	RL78/G1D
128 KB	8 KB	12 KB	R5F11AGG
192 KB	8 KB	16 KB	R5F11AGH
256 KB	8 KB	20 KB[Note]	R5F11AGJ

Note 19 KB when the self-programming function is used (for details, see **CHAPTER 4**).

1.2 List of Part Numbers

Figure 1-1. Part Number, Memory Size, and Package of RL78/G1D

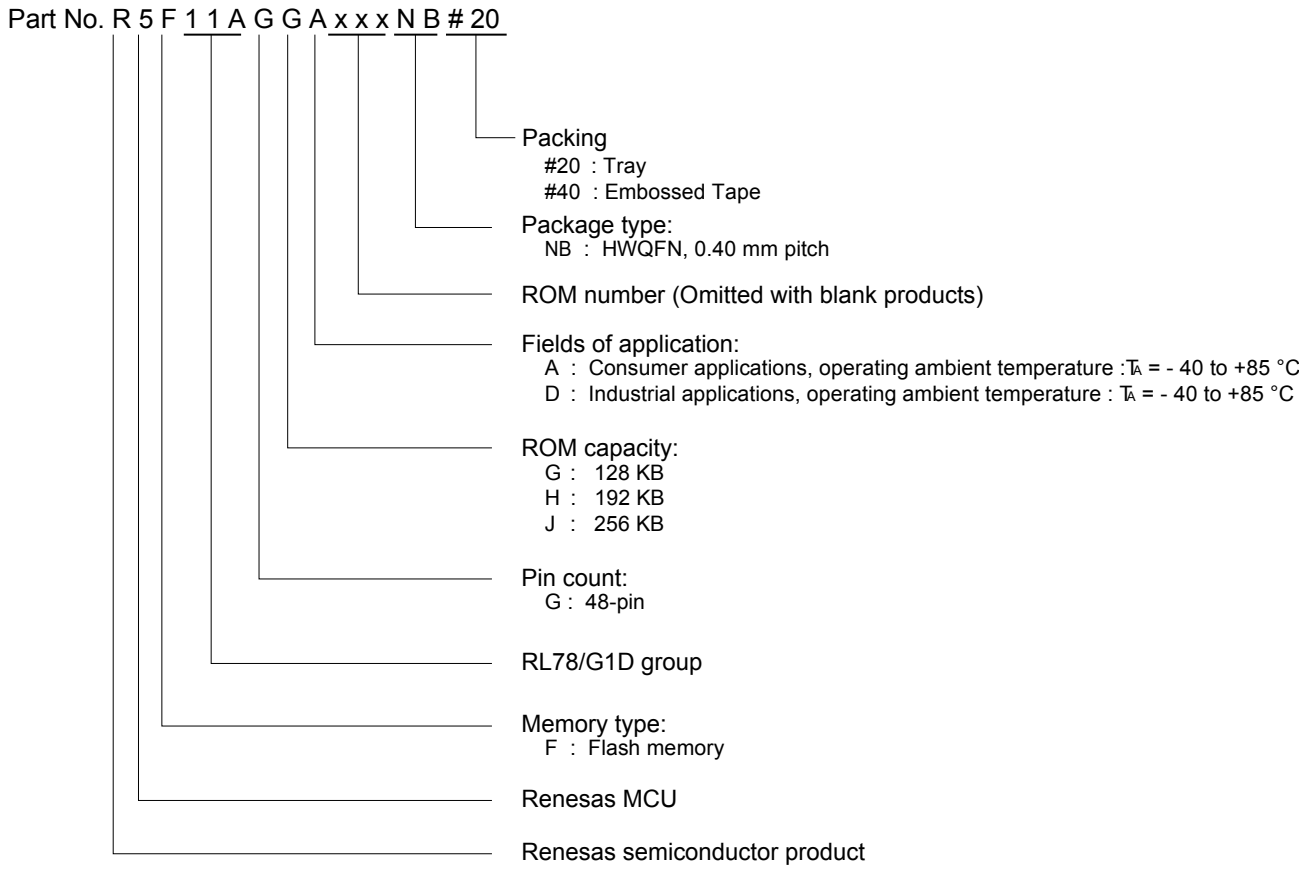

Table 1-1. List of Ordering Part Numbers

Pin count	Package	Fields of Application[Note]	Ordering Part Number	Code Flash Memory	Data Flash Memory
48 pins	Plastic WQFN (6 × 6)	A	R5F11AGGANB#20 R5F11AGGANB#40	128 KB	8 KB
		D	R5F11AGGDNB#20 R5F11AGGDNB#40		
		A	R5F11AGHANB#20 R5F11AGHANB#40	192 KB	8 KB
		D	R5F11AGHDNB#20 R5F11AGHDNB#40		
		A	R5F11AGJANB#20 R5F11AGJANB#40	256 KB	8 KB
		D	R5F11AGJDNB#20 R5F11AGJDNB#40		

Note For the fields of application, see **Figure 1-1 Part Number, Memory Size, and Package of RL78/G1D**.

Caution The ordering part numbers represent the numbers at the time of publication. For the latest ordering part numbers, refer to the target product page of the Renesas Electronics website.

1.3 Pin Configuration (Top View)

<R> ● 48-pin plastic WQFN (6 × 6 mm, 0.4 mm pitch)

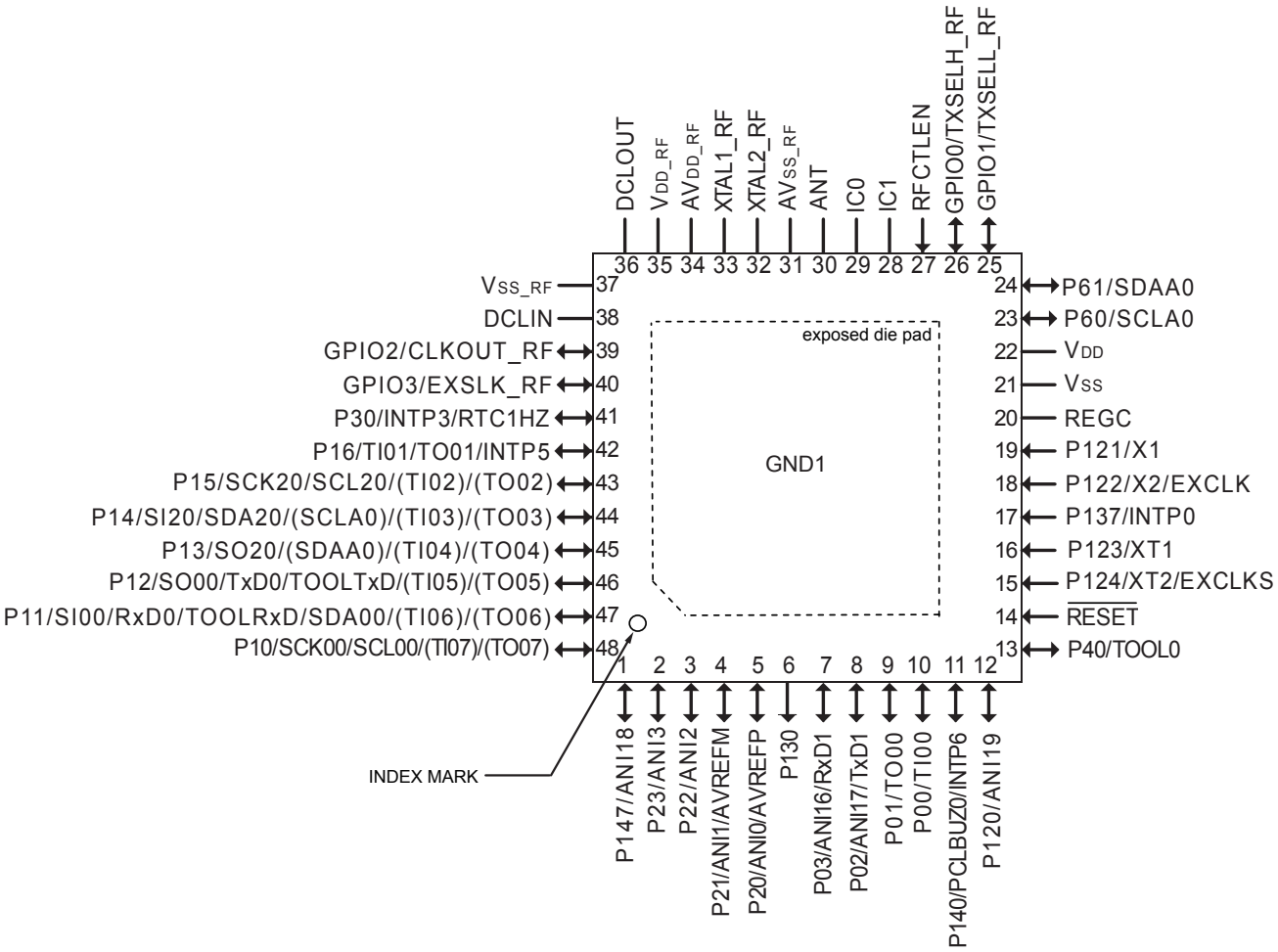

Cautions 1. Connect the REGC pin to Vss via a capacitor (0.47 to 1μF).

2. Connect the metal pad (GND1) on the back of the package that has the same potential as AV_{SS_RF}.

Remarks 1. For pin identification, see **1.4 Pin Identification**.

2. Functions in parentheses in the above figure can be assigned via settings in the peripheral I/O redirection register (PIOR). See **Figure 5-8 Format of Peripheral I/O Redirection Register (PIOR)**.

1.4 Pin Identification

ANI0 to ANI3, ANI16 to ANI19:	Analog input
ANT:	Antenna connection
AV_{DD_RF}:	Power supply for RF analog
AV_{REFM}:	Analog reference voltage minus
AV_{REFP}:	Analog reference voltage plus
AV_{SS_RF}:	Ground for RF analog
CLKOUT_RF:	Clock output
DCLIN:	DC-DC converter inductor and DCLOUT capacitor
DCLOUT:	DC-DC converter output
EXCLK:	External clock input (Main system clock)
EXCLKS:	External clock input (Subsystem clock)
EXSLK_RF:	External slow clock input
GND1:	Package exposed die pad
GPIO0 to GPIO3:	GPIO at RF unit
IC0, IC1:	Internal circuit
INTP0, INTP3, INTP5, INTP6:	External interrupt input
P00 to P03:	Port 0
P10 to P16:	Port 1
P20 to P23:	Port 2
P30:	Port 3
P40:	Port 4
P60, P61:	Port 6
P120 to P124:	Port 12
P130, P137:	Port 13
P140, P147:	Port 14
PCLBUZ0:	Programmable clock output/buzzer output
REGC:	Regulator capacitance
RFCTLEN:	RF control enable
RTC1HZ:	Real-time clock correction clock (1 Hz) output
$\overline{RESET}$:	Reset
RxD0, RxD1:	Receive data
SCLA0:	Serial clock input/output
SCK00, SCK20, SCL00, SCL20:	Serial clock output
SDAA0, SDA00, SDA20:	Serial data input/output
SI00, SI20:	Serial data input
SO00, SO20:	Serial data output
TI00 to TI07:	Timer input
TO00 to TO07:	Timer output
TOOL0:	Data input/output for tool
TOOLRxD, TOOLTxD:	Data input/output for external device
TxD0, TxD1:	Transmit data
TXSELL_RF, TXSELH_RF:	External PA/LNA control
V_{DD}:	Power supply
V_{DD_RF}:	Power Supply for RF
V_{SS}:	Ground
V_{SS_RF}:	Ground for RF
X1, X2:	Crystal oscillator (Main system clock)
XT1, XT2:	Crystal oscillator (Subsystem clock)
XTAL1_RF, XTAL2_RF:	Crystal oscillator (RF clock)

1.5 Block Diagram

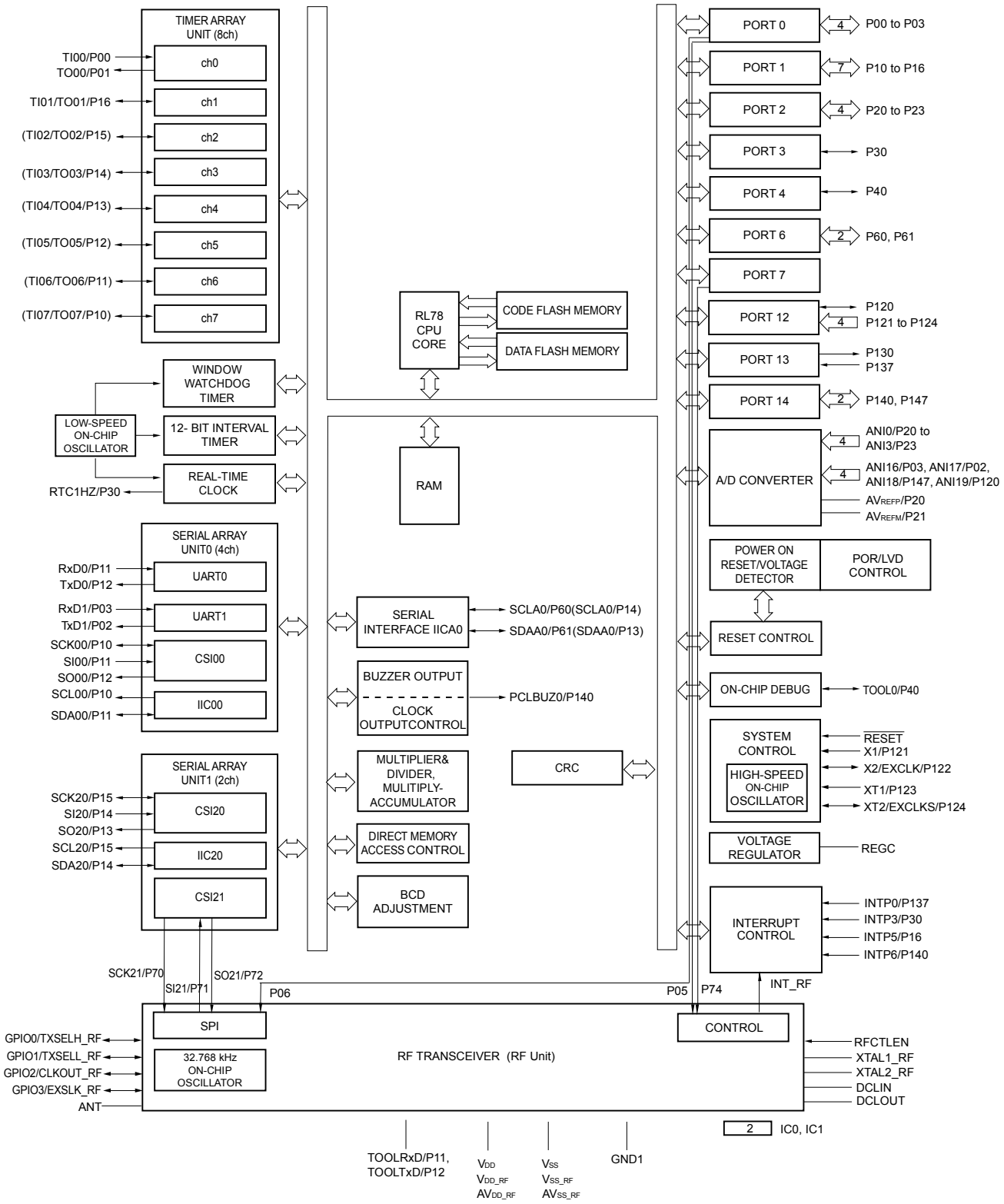

Remark Functions in parentheses in the above figure can be assigned via settings in the peripheral I/O redirection register (PIOR). Refer to **Figure 5-8 Format of Peripheral I/O Redirection Register (PIOR)**.

1.6 Outline of Functions

Caution This outline describes the functions at the time when Peripheral I/O redirection register (PIOR) is set to 00H.

(1/2)

Item		R5F11AGG	R5F11AGH	R5F11AGJ
Code flash memory		128 KB	192 KB	256 KB
Data flash memory		8 KB	8 KB	8 KB
RAM		12 KB	16 KB	20 KB[Note 1]
Address space		1 MB		
System clock (RF side)		32 MHz		
Main system clock	High-speed system clock	X1 (crystal/ceramic) oscillation, external main system clock input (EXCLK) HS (High-speed main) mode: 1 to 20 MHz (V_{DD} = 2.7 to 3.6 V), HS (High-speed main) mode: 1 to 16 MHz (V_{DD} = 2.4 to 3.6 V), LS (Low-speed main) mode: 1 to 8 MHz (V_{DD} = 1.8 to 3.6 V), LV (Low-voltage main) mode: 1 to 4 MHz (V_{DD} = 1.6 to 3.6 V)		
	High-speed on-chip oscillator	HS (High-speed main) mode: 1 to 32 MHz (V_{DD} = 2.7 to 3.6 V), HS (High-speed main) mode: 1 to 16 MHz (V_{DD} = 2.4 to 3.6 V), LS (Low-speed main) mode: 1 to 8 MHz (V_{DD} = 1.8 to 3.6 V), LV (Low-voltage main) mode: 1 to 4 MHz (V_{DD} = 1.6 to 3.6 V)		
Subsystem clock		XT1 (Crystal) oscillation, External main system clock input (EXCLKS) 32.768 kHz		
RF slow clock	External input	External clock input for RF block (EXSLK_RF) 32.768 kHz (TYP.)		
	On-chip Oscillator	32.768 kHz (TYP.)		
Low-speed on-chip oscillator		15 kHz (TYP.)		
General-purpose register		(8-bit register × 8) × 4 banks		
Minimum instruction execution time		0.03125 μs (High-speed on-chip oscillation clock: f_{IH} = 32 MHz operation)		
		0.05 μs (High-speed system clock: f_{MX} = 20 MHz operation)		
		30.5 μs (Subsystem clock: f_{SUB} = 32.768 kHz operation)		
Instruction set		● Data transfer (8/16 bits) ● Adder and subtractor/logical operation (8/16 bits) ● Multiplication (8 bits × 8 bits) ● Rotate, barrel shift, and bit manipulation (Set, reset, test, and Boolean operation), etc.		
I/O port	Total	32[Note 2]		
	CMOS I/O	20[Note 2]		
	CMOS input	5[Note 2]		
	CMOS output	1[Note 2]		
	N-ch O.D. I/O (withstand voltage: 6 V)	2		
	GPIO (RF block)	4		
2.4 GHz RF transceiver		Supporting Bluetooth v4.1 Specification (Single mode). 2.4 GHz ISM Band, GFSK modulation, TDMA/TDD frequency hopping (Including AES encryption circuit.) Adaptivity (Only in slave operation)		
Timer	16-bit timer	8 channels		
	Watchdog timer	1 channel		
	Real-time clock (RTC)	1 channel		
	12-bit interval timer	1 channel		

(Notes are listed on the next page.)

Notes 1. This is about 19 KB when the self-programming function is used.

2. When RF is used, this count includes the pins that connect the MCU with the RF transceiver by the user externally on the board.

(2/2)

Item		R5F11AGG	R5F11AGH	R5F11AGJ
Timer	Timer output	8 channels (PWM outputs: 7[Note 1])[Note 2]		
	RTC output	1 channel 1 Hz (subsystem clock: f_{SUB} = 32.768 kHz)		
Clock output/buzzer output		1[Note 3]		
		● 2.44 kHz, 4.88 kHz, 9.76 kHz, 1.25 MHz, 2.5 MHz, 5 MHz, 10 MHz (Main system clock: f_{MAIN} = 20 MHz operation) ● 256 Hz, 512 Hz, 1.024 kHz, 2.048 kHz, 4.096 kHz, 8.192 kHz, 16.384 kHz, 32.768 kHz (Subsystem clock: f_{SUB} = 32.768 kHz operation)		
	RF unit (Clock output)	● 16 MHz, 8 MHz, 4 MHz		
8/10-bit resolution A/D converter		8 channels		
Serial interface		● CSI/simplified I^2C/UART: 1 channel ● CSI/simplified I^2C: 1 channel ● UART: 1 channel ● CSI: 1 channel (dedicated for internal communications)		
	I^2C bus	1 channel		
Multiplier and divider/multiply-accumulator		Multiplication: 16 bits × 16 bits = 32 bits (Unsigned or signed) Division: 32 bits ÷ 32 bits = 32 bits (Unsigned) Multiply-accumulate: 16 bits × 16 bits + 32 bits = 32 bits (Unsigned or signed)		
DMA controller		4 channels		
Vectored interrupt sources	Internal	29		
	External	4		
Reset		● Reset by RESET pin ● Internal reset by watchdog timer ● Internal reset by power-on-reset ● Internal reset by voltage detector ● Internal reset by illegal instruction execution[Note 4] ● Internal reset by RAM parity error ● Internal reset by illegal-memory access		
Power-on-reset circuit		● Power-on-reset: 1.51 (TYP.) ● Power-down-reset: 1.50 (TYP.)		
Voltage detector		● Rising edge : 1.67 V to 3.13 V (12 stages) ● Falling edge : 1.63 V to 3.06 V (12 stages)		
On-chip debug function		Provided		
Power supply voltage		V_{DD} = 1.6 to 3.6 V (V_{DD} =1.8 to 3.6 V on usage of DC-DC converter)		
Operating ambient temperature		T_A = -40 to +85 °C		
Package		48-pin QFN (6 × 6), (0.4 mm pitch)		

Notes 1. The number of outputs varies, depending on the setting of channels in use and the number of the master (see **7.9.3 Operation as multiple PWM output function**).

2. When setting to PIOR0 = 1

3. When RF is used, this count includes the pins that connect the MCU with the RF transceiver by the user externally on the board.

4. The illegal instruction is generated when instruction code FFH is executed. Reset by the illegal instruction execution not issued by emulation with the on-chip debug emulator.

CHAPTER 2 CONNECTION BETWEEN MCU AND RF TRANSCEIVER

2.1 Connection Pins of MCU and RF Transceiver

This product consists of two units, an MCU (the part of the product other than the RF unit) and an RF unit (RF transceiver). The two units need to be internally and externally connected. Therefore, handling of internal pins between two units and internally settings for communications are required. The MCU controls the RF unit through SPI communications.

Table 2-1 lists the pins connected inside the RL78/G1D. Table 2-2 lists the pins which the user needs to connect on the board for normal Bluetooth Low Energy operation.

These pins require initial settings for the appropriate modes and levels using the Bluetooth Low Energy software stack from Renesas before communications with another RF transceiver can start.

Table 2-1. Internal Pin Connection

Pin Name		Function	Direction
MCU unit	RF unit		
P05	$\overline{\text{RESET\_RF}}$	Hardware reset signal for the RF unit (baseband unit). When $\overline{\text{RESET\_RF}}$ is at the low level, the RF unit (baseband unit) enters the reset state. $\overline{\text{RESET\_RF}}$ is controlled by P05 which is an internal port of the MCU.	MCU → RF transceiver
P06	CE_RF	Chip select signal of the RF unit. When CE_RF is at the high level, the RF unit is enabled. CE_RF is controlled by P06 which is an internal port of the MCU.	MCU → RF transceiver
P70/SCK21	SCK_RF	Operation clock of the SPI interface used for internal communication between the MCU and RF unit. Since it is dedicated to internal communication, it cannot be used for communication with external modules.	MCU → RF transceiver
P71/SI21	SO_RF	Data (MCU: input data, RF unit: output data) of the SPI interface used for internal communication between the MCU and RF unit. Since it is dedicated to internal communication, it cannot be used for communication with external modules.	RF transceiver → MCU
P72/SO21	SI_RF	Data (MCU: output data, RF unit: input data) of the SPI interface used for internal communication between the MCU and RF unit. Since it is dedicated to internal communication, it cannot be used for communication with external modules.	MCU → RF transceiver
P74	$\overline{\text{SPIEN\_RF}}$	Communication enable control signal for the SPI interface (RF unit) used for internal communication between the MCU and RF unit. $\overline{\text{SPIEN\_RF}}$ is an active-low (SPI communication enabled) signal. $\overline{\text{SPIEN\_RF}}$ is controlled by P74 which is an internal port of the MCU.	MCU → RF transceiver
P75	DCDCOFF	Controls whether the DC-DC converter incorporated in RF unit is used or not. Low level of DCDCOFF specifies DC-DC converter is used, and the high level specifies unused. DCDCOFF is controlled by P75 which is an internal port of the MCU block.	MCU → RF transceiver
P76	EXT32K	Controls whether On-chip oscillator for the RF slow clock incorporated in RF unit is used or not. When using On-chip oscillator for the RF slow clock incorporated in RF unit, use the EXT32K in low level. When On-chip oscillator for the RF slow clock incorporated in the RF unit is not used, use the EXT32K in high level. The 32-kHz clock shall be supplied externally (EXSLK_RF pin).	MCU → RF transceiver
P77/INTRF	INTOUT_RF	When an interrupt source is generated in the RF unit, that status is output from the INTOUT_RF pin. The INTOUT_RF pin is connected to the INTRF pin internally. Thus the MCU can accept the interrupt status.	RF transceiver → MCU

Table 2-2. Pins Externally Connected on User Board

Pin Name		Function	Direction
MCU unit	RF unit		
P130	RFCTLEN	Control signal (high: enabled, low: disabled) for the RF unit. This signal is used together with the reset release (P130 pin signal changes from low to high) of the MCU to control the RF unit. When this control signal is disabled, power is not supplied to the internal circuit of the RF unit and so functions installed in the RF unit do not operate.	MCU → RF transceiver
P140/ PCLBUZ0/INTP6	GPIO3/EXSLK_RF	When the on-chip oscillator for the RF slow clock is not used (EXT32 is high level), these pins must be connected, because the RF slow clock must be supplied externally. The clock output from PCLBUZ0 (sub-system clock output) pin is supplied to EXSLK_RF pin as the RF slow clock.	MCU → RF transceiver

2.2 Communication Interface Between MCU and RF Transceiver

3-wire serial I/O (CSI) is used for the SPI interface for internal communication between the MCU and RF unit. For data transfer between the MCU and RF unit, a transfer clock is output from the MCU to the RF unit and data is transmitted and received. The operation of the 3-wire serial I/O (CSI) is shown in Table 2-3.

Table 2-3. 3-Wire Serial I/O Between MCU and RF Transceiver

3-Wire Serial I/O	CSI21 (for communication between MCU and RF transceiver)
Target channel	Channel 1 of SAU1
Pins used	SCK21, SI21, SO21 (internal connection pin for communication), and P74 (internal connection pin for control of the $\overline{\text{SPIEN\_RF}}$ pin (active low) in the RF unit)
Operation mode	Transmission mode or transmission/reception mode
Master/slave	Master
Interrupt	INTCSI21
	Transfer end interrupt (in single-transfer mode) or buffer empty interrupt (in continuous transfer mode) can be selected.
Error detection flag	Overrun error detection flag (OVF21)
Transfer data length	8 bits.
Transfer rate	Within the range that satisfies the AC characteristics of the electrical specifications
Data phase	Type 1 (see the format of serial communication operation setting register mn (SCRmn))
Clock phase	Type 1 (see the format of serial communication operation setting register mn (SCRmn))
Data direction	MSB first

Caution Use the RL78/G1D so that these conditions and the specifications of the AC characteristics (CHAPTER 30 ELECTRICAL SPECIFICATIONS) are satisfied.

2.3 Initial Settings of Unused Internal Pins of MCU

After release from the reset state, the following internal pins of the MCU need to be set for output mode (set the port registers and port mode registers to 0) by software. Using the Bluetooth Low Energy software stack from Renesas leads to the appropriate initial settings being made.

P04, P17, P31, P41 to P43, P50 to P55, P62, P63, P73, P141, P146

2.4 Operation Clock of Bluetooth Low Energy

Bluetooth Low Energy operation requires a high-speed 32-MHz clock which is used as the RF base clock for the RF internal circuits and a low-speed 32.768-kHz clock (RF slow clock).

A crystal oscillator is externally connected to generate the 32-MHz signal for the high-speed RF base clock. Either the on-chip oscillator in the RF unit or the input of a square wave to the EXSLK_RF pin can be used to obtain the low-speed RF slow clock. In the case of square wave input to the EXSLK_RF pin, the Bluetooth Low Energy software stack from Renesas sets up sub-clock output through the PCLBUZ0 pin to provide a square wave for input to EXSLK_RF, so the PCLBUZ0 pin and EXSLK_RF pin must be connected on the user board.

Tables 2-4 and 2-5 show the clock resonator connection and Figures 2-1 and 2-2 show the clock configuration.

Table 2-4. Clock Resonator Connection (Using the On-chip Oscillator as the RF Slow Clock)

Pin Name	Function
XTAL1_RF	Base clock of the RF unit. Connect a 32 MHz crystal resonator. A resister of 6.8 MΩ ± 5% must be inserted between XTAL1_RF pin and GND (AV_{SS_RF} pin).
XTAL2_RF	
P123/XT1	—
P124/XT2/EXCLKS	

Figure 2-1. Clock Configuration (Using the On-chip Oscillator as the RF Slow Clock)

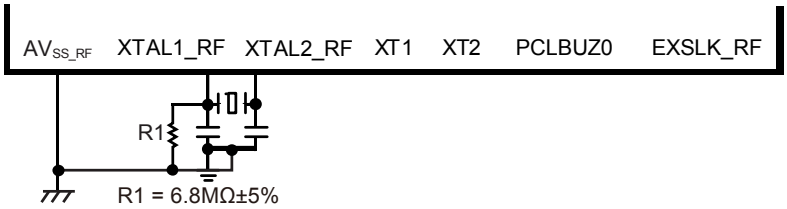

Caution This figure only shows connection between the clock resonator pins and clock line.

Table 2-5. Clock Resonator Connection (Using Square Wave Input for the RF Slow Clock)

Pin Name	Function
XTAL1_RF	Base clock of the RF unit. Connect a 32 MHz crystal resonator. A resister of 6.8 MΩ ± 5% must be inserted between XTAL1_RF pin and GND (AV_{SS_RF} pin).
XTAL2_RF	
P123/XT1	Slow clock for controlling the communication timing. Connect a 32.768 kHz crystal resonator.
P124/XT2/EXCLKS	

Figure 2-2. Clock Configuration (Using Square Wave Input for the RF Slow Clock)

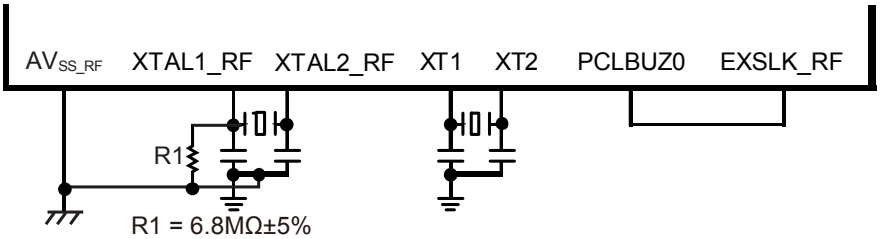

Caution This figure only shows connection between the clock resonator pins and clock line.

2.5 Power Configuration

Power is supplied to both the MCU and the RF unit. The RF unit includes a DC-DC converter. Whether to use the DC-DC converter or not is selectable, so the user is able to select the configuration that suits the user application. The power switched at the DC-DC converter is output to the DCLOUT pin. The power is smoothed by an inductor and capacitor to step down the voltage, and then supplied to the DCLIN. Figure 2-3 shows the power configuration of the RL78/G1D.

Figure 2-3. Power Configuration

<R> (a) When DC-DC converter is used

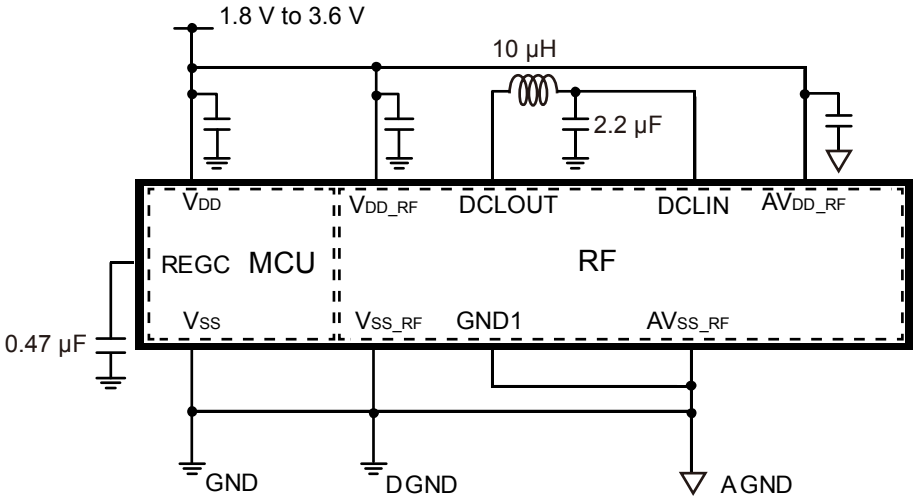

(b) When DC-DC converter is not used

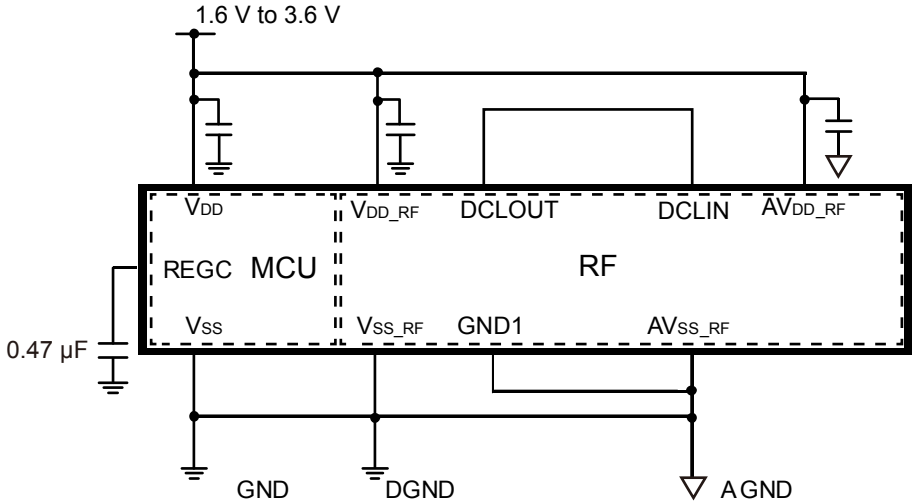

<R> **Cautions 1. Please implement control measures to suppress noise at RF power supplies (V_{DD_RF}, AV_{DD_RF}) as low as possible. Especially, in case of using a switching supply for the power supply, appropriate control measures depending on the device and system of the customer might be needed for the periodical noise of the power supply. In such cases, customer shall validate that the device and system of the customer works without problem.**

2. This figure only shows the power line.

CHAPTER 3 PIN FUNCTIONS

3.1 Pin Functions

The relationship between these power supplies and the pins is shown below.

Table 3-1. Pin I/O Buffer Power Supplies

Power Supply	Corresponding Pins
V_{DD}	● P00 to P03, P10 to P16, P20 to P23, P30, P40, P60, P61, P120 to P124, P130, P137, P140, and P147 ● $\overline{\text{RESET}}$, REGC
<R> V_{DD_RF}	GPIO0, GPIO1, GPIO2, GPIO3, RFCTLEN

The I/O, buffer, and pull-up resistor settings for each port is also valid for alternate functions.

(1/2)

Function Name	Pin Type	I/O	After Reset	Alternate Function	Function
P00	7-1-2	I/O	Input port	TI00	Port 0. 4-bit I/O port. Input/output can be specified in 1-bit units. Use of an on-chip pull-up resistor can be specified by a software setting at input port. Input of P01 and P03 can be set to TTL input buffer. Output of P00, P02, and P03 can be set to N-ch open-drain output (V_{DD} tolerance). P02 and P03 can be set to analog input[Note 1].
P01	8-1-1			TO00	
P02	7-3-2		Analog input port	ANI17/TxD1	
P03	8-3-2			ANI16/RxD1	
P10	8-1-2	I/O	Input port	SCK00/SCL00/(TI07)/(TO07)	Port 1. 7-bit I/O port. Input/output can be specified in 1-bit units. Use of an on-chip pull-up resistor can be specified by a software setting at input port. Input of P10, P11, and P13 to P16 can be set to TTL input buffer. Output of P10 to P15 can be set to N-ch open-drain output (V_{DD} tolerance).
P11				SI00/RxD0/TOOLRxD/SDA00/(TI06)/(TO06)	
P12	7-1-2			SO00/TxD0/TOOLTxD/(TI05)/(TO05)	
P13	8-1-2			SO20/(SDAA0)/(TI04)/(TO04)	
P14				SI20/SDA20/(SCLA0)/(TI03)/(TO03)	
P15				SCK20/SCL20/(TI02)/(TO02)	
P16	8-1-1			TI01/TO01/INTP5	
P20	4-3-1	I/O	Analog input port	ANI0/AV_{REFP}	Port 2. 4-bit I/O port. Input/output can be specified in 1-bit units Can be set to analog input[Note 2].
P21				ANI1/AV_{REFM}	
P22				ANI2	
P23				ANI3	
P30	7-1-1	I/O	Input port	INTP3/RTC1HZ	Port 3. Input/output can be specified in 1-bit units. Use of an on-chip pull-up resistor can be specified by a software setting at input port.
P40	7-1-1	I/O	Input port	TOOL0	Port 4. Input/output can be specified in 1-bit units. Use of an on-chip pull-up resistor can be specified by a software setting at input port.
P60	12-1-1	I/O	Input port	(SCLA0)	Port 6. 2-bit I/O port. Input/output can be specified in 1-bit units. N-ch open-drain output (6V tolerance).
P61				(SDAA0)	

Notes 1. Digital or analog for each pin can be selected with the port mode control register x (PMCx) (can be set in 1-bit unit).

2. Digital or analog for each pin can be selected with the A/D port configuration register (ADPC).

Remark Functions in parentheses in the above figure can be assigned via settings in the peripheral I/O redirection register (PIOR). See **Figure 5-8 Format of Peripheral I/O Redirection Register (PIOR)**.

(2/2)

Function Name	Pin Type	I/O	After Reset	Alternate Function	Function
P120	7-3-1	I/O	Analog input port	ANI19	Port 12. 1-bit I/O port and 4-bit input-only port. For only P120, input/output can be specified. For only P120, use of an on-chip pull-up resistor can be specified by a software setting at input port. P120 can be set to analog input[Note]. When using RF, connecting P123 and P124 to an resonator of 32.768 kHz make the clock can be used as RF slow clock.
P121	2-2-1	Input	Input port	X1	
P122				X2/EXCLK	
P123				XT1	
P124				XT2/EXCLKS	
P130	1-1-1	Output	Output port	—	Port 13. 1-bit output-only port and 1-bit input-only port. When using RF, P130 is used for RF control.
P137	2-1-2	Input	Input port	INTP0	
P140	7-1-1	I/O	Input port	PCLBUZ0/INTP6	Port 14. 2-bit I/O port. Input/output can be specified in 1-bit units. Use of an on-chip pull-up resistor can be specified by a software setting at input port. P147 can be set to analog input[Note].
P147	7-3-1		Analog input port	ANI18	
<R> GPIO0	R-12	I/O	Input port	TXSELH_RF	GPIO port. 4-bit I/O port. Input/output can be specified in 1-bit units.
GPIO1				TXSELL_RF	
GPIO2				CLKOUT_RF	
GPIO3				EXSLK_RF	

Note Digital or analog for each pin can be selected with the port mode control register x (PMCx) (can be set in 1-bit unit).

3.2 Functions Other than Port Pins

(1/2)

Function Name	Pin Type	I/O	Function
ANI0	4-3-1	Input	A/D converter analog input (see **Figure 12-44 Analog Input Pin Connection**)
ANI1	4-3-1		
ANI2	4-3-1		
ANI3	4-3-1		
ANI16	8-3-2		
ANI17	7-3-2		
ANI18	7-3-1		
ANI19	7-3-1		
INTP0	2-1-2	Input	External interrupt input Valid edge: Rising edge, falling edge, or both rising and falling edges
INTP3	7-1-1		
INTP5	8-1-1		
INTP6	7-1-1		
PCLBUZ0	7-1-1	Output	Clock output/buzzer output When using RF, output of sub-system clock can be used as RF slow clock. In this case, connect it to EXSLK_RF pin.
REGC	—	—	Regulator output stabilization capacitor connection for internal operation. Connect REGC to V_{SS} via a capacitor (0.47 to 1 μF). Also, use a capacitor with good characteristics, since it is used to stabilize internal voltage.
RTC1HZ	7-1-1	Output	Real-time clock correction clock (1 Hz) output
$\overline{\text{RESET}}$	2-1-1	Input	This is the active-low system reset input pin. When the external reset pin is not used, connect this pin directly or via a resistor to V_{DD}.
RxD0	8-1-2	Input	Serial data input of serial interface UART0
RxD1	8-3-2		Serial data input of serial interface UART1
TxD0	7-1-2	Output	Serial data output of serial interface UART0
TxD1	7-3-2		Serial data output of serial interface UART1
SCK00, SCK20	8-1-2	I/O	Clock I/O of serial interface CSI00, CSI20
SCL00, SCL20	8-1-2	Output	Clock output of serial interface IIC00, IIC20
SDA00	8-1-2	I/O	Serial data I/O of serial interface IIC00
SDA20	8-3-2		Serial data I/O of serial interface IIC20
SI00	8-1-2	Input	Serial data input of serial interface CSI00
SI20	8-1-2		Serial data input of serial interface CSI20
SO00	7-1-2	Output	Serial data output of serial interface CSI00
SO20	8-1-2		Serial data output of serial interface CSI20
SCLA0	12-1-1	I/O	Serial data output of serial interface IICA0
SDAA0	12-1-1		Serial data I/O of serial interface IICA0
TI00	7-1-2	Input	External count clock/capture trigger input to 16-bit timer 00
TI01	8-1-1	Input	External count clock/capture trigger input to 16-bit timer 01
TI02	8-1-2	Input	External count clock/capture trigger input to 16-bit timer 02
TI03	7-1-1	Input	External count clock/capture trigger input to 16-bit timer 03
TI04	7-1-1	Input	External count clock/capture trigger input to 16-bit timer 04
TI05	7-1-1	Input	External count clock/capture trigger input to 16-bit timer 05
TI06	7-1-1	Input	External count clock/capture trigger input to 16-bit timer 06
TI07	7-1-1	Input	External count clock/capture trigger input to 16-bit timer 07

(2/2)

Function Name	Pin Type	I/O	Function
TO00	8-1-1	Output	Timer output of 16-bit timer 00
TO01	8-1-1	Output	Timer output of 16-bit timer 01
TO02	8-1-2	Output	Timer output of 16-bit timer 02
TO03	7-1-1	Output	Timer output of 16-bit timer 03
TO04	7-1-1	Output	Timer output of 16-bit timer 04
TO05	7-1-1	Output	Timer output of 16-bit timer 05
TO06	7-1-1	Output	Timer output of 16-bit timer 06
TO07	7-1-1	Output	Timer output of 16-bit timer 07
ANT	—	—	Antenna connection
DCLIN	—	—	External inductor/capacitor connection pin for DC-DC converter
DCLOUT	—	—	External inductor connection pin for DC-DC converter
RFCTLEN	R-11	Input	RF block control enable input (high: enable, low: disable) When using RF, connect RFCTLEN to P130 of MCU.
TXSELH_RF	R-12	Output	External PA/LNA control output
TXSELL_RF	R-12	Output	External PA/LNA control output
CLKOUT_RF	R-12	Output	16, 8, 4 MHz clock output
EXSLK_RF	R-12	Input	RF slow clock (32.768 kHz) external input When using RF, the RF slow clock can be supplied externally. In this case, connect it to PCLBUZ0 (sub-system clock).When using RF, the RF slow clock can be supplied externally. In this case, connect it to PCLBUZ0 (sub-system clock).
EXCLK	2-2-1	Input	External clock input for main system clock
EXCLKS	2-2-1	Input	External clock input for subsystem clock
X1	2-2-1	—	Resonator connection for main system clock
X2	2-2-1	—	
XT1	2-2-1	—	Resonator connection for subsystem clock
XT2	2-2-1	—	
XTAL1_RF	—	—	Resonator (32 MHz) connection for RF high- speed reference clock
XTAL2_RF	—	—	
V_{DD}	—	—	Positive power supply for MCU
V_{DD_RF}	—	—	Positive power supply for RF block
AV_{REFP}	4-3-1	Input	A/D converter reference potential (+ side) input
AV_{REFM}	4-3-1	Input	A/D converter reference potential (- side) input
AV_{DD_RF}	—	—	Positive analog power supply for RF block
V_{SS}	—	—	Ground potential for MCU
V_{SS_RF}	—	—	Ground potential for RF block
AV_{SS_RF}	—	—	Analog ground potential for RF block
TOOLRxD	8-1-2	Input	UART serial data reception for external device connection used during flash memory programming
TOOLTxD	7-1-2	Output	UART serial transmission for external device connection used during flash memory programming
TOOL0	7-1-1	I/O	Data I/O for flash memory programmer/debugger
IC0	—	—	Internal circuit connection (connect to V_{SS_RF} or AV_{SS_RF})
IC1	—	—	Internal circuit connection (connect to V_{SS_RF} or AV_{SS_RF})
GND1	—	—	Ground potential pad on back of package Make this pin the same potential as AV_{SS_RF}.

Caution After reset release, the relationships between P40/TOOL0 and the operating mode are as follows.

Table 3-2. Relationships Between P40/TOOL0 and Operation Mode After Reset Release

P40/TOOL0	Operating Mode
V_{DD}	Normal operation mode
0 V	Flash memory programming mode

For details, see 26.4 Serial Programming Method.

Remark Use bypass capacitors (about 0.1 μF) as noise and latch up countermeasures with relatively thick wires at the shortest distance to V_{DD} to V_{SS} line. For V_{DD_RF} to V_{SS_RF} and AV_{DD_RF} to AV_{SS_RF} lines, refer to the **RF Block Board Design Guideline**.

3.3 Connection of Unused Pins

Table 3-3 shows the connections of unused pins.

Table 3-3. Connection of Unused Pins (1/2)

Pin Name	I/O	Recommended Connection of Unused Pins
P00/TI00	I/O	Input: Independently connect to V_{DD} or V_{SS} via a resistor. Output: Leave open.
P01/TO00		
P02/ANI17/TxD1		
P03/ANI16/RxD1		
P10/SCK00/SCL00/(TI07)/(TO07)		Input: Independently connect to V_{DD} or V_{SS} via a resistor. Output: Leave open.
P11/SI00/RxD0/TOOLRxD/ SDA00/(TI06)/(TO06)		
P12/SO00/TxD0/TOOLTxD/(TI05)/(TO05)		
P13/SO20/(SDAA0)/(TI04)/(TO04)		
P14/SI20/SDA20/(SCLA0)/(TI03)/(TO03)		
P15/SCK20/SCL20/(TI02)/(TO02)		
P16/TI01/INTP5		Input: Independently connect to V_{DD} or V_{SS} via a resistor. Output: Leave open.
P20/ANI0/AV_{REFP}		Input: Independently connect to V_{DD} or V_{SS} via a resistor. Output: Leave open.
P21/ANI1/AV_{REFM}		
P22/ANI2		Input: Independently connect to V_{DD} or V_{SS} via a resistor. Output: Leave open.
P23/ANI3		
P30/INTP3/RTC1HZ		Input: Independently connect to V_{DD} or V_{SS} via a resistor. Output: Leave open.
P40/TOOL0		Input: Independently connect to V_{DD} or leave open. Output: Leave open.
P60/(SCLA0)		Input: Independently connect to V_{DD} or V_{SS} via a resistor. Output: Set the port's output latch to 0 and leave the pins open, or set the port's output latch to 1 and independently connect the pins to V_{DD} or V_{SS} via a resistor.
P61/(SDAA0)		
P120/ANI19	I/O	Input: Independently connect to V_{DD} or leave open. Output: Leave open.
P121/X1	Input	Independently connect to V_{DD} or V_{SS} via a resistor.
P122/X2/EXCLK		
P123/XT1		
P124/XT2/EXCLKS		
P130	Output	Leave open.
P137/INTP0	Input	Independently connect to V_{DD} or V_{SS} via a resistor.
P140/PCLBUZ0/INTP6	I/O	Input: Independently connect to V_{DD} or V_{SS} via a resistor. Output: Leave open.
P147/ANI18		
<R> GPIO0/TXSELH_RF	I/O	Connect to V_{SS_RF}. (When these pins are not in use, they always function as input ports in the reset state or after released from the reset state.)
<R> GPIO1/TXSELL_RF		
<R> GPIO2/CLKOUT_RF		

Table 3-3. Connection of Unused Pins (2/2)

Pin Name	I/O	Recommended Connection of Unused Pins
<R> GPIO3/EXSLK_RF	I/O	When the on-chip oscillator is used for RF slow clock: Leave open or connect to P140/PCLBUZ0/INTP6. When the on-chip oscillator is not used for RF slow clock: connect to V_{SS_RF}. (When this pin is not in use, it always functions as an input port in the reset state or after released from the reset state.)
$\overline{\text{RESET}}$	Input	Connect directly or via a resistor to V_{DD}.
REGC	—	Connect to V_{SS} via a capacitor (0.47 to 1 μF).
RFCTLEN	Input	Connect to V_{SS_RF}.
IC0	—	Connect to V_{SS_RF} or AV_{SS_RF}.
IC1	—	Connect to V_{SS_RF} or AV_{SS_RF}.

3.4 Block Diagrams of Pins

Figures 3-1 to 3-14 show the block diagrams.

Figure 3-1. Pin Block Diagram for Pin Type 1-1-1

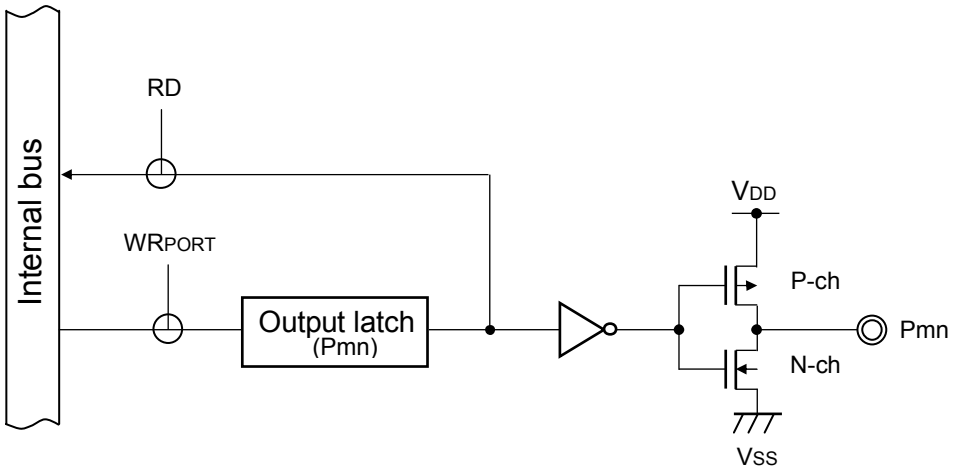

Figure 3-2. Pin Block Diagram for Pin Type 2-1-1

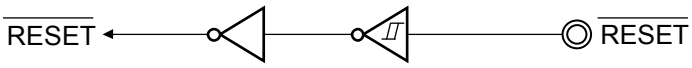

Figure 3-3. Pin Block Diagram for Pin Type 2-1-2

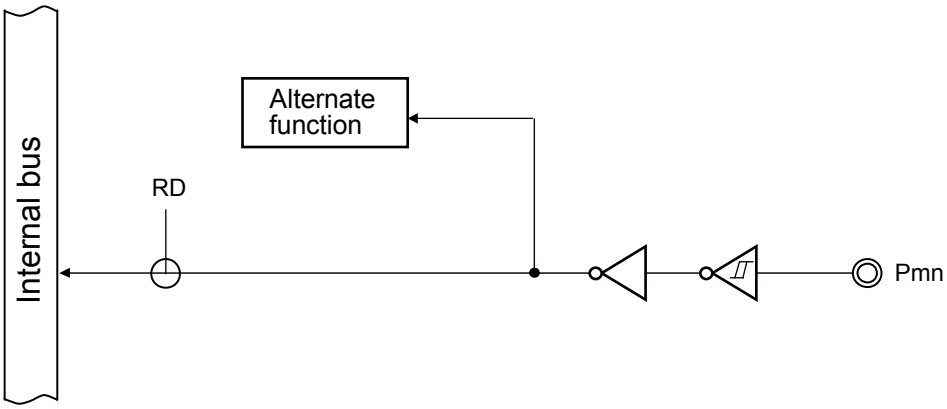

Remark For alternate functions, see **3.1 Port Function**.

Figure 3-4. Pin Block Diagram for Pin Type 2-2-1

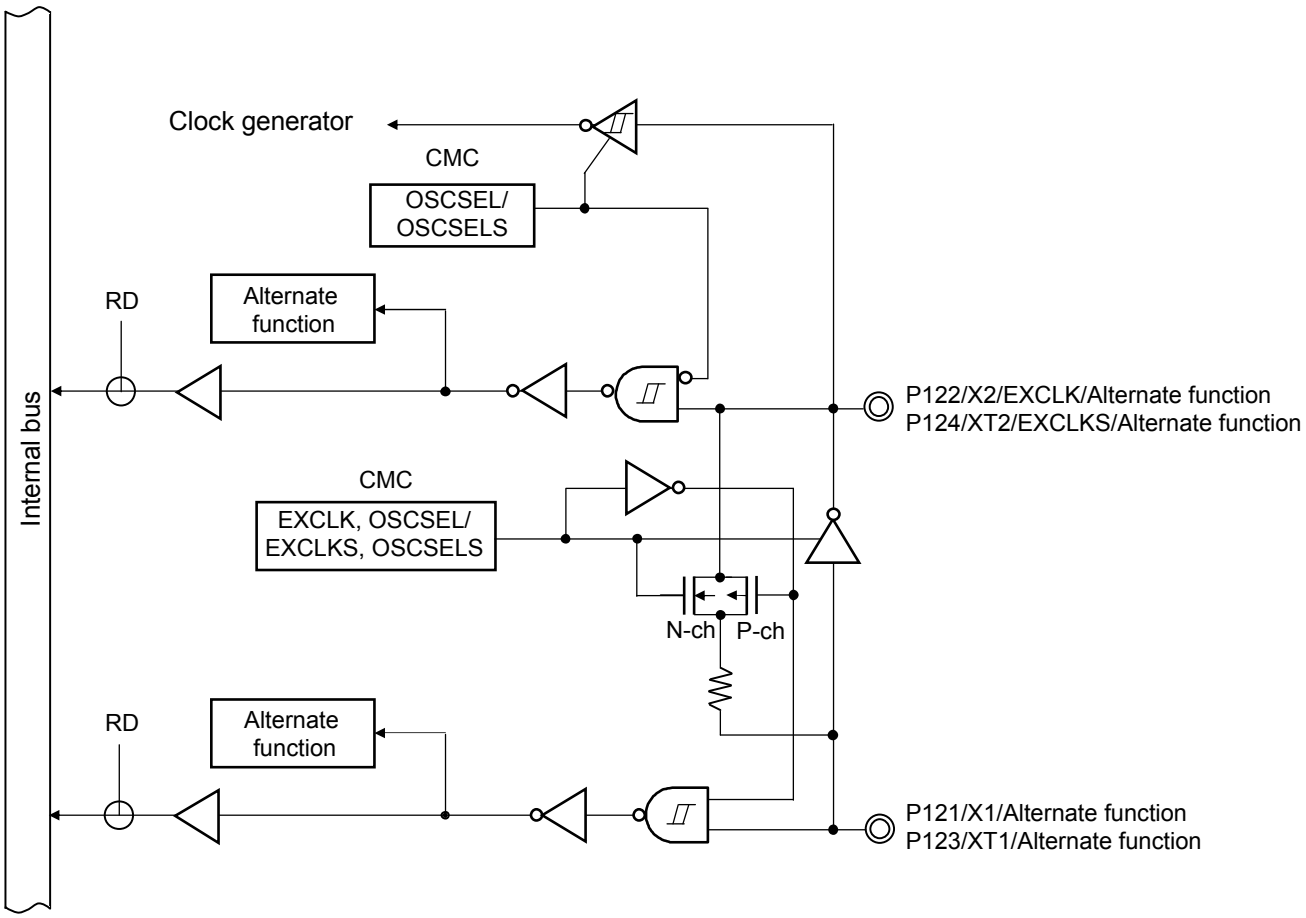

Remark For alternate functions, see **3.1 Port Function**.

Figure 3-5. Pin Block Diagram for Pin Type 4-3-1

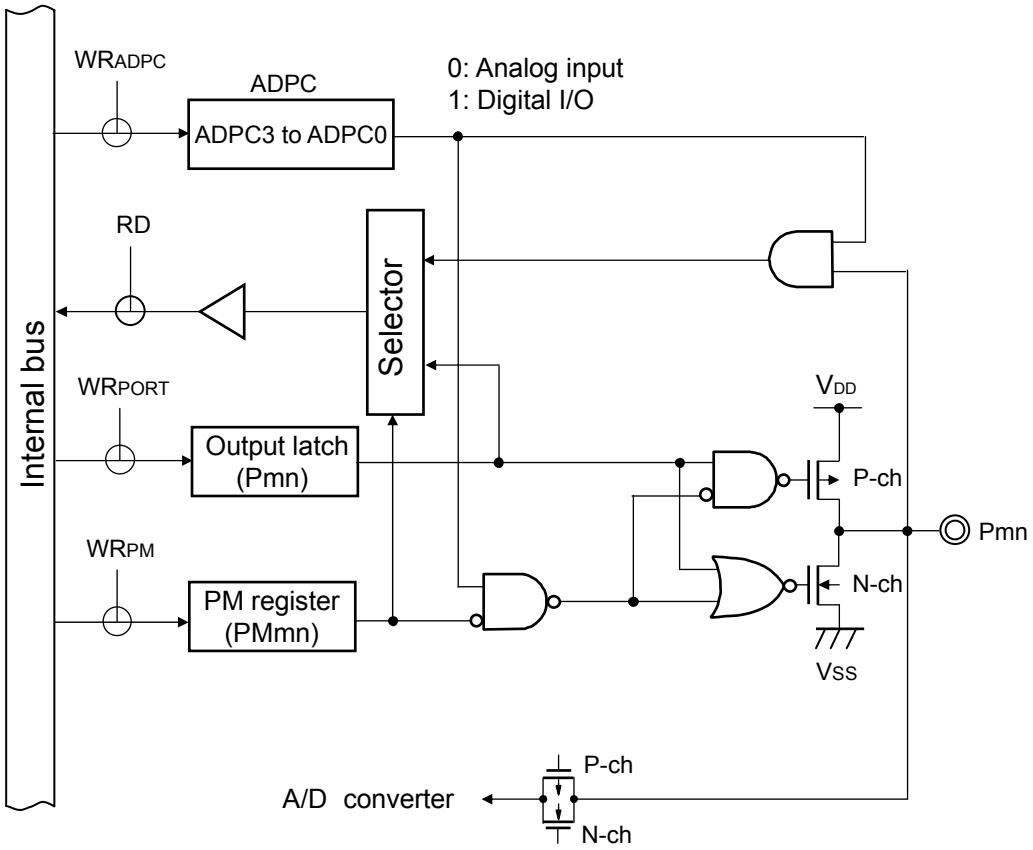

Figure 3-6. Pin Block Diagram for Pin Type 7-1-1

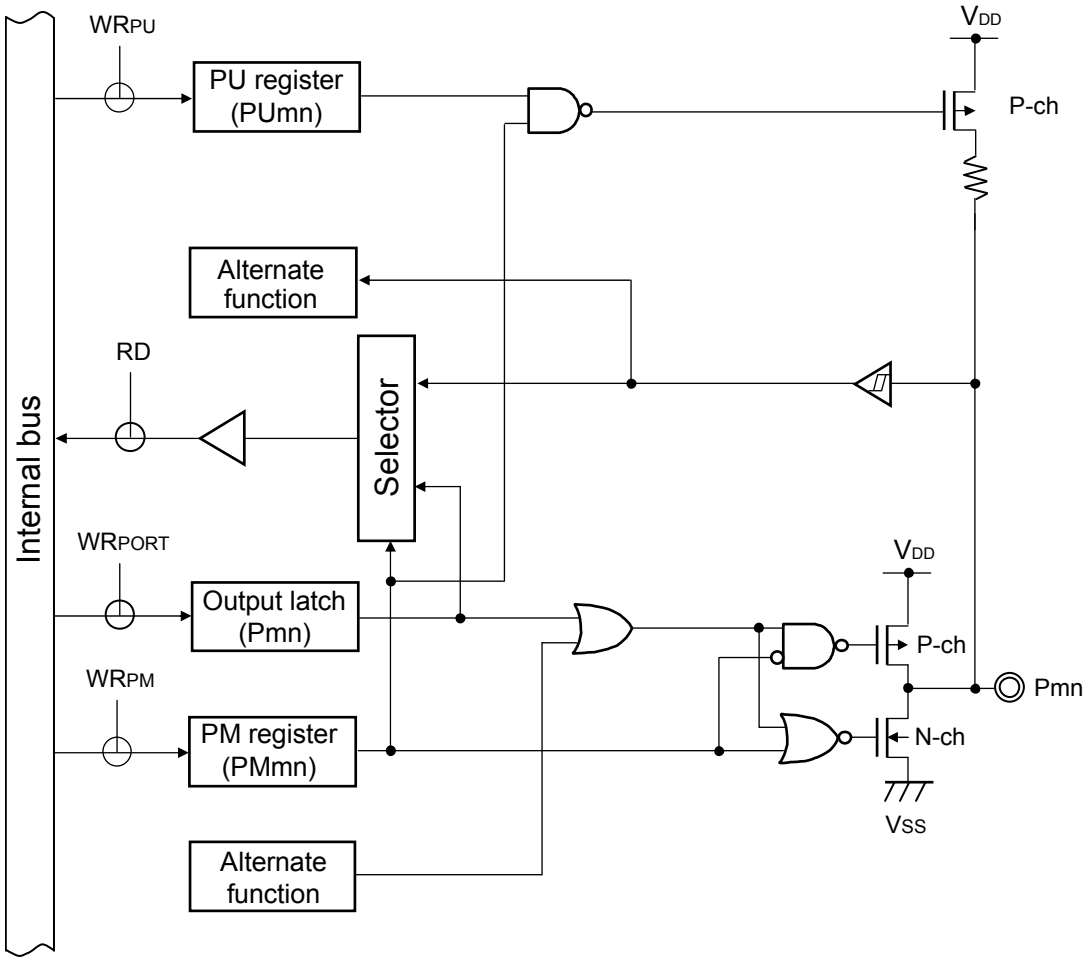

Remark For alternate functions, see **3.1 Port Function**.

Figure 3-7. Pin Block Diagram for Pin Type 7-1-2

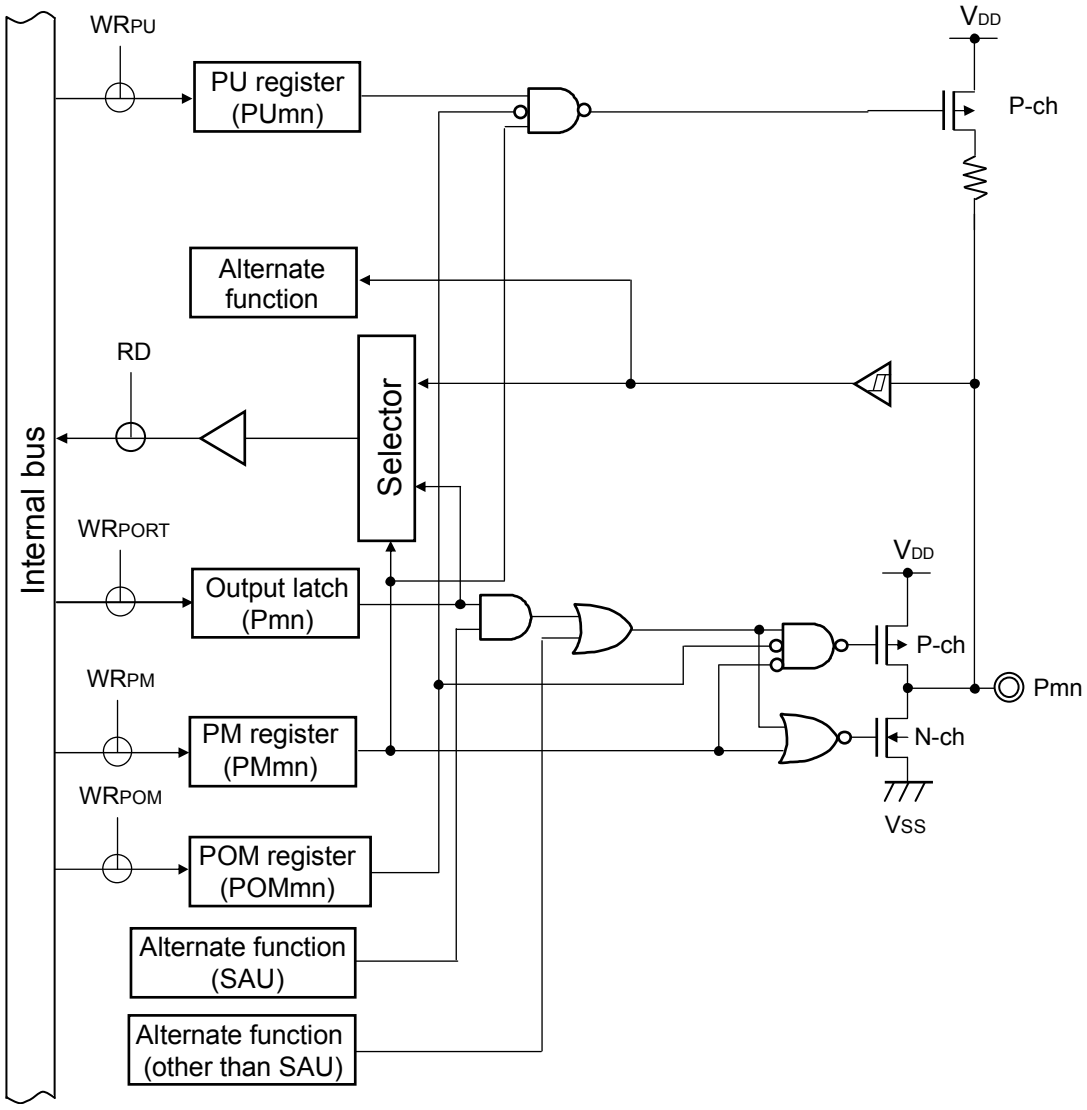

Remarks 1. For alternate functions, see **3.1 Port Function**.

2. SAU: Serial array unit

<R> **Figure 3-8. Pin Block Diagram for Pin Type 7-3-1**

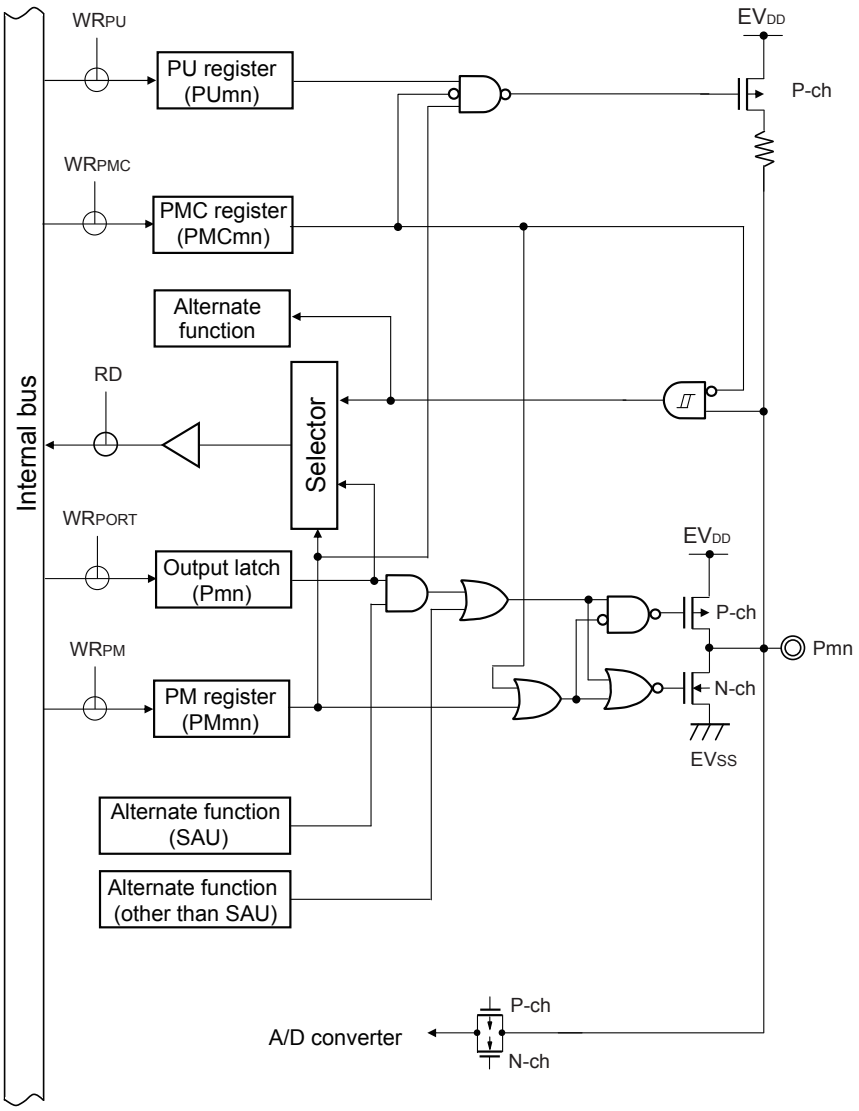

Remarks 1. For alternate functions, see **3.1 Port Function**.

2. SAU: Serial array unit

Figure 3-9. Pin Block Diagram for Pin Type 7-3-2

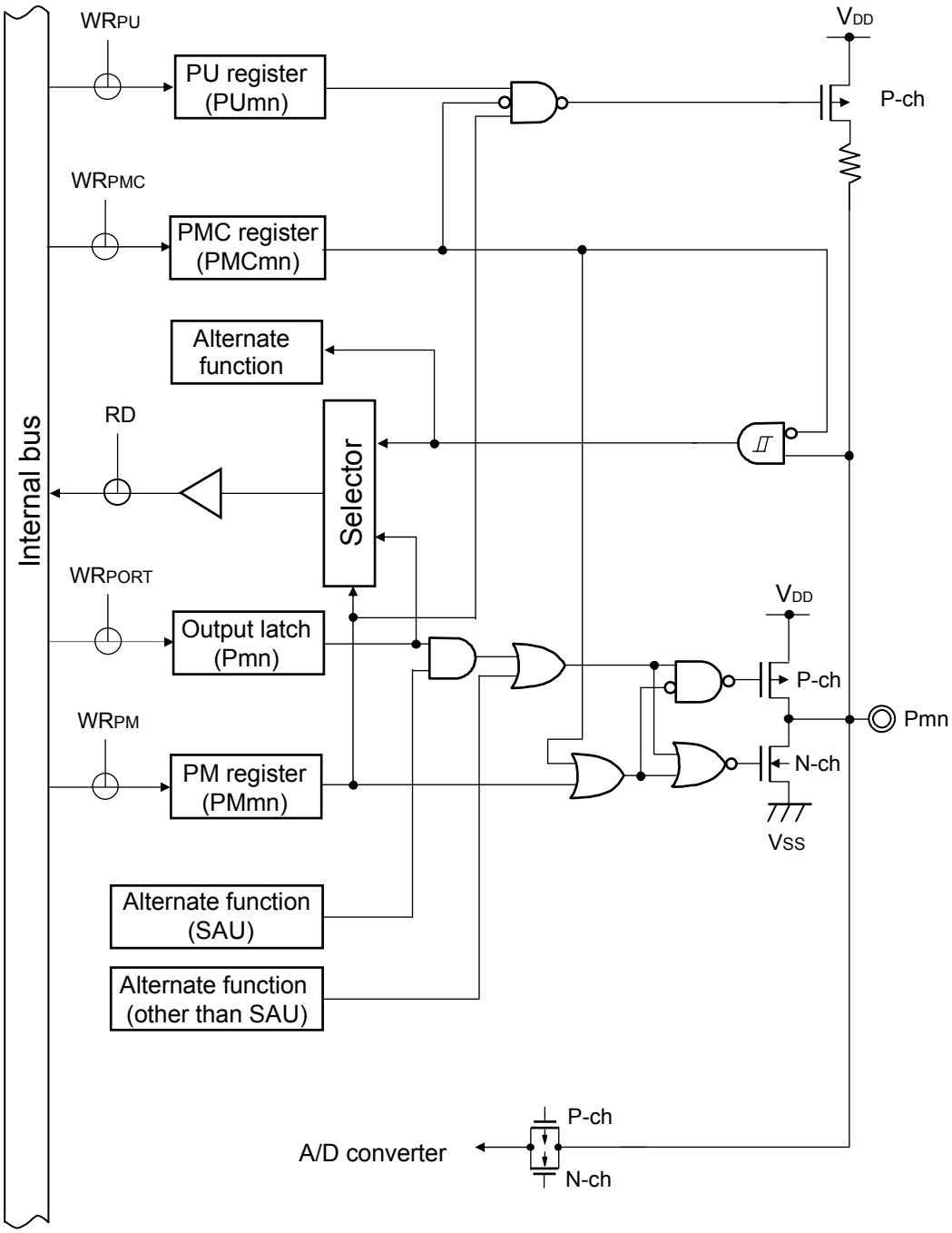

Remarks 1. For alternate functions, see **3.1 Port Function**.

2. SAU: Serial array unit

Figure 3-10. Pin Block Diagram for Pin Type 8-1-1

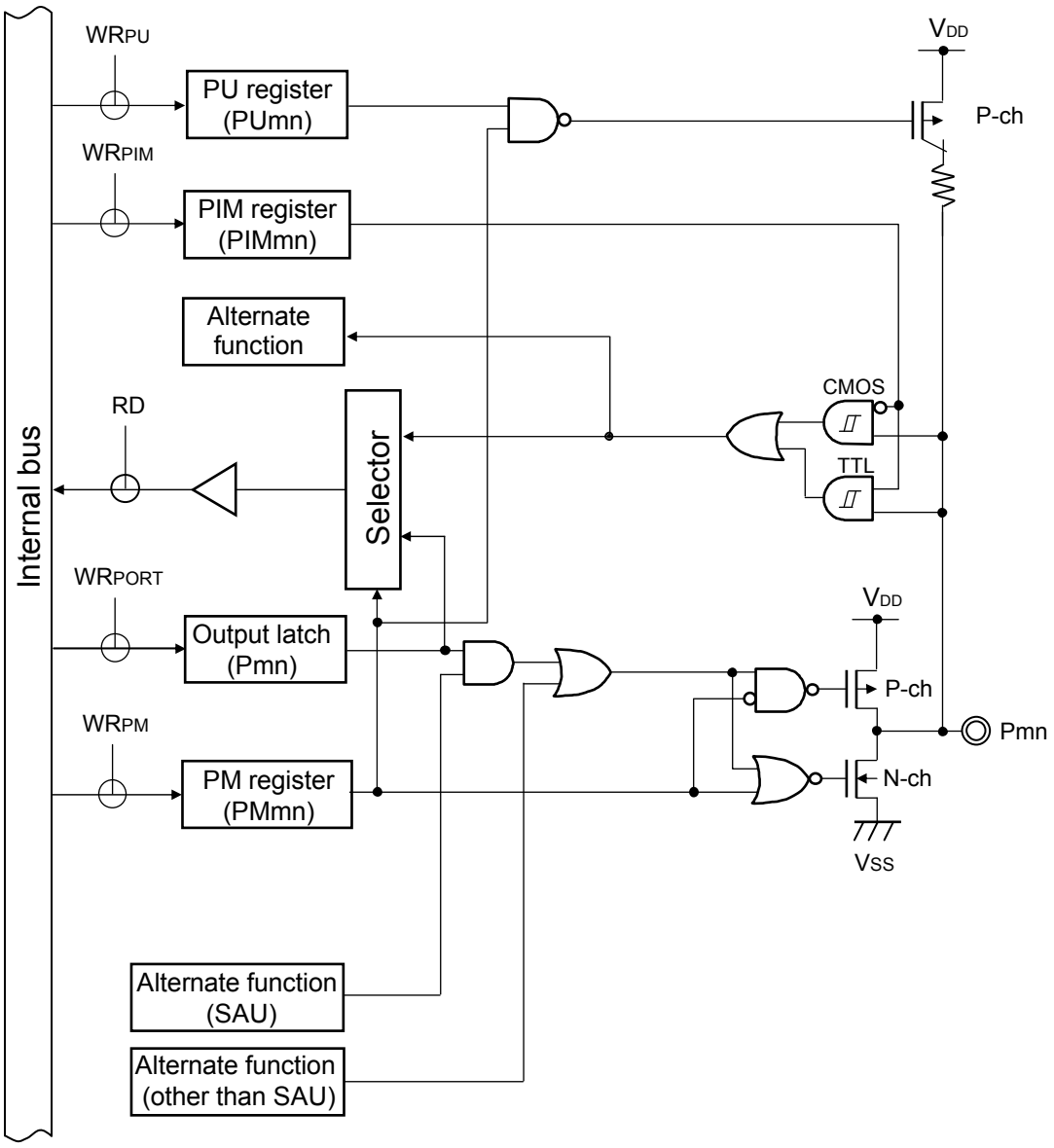

Remarks 1. For alternate functions, see **3.1 Port Function**.

2. SAU: Serial array unit

Figure 3-11. Pin Block Diagram for Pin Type 8-1-2

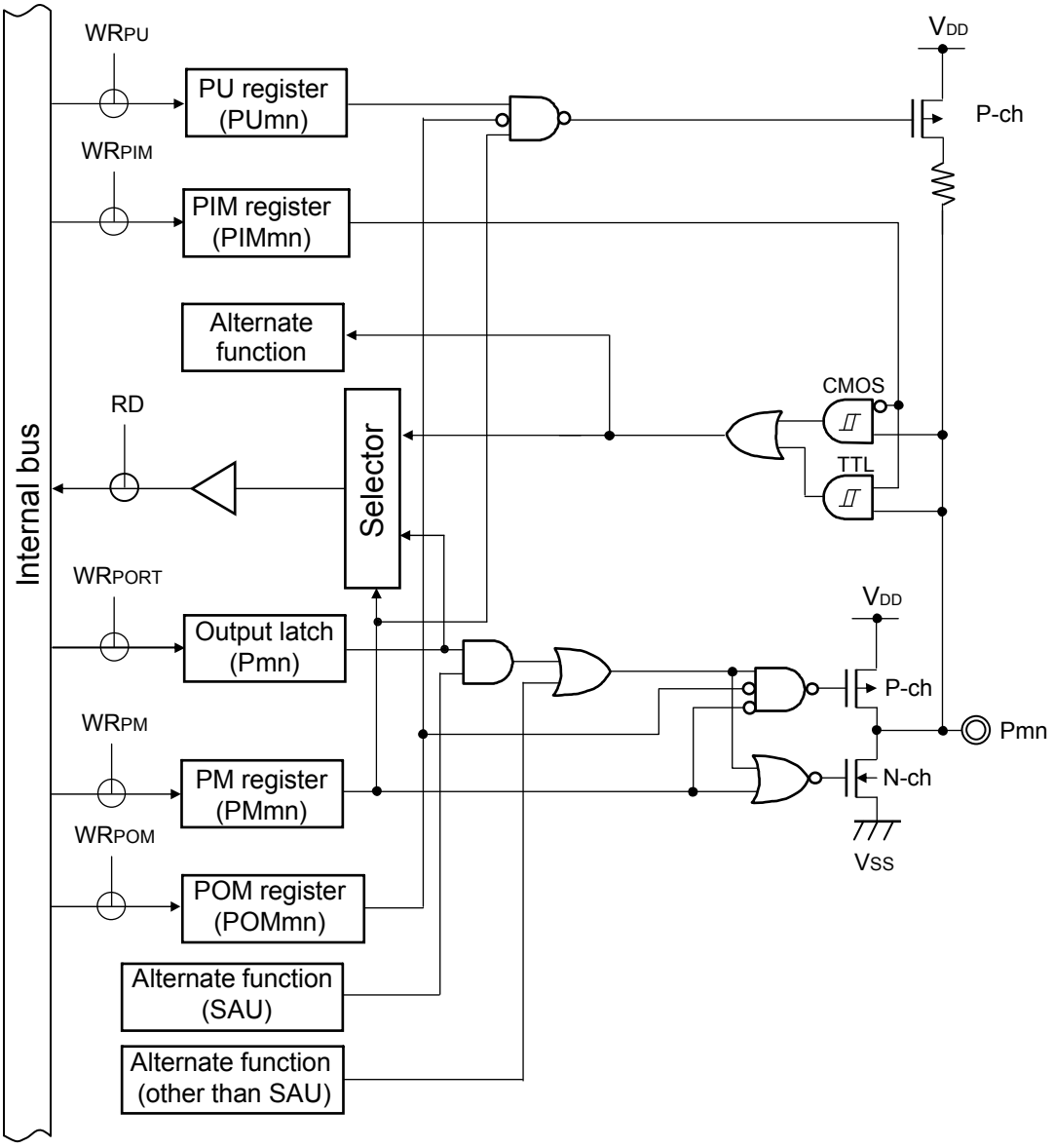

Remarks 1. For alternate functions, see **3.1 Port Function**.

2. SAU: Serial array unit

Figure 3-12. Pin Block Diagram for Pin Type 8-3-2

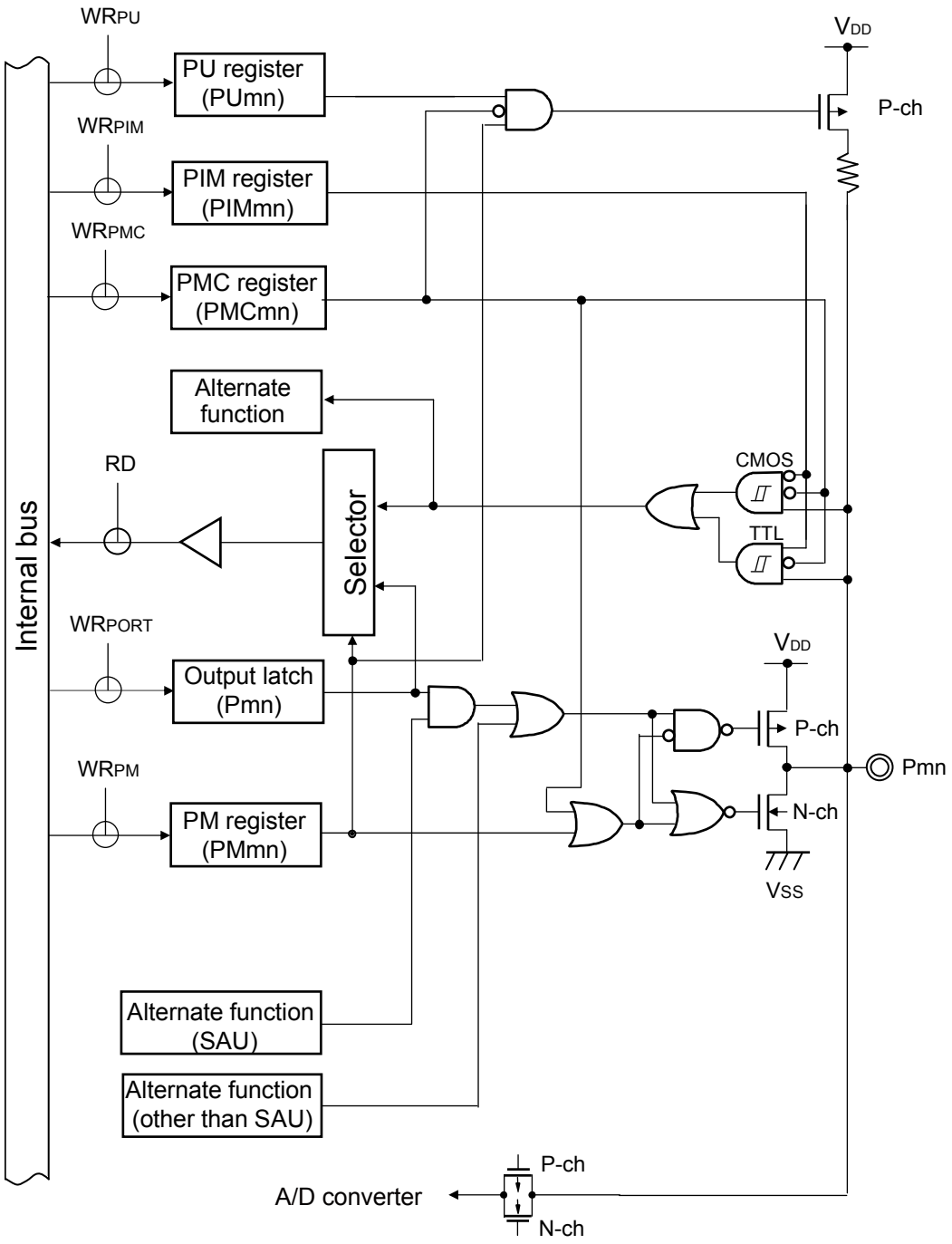

Remarks 1. For alternate functions, see **3.1 Port Function**.

2. SAU: Serial array unit

Figure 3-13. Pin Block Diagram for Pin Type 12-1-1

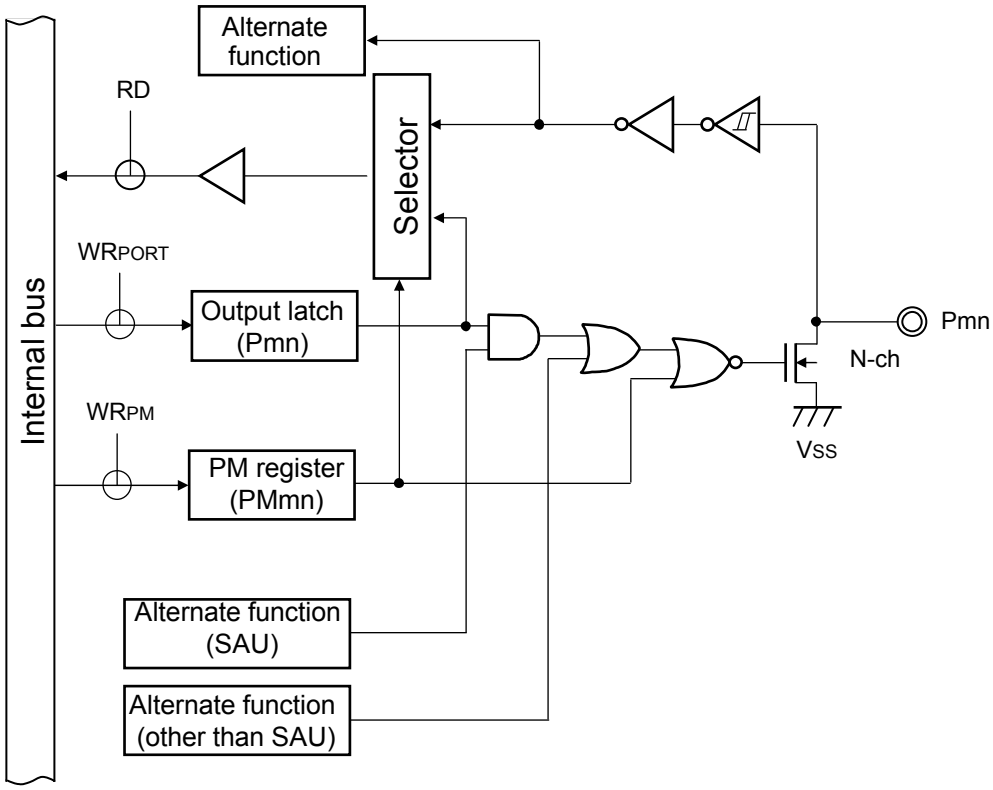

Remarks 1. For alternate functions, see **3.1 Port Function**.

2. SAU: Serial array unit

Figure 3-14. Pin Block Diagram for Pin Type R-11

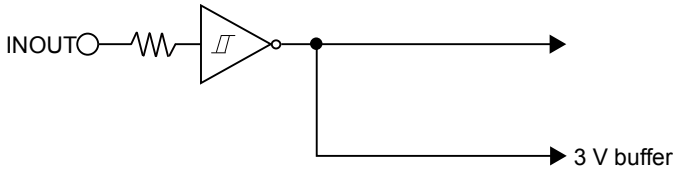

Figure 3-15. Pin Block Diagram for Pin Type R-12

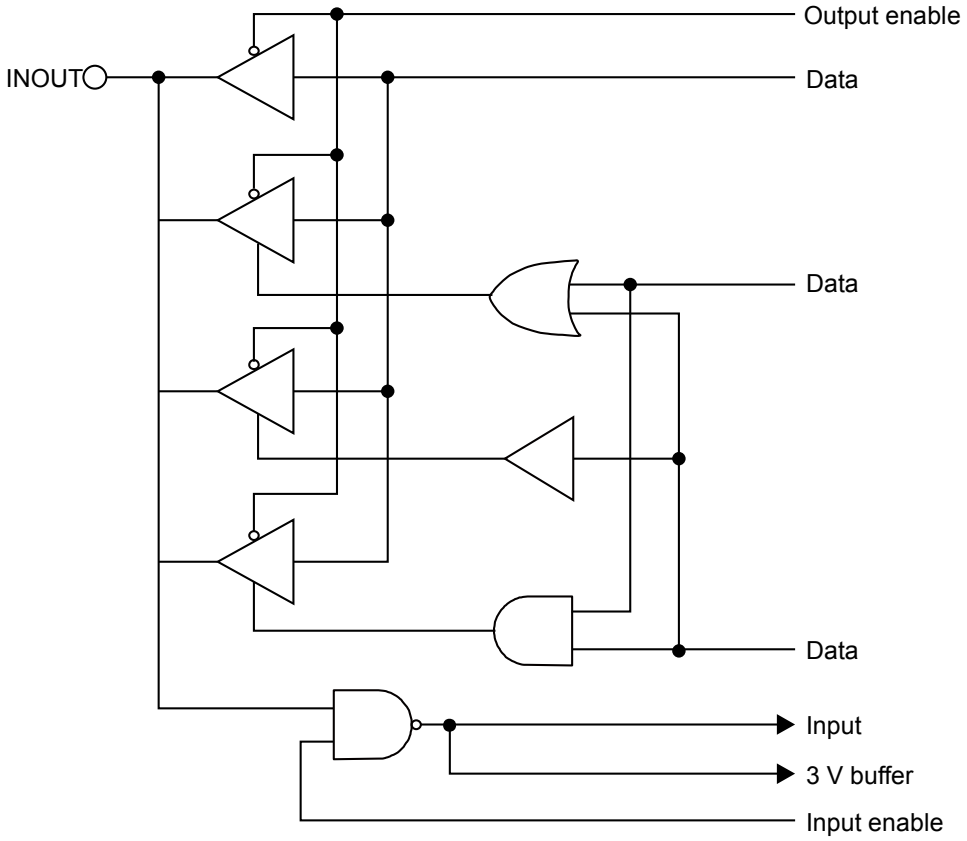

CHAPTER 4 CPU ARCHITECTURE

4.1 Memory Space

Products in the RL78/G1D can access a 1 MB address space. Figures 4-1 to 4-3 show the memory maps.

Figure 4-1. Memory Map (R5F11AGG)

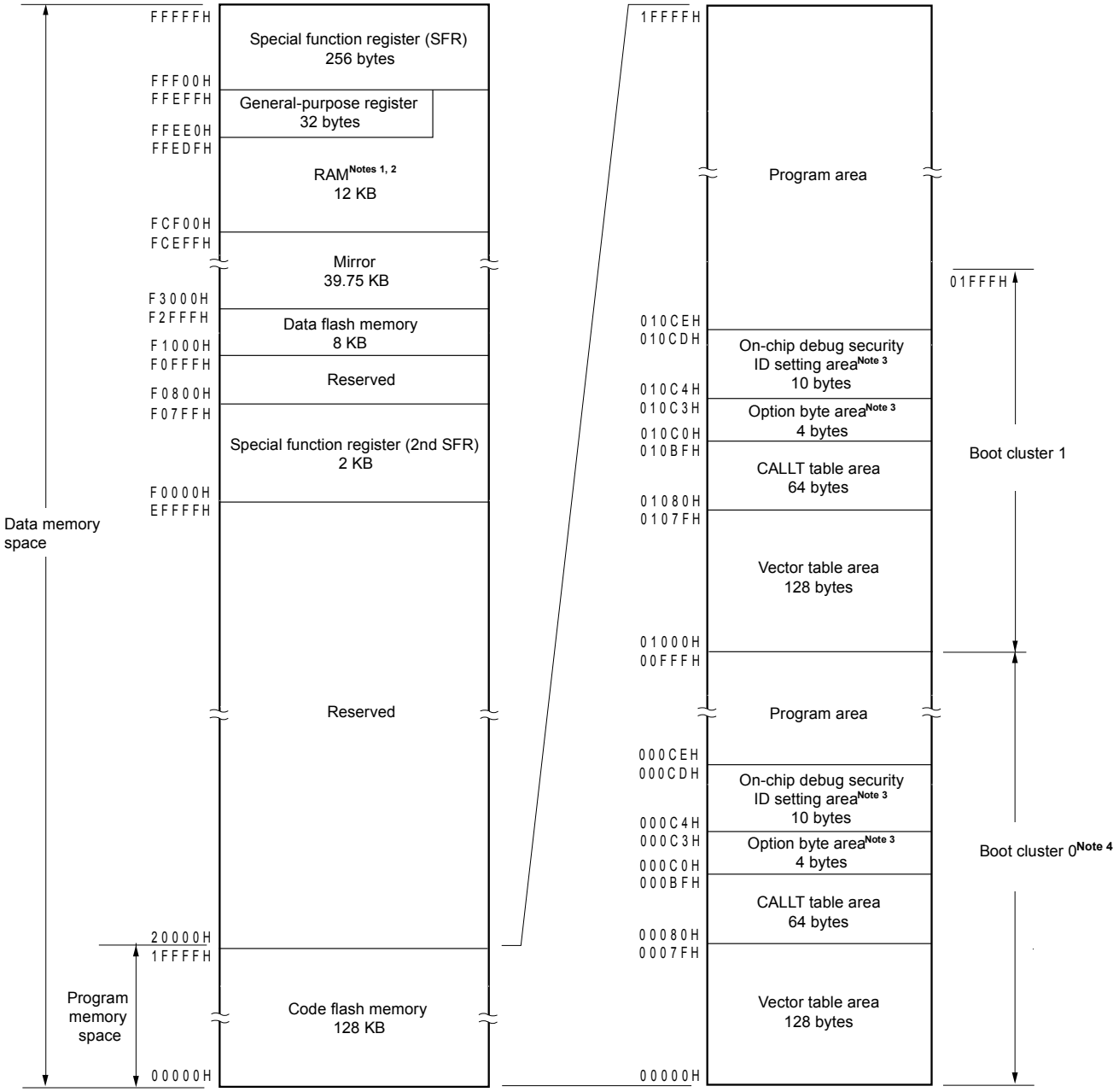

Notes 1. Do not allocate RAM addresses which are used as a stack area, a data buffer, a branch destination of vector interrupt processing, and a DMA transfer destination/transfer source to the area FFE20H to FFEDFH when performing self-programming and rewriting the data flash memory.

2. Instructions can be executed from the RAM area excluding the general-purpose register area.

3. When boot swap is not used: Set the option bytes to 000C0H to 000C3H, and the on-chip debug security IDs to 000C4H to 000CDH.

When boot swap is used: Set the option bytes to 000C0H to 000C3H and 010C0H to 010C3H, and the on-chip debug security IDs to 000C4H to 000CDH and 010C4H to 010CDH.

4. Writing boot cluster 0 can be prohibited depending on the setting of security (see **25.7 Security Setting**).

Caution While RAM parity error resets are enabled (RPERDIS = 0), be sure to initialize RAM areas where data access is to proceed and the RAM area + 10 bytes when instructions are fetched from RAM areas, respectively. Reset signal generation sets RAM parity error resets to enabled (RPERDIS = 0). For details, see 23.3.3 RAM parity error detection function.

Figure 4-2. Memory Map (R5F11AGH)

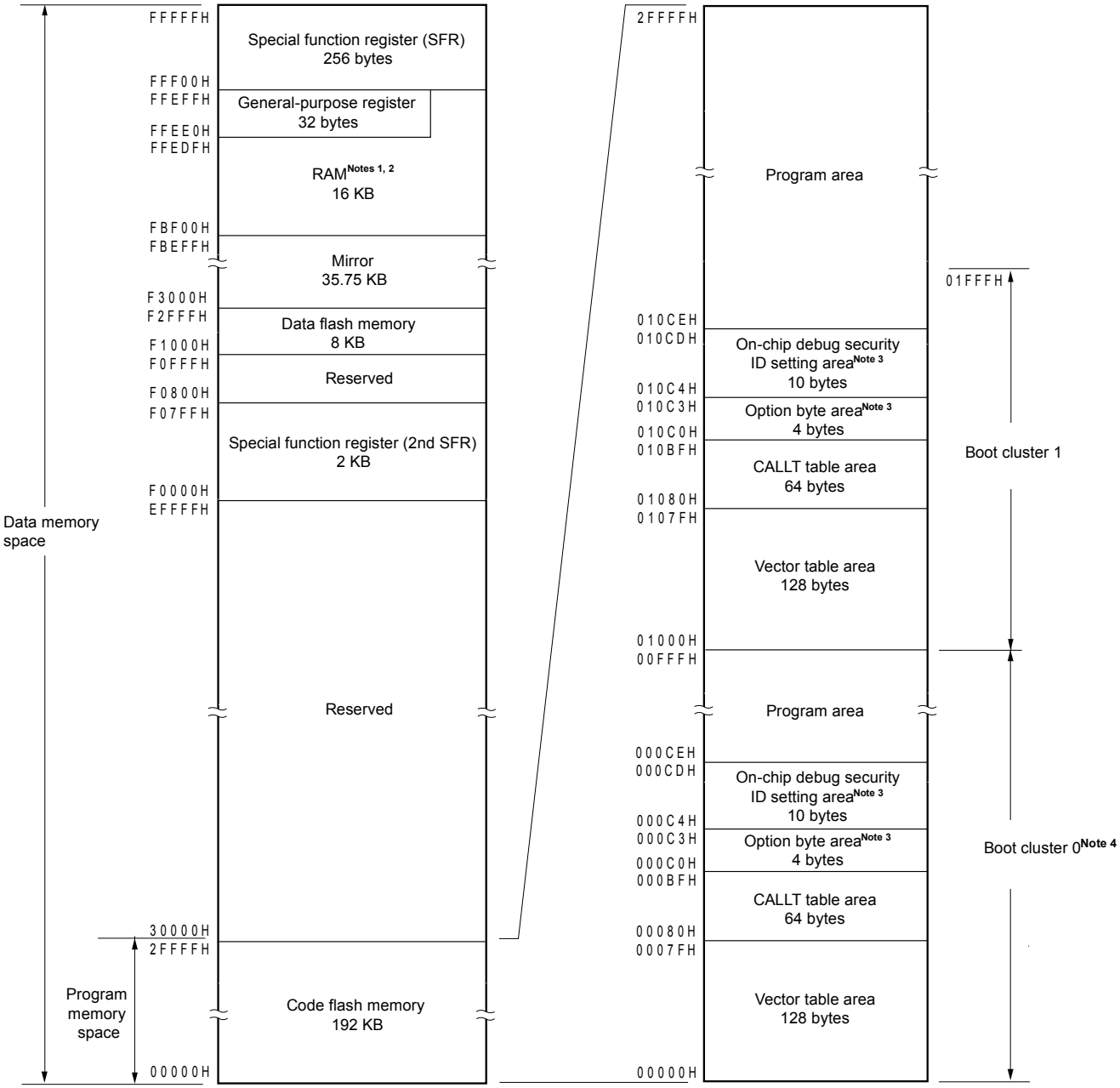

Notes 1. Do not allocate RAM addresses which are used as a stack area, a data buffer, a branch destination of vector interrupt processing, and a DMA transfer destination/transfer source to the area FFE20H to FFEDFH when performing self-programming and rewriting the data flash memory.

2. Instructions can be executed from the RAM area excluding the general-purpose register area.

3. When boot swap is not used: Set the option bytes to 000C0H to 000C3H, and the on-chip debug security IDs to 000C4H to 000CDH.

When boot swap is used: Set the option bytes to 000C0H to 000C3H and 010C0H to 010C3H, and the on-chip debug security IDs to 000C4H to 000CDH and 010C4H to 010CDH.

4. Writing boot cluster 0 can be prohibited depending on the setting of security (see **25.7 Security Setting**).

Caution While RAM parity error resets are enabled (RPERDIS = 0), be sure to initialize RAM areas where data access is to proceed and the RAM area + 10 bytes when instructions are fetched from RAM areas, respectively. Reset signal generation sets RAM parity error resets to enabled (RPERDIS = 0). For details, see 23.3.3 RAM parity error detection function.

Figure 4-3. Memory Map (R5F11AGJ)

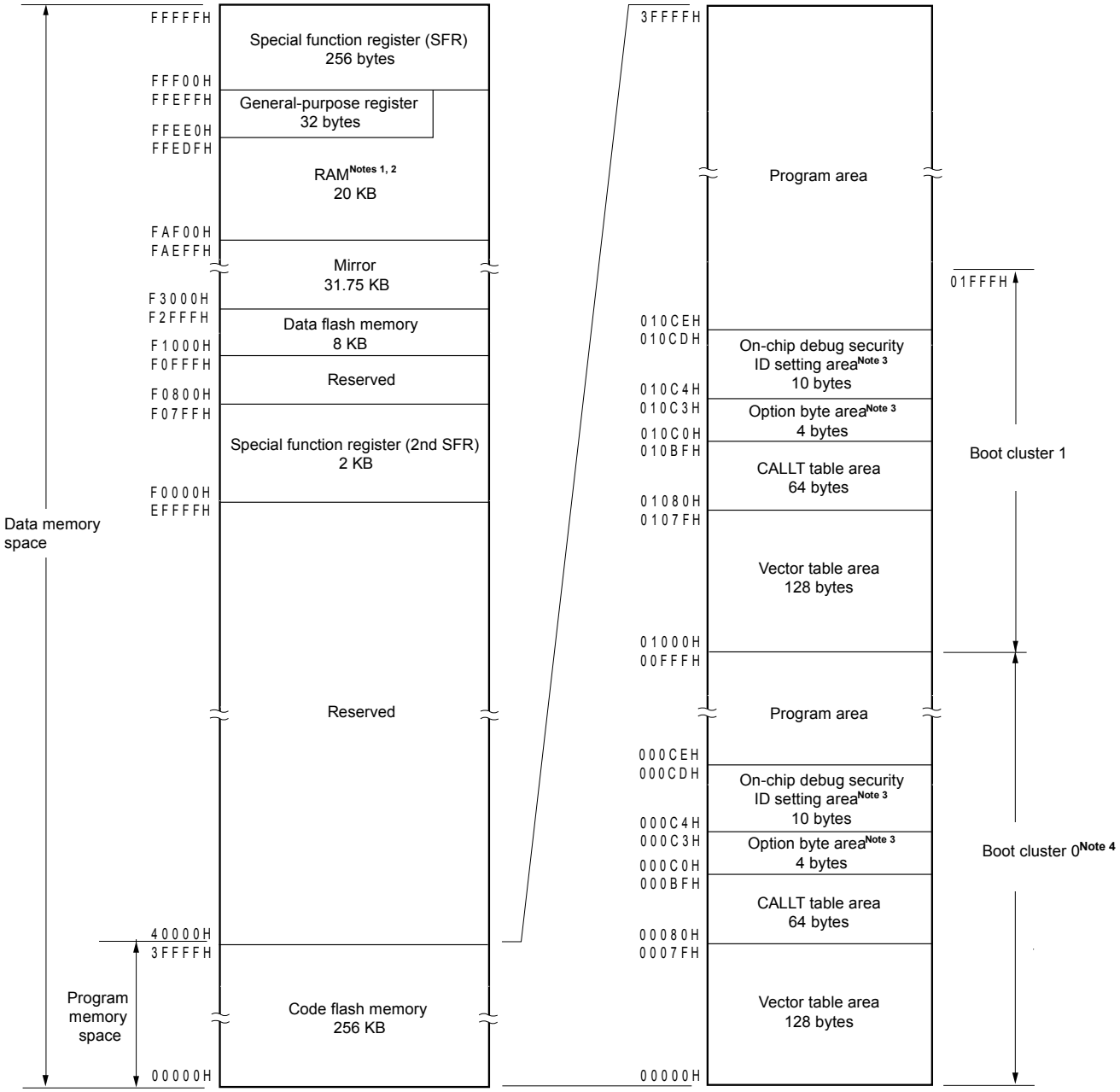

Notes 1. Do not allocate RAM addresses which are used as a stack area, a data buffer, a branch destination of vector interrupt processing, and a DMA transfer destination/transfer source to the area FFE20H to FFEDFH when performing self-programming and rewriting the data flash memory. Also, use of the area FAF00H to FB309H is prohibited, because this area is used for each library.

2. Instructions can be executed from the RAM area excluding the general-purpose register area.

3. When boot swap is not used: Set the option bytes to 000C0H to 000C3H, and the on-chip debug security IDs to 000C4H to 000CDH.

When boot swap is used: Set the option bytes to 000C0H to 000C3H and 010C0H to 010C3H, and the on-chip debug security IDs to 000C4H to 000CDH and 010C4H to 010CDH.

4. Writing boot cluster 0 can be prohibited depending on the setting of security (see **25.7 Security Setting**).

Caution While RAM parity error resets are enabled (RPERDIS = 0), be sure to initialize RAM areas where data access is to proceed and the RAM area + 10 bytes when instructions are fetched from RAM areas, respectively. Reset signal generation sets RAM parity error resets to enabled (RPERDIS = 0). For details, see 23.3.3 RAM parity error detection function.

Correspondence between the address values and block numbers in the flash memory are shown below.

Table 4-1. Correspondence Between Address Values and Block Numbers in Flash Memory (1/2)

Address Value	Block Number	Address Value	Block Number	Address Value	Block Number	Address Value	Block Number
00000H to 003FFH	00H	08000H to 083FFH	20H	10000H to 103FFH	40H	18000H to 183FFH	60H
00400H to 007FFH	01H	08400H to 087FFH	21H	10400H to 107FFH	41H	18400H to 187FFH	61H
00800H to 00BFFH	02H	08800H to 08BFFH	22H	10800H to 10BFFH	42H	18800H to 18BFFH	62H
00C00H to 00FFFH	03H	08C00H to 08FFFH	23H	10C00H to 10FFFH	43H	18C00H to 18FFFH	63H
01000H to 013FFH	04H	09000H to 093FFH	24H	11000H to 113FFH	44H	19000H to 193FFH	64H
01400H to 017FFH	05H	09400H to 097FFH	25H	11400H to 117FFH	45H	19400H to 197FFH	65H
01800H to 01BFFH	06H	09800H to 09BFFH	26H	11800H to 11BFFH	46H	19800H to 19BFFH	66H
01C00H to 01FFFH	07H	09C00H to 09FFFH	27H	11C00H to 11FFFH	47H	19C00H to 19FFFH	67H
02000H to 023FFH	08H	0A000H to 0A3FFH	28H	12000H to 123FFH	48H	1A000H to 1A3FFH	68H
02400H to 027FFH	09H	0A400H to 0A7FFH	29H	12400H to 127FFH	49H	1A400H to 1A7FFH	69H
02800H to 02BFFH	0AH	0A800H to 0ABFFH	2AH	12800H to 12BFFH	4AH	1A800H to 1ABFFH	6AH
02C00H to 02FFFH	0BH	0AC00H to 0AFFFH	2BH	12C00H to 12FFFH	4BH	1AC00H to 1AFFFH	6BH
03000H to 033FFH	0CH	0B000H to 0B3FFH	2CH	13000H to 133FFH	4CH	1B000H to 1B3FFH	6CH
03400H to 037FFH	0DH	0B400H to 0B7FFH	2DH	13400H to 137FFH	4DH	1B400H to 1B7FFH	6DH
03800H to 03BFFH	0EH	0B800H to 0BBFFH	2EH	13800H to 13BFFH	4EH	1B800H to 1BBFFH	6EH
03C00H to 03FFFH	0FH	0BC00H to 0BFFFH	2FH	13C00H to 13FFFH	4FH	1BC00H to 1BFFFH	6FH
04000H to 043FFH	10H	0C000H to 0C3FFH	30H	14000H to 143FFH	50H	1C000H to 1C3FFH	70H
04400H to 047FFH	11H	0C400H to 0C7FFH	31H	14400H to 147FFH	51H	1C400H to 1C7FFH	71H
04800H to 04BFFH	12H	0C800H to 0CBFFH	32H	14800H to 14BFFH	52H	1C800H to 1CBFFH	72H
04C00H to 04FFFH	13H	0CC00H to 0CFFFH	33H	14C00H to 14FFFH	53H	1CC00H to 1CFFFH	73H
05000H to 053FFH	14H	0D000H to 0D3FFH	34H	15000H to 153FFH	54H	1D000H to 1D3FFH	74H
05400H to 057FFH	15H	0D400H to 0D7FFH	35H	15400H to 157FFH	55H	1D400H to 1D7FFH	75H
05800H to 05BFFH	16H	0D800H to 0DBFFH	36H	15800H to 15BFFH	56H	1D800H to 1DBFFH	76H
05C00H to 05FFFH	17H	0DC00H to 0DFFFH	37H	15C00H to 15FFFH	57H	1DC00H to 1DFFFH	77H
06000H to 063FFH	18H	0E000H to 0E3FFH	38H	16000H to 163FFH	58H	1E000H to 1E3FFH	78H
06400H to 067FFH	19H	0E400H to 0E7FFH	39H	16400H to 167FFH	59H	1E400H to 1E7FFH	79H
06800H to 06BFFH	1AH	0E800H to 0EBFFH	3AH	16800H to 16BFFH	5AH	1E800H to 1EBFFH	7AH
06C00H to 06FFFH	1BH	0EC00H to 0EFFFH	3BH	16C00H to 16FFFH	5BH	1EC00H to 1EFFFH	7BH
07000H to 073FFH	1CH	0F000H to 0F3FFH	3CH	17000H to 173FFH	5CH	1F000H to 1F3FFH	7CH
07400H to 077FFH	1DH	0F400H to 0F7FFH	3DH	17400H to 177FFH	5DH	1F400H to 1F7FFH	7DH
07800H to 07BFFH	1EH	0F800H to 0FBFFH	3EH	17800H to 17BFFH	5EH	1F800H to 1FBFFH	7EH
07C00H to 07FFFH	1FH	0FC00H to 0FFFFH	3FH	17C00H to 17FFFH	5FH	1FC00H to 1FFFFH	7FH

Remark R5F11AGG : Block numbers 00H to 7FH

Table 4-1. Correspondence Between Address Values and Block Numbers in Flash Memory (2/2)

Address Value	Block Number	Address Value	Block Number	Address Value	Block Number	Address Value	Block Number
20000H to 203FFH	80H	28000H to 283FFH	A0H	30000H to 303FFH	C0H	38000H to 383FFH	E0H
20400H to 207FFH	81H	28400H to 287FFH	A1H	30400H to 307FFH	C1H	38400H to 387FFH	E1H
20800H to 20BFFH	82H	28800H to 28BFFH	A2H	30800H to 30BFFH	C2H	38800H to 38BFFH	E2H
20C00H to 20FFFH	83H	28C00H to 28FFFH	A3H	30C00H to 30FFFH	C3H	38C00H to 38FFFH	E3H
21000H to 213FFH	84H	29000H to 293FFH	A4H	31000H to 313FFH	C4H	39000H to 393FFH	E4H
21400H to 217FFH	85H	29400H to 297FFH	A5H	31400H to 317FFH	C5H	39400H to 397FFH	E5H
21800H to 21BFFH	86H	29800H to 29BFFH	A6H	31800H to 31BFFH	C6H	39800H to 39BFFH	E6H
21C00H to 21FFFH	87H	29C00H to 29FFFH	A7H	31C00H to 31FFFH	C7H	39C00H to 39FFFH	E7H
22000H to 223FFH	88H	2A000H to 2A3FFH	A8H	32000H to 323FFH	C8H	3A000H to 3A3FFH	E8H
22400H to 227FFH	89H	2A400H to 2A7FFH	A9H	32400H to 327FFH	C9H	3A400H to 3A7FFH	E9H
22800H to 22BFFH	8AH	2A800H to 2ABFFH	AAH	32800H to 32BFFH	CAH	3A800H to 3ABFFH	EAH
22C00H to 22FFFH	8BH	2AC00H to 2AFFFH	ABH	32C00H to 32FFFH	CBH	3AC00H to 3AFFFH	EBH
23000H to 233FFH	8CH	2B000H to 2B3FFH	ACH	33000H to 333FFH	CCH	3B000H to 3B3FFH	ECH
23400H to 237FFH	8DH	2B400H to 2B7FFH	ADH	33400H to 337FFH	CDH	3B400H to 3B7FFH	EDH
23800H to 23BFFH	8EH	2B800H to 2BBFFH	AEH	33800H to 33BFFH	CEH	3B800H to 3BBFFH	EEH
23C00H to 23FFFH	8FH	2BC00H to 2BFFFH	AFH	33C00H to 33FFFH	CFH	3BC00H to 3BFFFH	EFH
24000H to 243FFH	90H	2C000H to 2C3FFH	B0H	34000H to 343FFH	D0H	3C000H to 3C3FFH	F0H
24400H to 247FFH	91H	2C400H to 2C7FFH	B1H	34400H to 347FFH	D1H	3C400H to 3C7FFH	F1H
24800H to 24BFFH	92H	2C800H to 2CBFFH	B2H	34800H to 34BFFH	D2H	3C800H to 3CBFFH	F2H
24C00H to 24FFFH	93H	2CC00H to 2CFFFH	B3H	34C00H to 34FFFH	D3H	3CC00H to 3CFFFH	F3H
25000H to 253FFH	94H	2D000H to 2D3FFH	B4H	35000H to 353FFH	D4H	3D000H to 3D3FFH	F4H
25400H to 257FFH	95H	2D400H to 2D7FFH	B5H	35400H to 357FFH	D5H	3D400H to 3D7FFH	F5H
25800H to 25BFFH	96H	2D800H to 2DBFFH	B6H	35800H to 35BFFH	D6H	3D800H to 3DBFFH	F6H
25C00H to 25FFFH	97H	2DC00H to 2DFFFH	B7H	35C00H to 35FFFH	D7H	3DC00H to 3DFFFH	F7H
26000H to 263FFH	98H	2E000H to 2E3FFH	B8H	36000H to 363FFH	D8H	3E000H to 3E3FFH	F8H
26400H to 267FFH	99H	2E400H to 2E7FFH	B9H	36400H to 367FFH	D9H	3E400H to 3E7FFH	F9H
26800H to 26BFFH	9AH	2E800H to 2EBFFH	BAH	36800H to 36BFFH	DAH	3E800H to 3EBFFH	FAH
26C00H to 26FFFH	9BH	2EC00H to 2EFFFH	BBH	36C00H to 36FFFH	DBH	3EC00H to 3EFFFH	FBH
27000H to 273FFH	9CH	2F000H to 2F3FFH	BCH	37000H to 373FFH	DCH	3F000H to 3F3FFH	FCH
27400H to 277FFH	9DH	2F400H to 2F7FFH	BDH	37400H to 377FFH	DDH	3F400H to 3F7FFH	FDH
27800H to 27BFFH	9EH	2F800H to 2FBFFH	BEH	37800H to 37BFFH	DEH	3F800H to 3FBFFH	FEH
27C00H to 27FFFH	9FH	2FC00H to 2FFFFH	BFH	37C00H to 37FFFH	DFH	3FC00H to 3FFFFH	FFH

Remark R5F11AGH : Block numbers 00H to BFH
R5F11AGJ : Block numbers 00H to FFH

4.1.1 Internal program memory space

The internal program memory space stores the program and table data.

The RL78/G1D products incorporate internal ROM (flash memory), as shown below.

Table 4-2. Internal ROM Capacity

Part Number	Internal ROM	
	Structure	Capacity
R5F11AGG	Flash memory	131072 × 8 bits (00000H to 1FFFFH)
R5F11AGH		196608 × 8 bits (00000H to 2FFFFH)
R5F11AGJ		262144 × 8 bits (00000H to 3FFFFH)

The internal program memory space is divided into the following areas.

(1) Vector table area

The 128-byte area 00000H to 0007FH is reserved as a vector table area. The program start addresses for branch upon reset or generation of each interrupt request are stored in the vector table area. Furthermore, the interrupt jump address is a 64 K address of 00000H to 0FFFFH, because the vector code is assumed to be 2 bytes.

Of the 16-bit address, the lower 8 bits are stored at even addresses and the higher 8 bits are stored at odd addresses.

To use the boot swap function, set a vector table also at 01000H to 0107FH.

Table 4-3. Vector Table

Vector Table Address	Interrupt Source
0000H	RESET, POR, LVD, WDT, TRAP, IAW, RPE
0004H	INTWDTI
0006H	INTLVI
0008H	INTP0
000EH	INTP3
0012H	INTP5
0014H	INTCSI20/INTIIC20
0016H	INTCSI21
0018H	INTTM11H
001AH	INTDMA0
001CH	INTDMA1
001EH	INTST0/INTCSI00/INTIIC00
0020H	INTSR0
0022H	INTSRE0
	INTTM01H
0024H	INTST1
0026H	INTSR1
0028H	INTSRE1
	INTTM03H
002AH	INTIICA0
002CH	INTTM00
002EH	INTTM01
0030H	INTTM02
0032H	INTTM03
0034H	INTAD
0036H	INTRTC
0038H	INTIT
0042H	INTTM04
0044H	INTTM05
0046H	INTTM06
0048H	INTTM07
004AH	INTP6
0054H	INTRF
005EH	INTMD
0062H	INTFL
0064H	INTDMA2
0066H	INTDMA3
007EH	BRK

(2) CALLT instruction table area

The 64-byte area 00080H to 000BFH can store the subroutine entry address of a 2-byte call instruction (CALLT). Set the subroutine entry address to a value in a range of 00000H to 0FFFFH (because an address code is of 2 bytes).
To use the boot swap function, set a CALLT instruction table also at 01080H to 010BFH.

(3) Option byte area

A 4-byte area of 000C0H to 000C3H can be used as an option byte area. Set the option byte at 010C0H to 010C3H when the boot swap is used. For details, see **CHAPTER 25 OPTION BYTE**.

(4) On-chip debug security ID setting area

A 10-byte area of 000C4H to 000CDH and 010C4H to 010CDH can be used as an on-chip debug security ID setting area. Set the on-chip debug security ID of 10 bytes at 000C4H to 000CDH when the boot swap is not used and at 000C4H to 000CDH and 010C4H to 010CDH when the boot swap is used. For details, see **CHAPTER 27 ON-CHIP DEBUG FUNCTION**.

4.1.2 Mirror area

The RL78/G1D mirrors the code flash area of 00000H to 0FFFFH or 10000H to 1FFFFH, to F0000H to FFFFFH (the code flash area to be mirrored is set by the processor mode control register (PMC)).

By reading data from F0000H to FFFFFH, an instruction that does not have the ES register as an operand can be used, and thus the contents of the code flash can be read with the shorter code. However, the code flash area is not mirrored to the SFR, extended SFR, RAM, and use prohibited areas.

See **4.1 Memory Space** for the mirror area of each product.

The mirror area can only be read and no instruction can be fetched from this area.

The following show examples.

Example R5F11AGG (Flash memory: 128 KB, RAM: 12 KB)

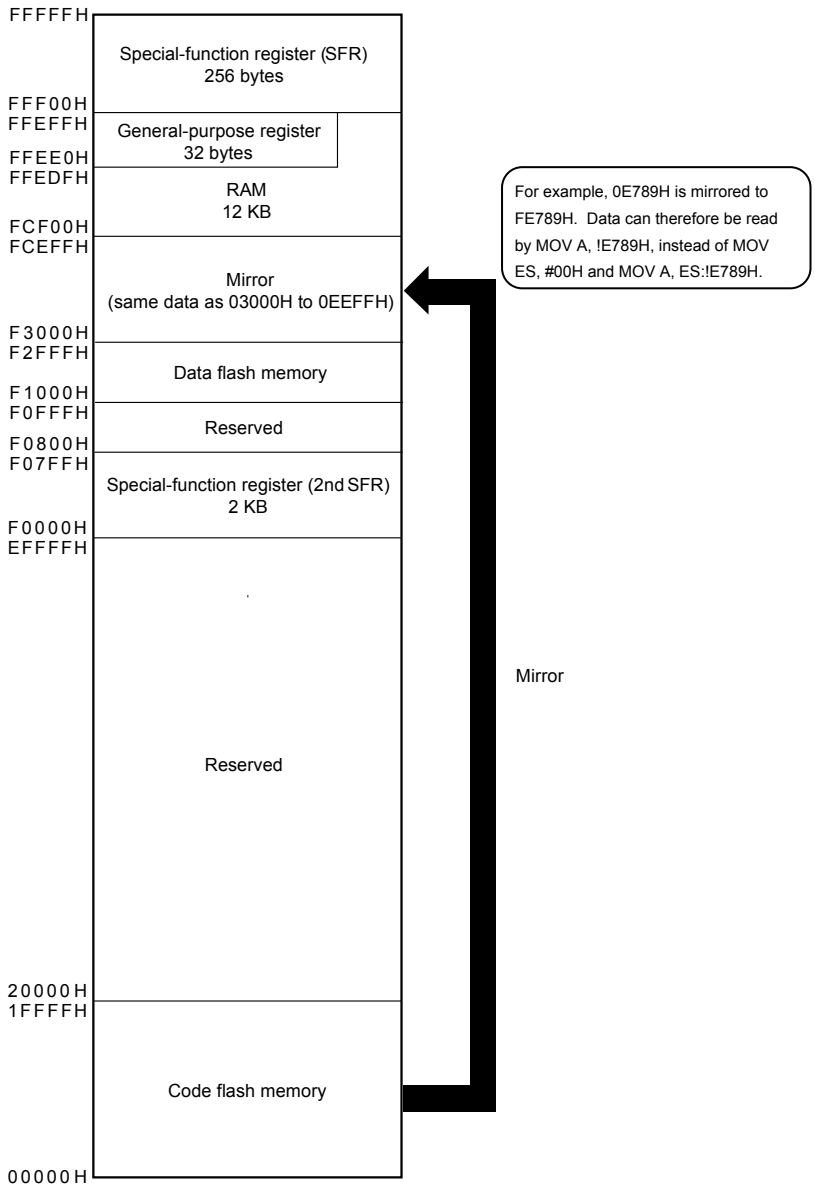

The PMC register is described below.

- **Processor mode control register (PMC)**

  This register sets the flash memory space for mirroring to area from F0000H to FFFFFH.

  The PMC register can be set by a 1-bit or 8-bit memory manipulation instruction.

  Reset signal generation sets this register to 00H.

Figure 4-4. Format of Configuration of Processor Mode Control Register (PMC)

Address: FFFFEH After reset: 00H R/W

Symbol	7	6	5	4	3	2	1	<0>
PMC	0	0	0	0	0	0	0	MAA

MAA	Selection of flash memory space for mirroring to area from F0000H to FFFFFH
0	00000H to 0FFFFH is mirrored to F0000H to FFFFFH
1	10000H to 1FFFFH is mirrored to F0000H to FFFFFH

Caution After setting the PMC register, wait for at least one instruction and access the mirror area.

4.1.3 Internal data memory space

The RL78/G1D products incorporate the following RAMs.

Table 4-4. Internal RAM Capacity

Part Number	Internal RAM
R5F11AGG	12288 × 8 bits (FCF00H to FFEFFH)
R5F11AGH	16384 × 8 bits (FBF00H to FFEFFH)
R5F11AGJ	20480 × 8 bits (FAF00H to FFEFFH)

The internal RAM can be used as a data area and a program area where instructions are fetched (it is prohibited to use the general-purpose register area for fetching instructions). Four general-purpose register banks consisting of eight 8-bit registers per bank are assigned to the 32-byte area of FFEE0H to FFEFFH of the internal RAM area.

The internal RAM is used as stack memory.

Cautions 1. It is prohibited to use the general-purpose register (FFEE0H to FFEFFH) space for fetching instructions or as a stack area.

2. Do not allocate RAM addresses which are used as a stack area, a data buffer, a branch destination of vector interrupt processing, and a DMA transfer destination/transfer source to the area FFE20H to FFEDFH when performing self-programming and rewriting the data flash memory.

3. Use of the RAM areas of the following products is prohibited when performing self-programming and rewriting the data flash memory, because these areas are used for each library.

R5F11AGJ : FAF00H to FB309H

4.1.4 Special function register (SFR) area

On-chip peripheral hardware special function registers (SFRs) are allocated in the area FFF00H to FFFFFH (see **Table 4-5** in **4.2.4 Special function registers (SFRs)**).

Caution Do not access addresses to which SFRs are not assigned.

4.1.5 Extended special function register (2nd SFR: 2nd Special Function Register) area

On-chip peripheral hardware special function registers (2nd SFRs) are allocated in the area F0000H to F07FFH (see **Table 4-6** in **4.2.5 Extended Special function registers (2nd SFRs: 2nd Special Function Registers)**).

SFRs other than those in the SFR area (FFF00H to FFFFFH) are allocated to this area. An instruction that accesses the extended SFR area, however, is 1 byte longer than an instruction that accesses the SFR area.

Caution Do not access addresses to which extended SFRs are not assigned.

4.1.6 Data memory addressing

Addressing refers to the method of specifying the address of the instruction to be executed next or the address of the register or memory relevant to the execution of instructions.

Several addressing modes are provided for addressing the memory relevant to the execution of instructions for the RL78/G1D, based on operability and other considerations. In particular, special addressing methods designed for the functions of the special function registers (SFR) and general-purpose registers are available for use. Figures 4-5 to 4-7 show correspondence between data memory and addressing. For details of each addressing, see **4.4 Addressing for Processing Data Addresses**.

Figure 4-5. Correspondence Between Data Memory and Addressing (R5F11AGG)

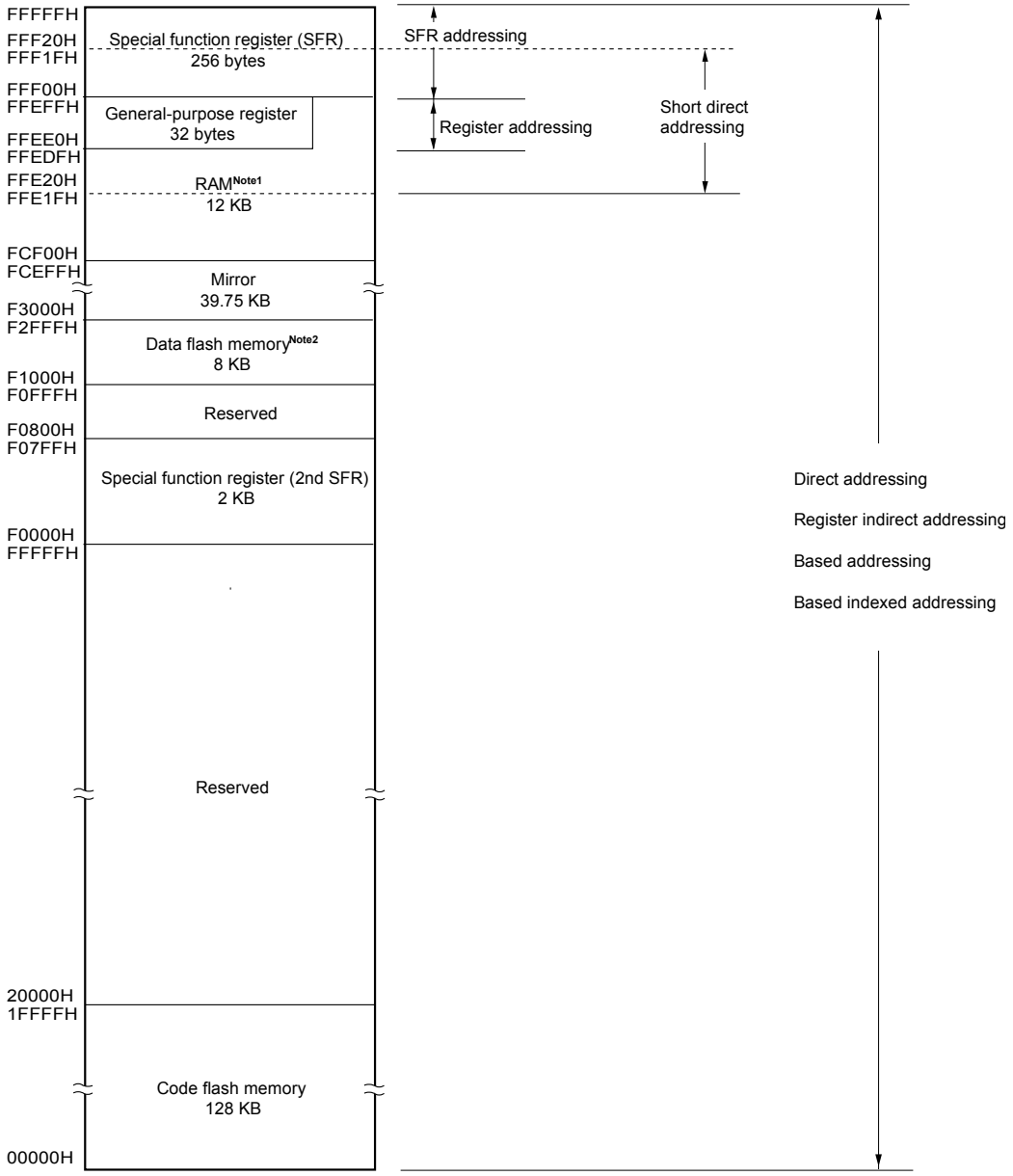

Figure 4-6. Correspondence Between Data Memory and Addressing (R5F11AGH)

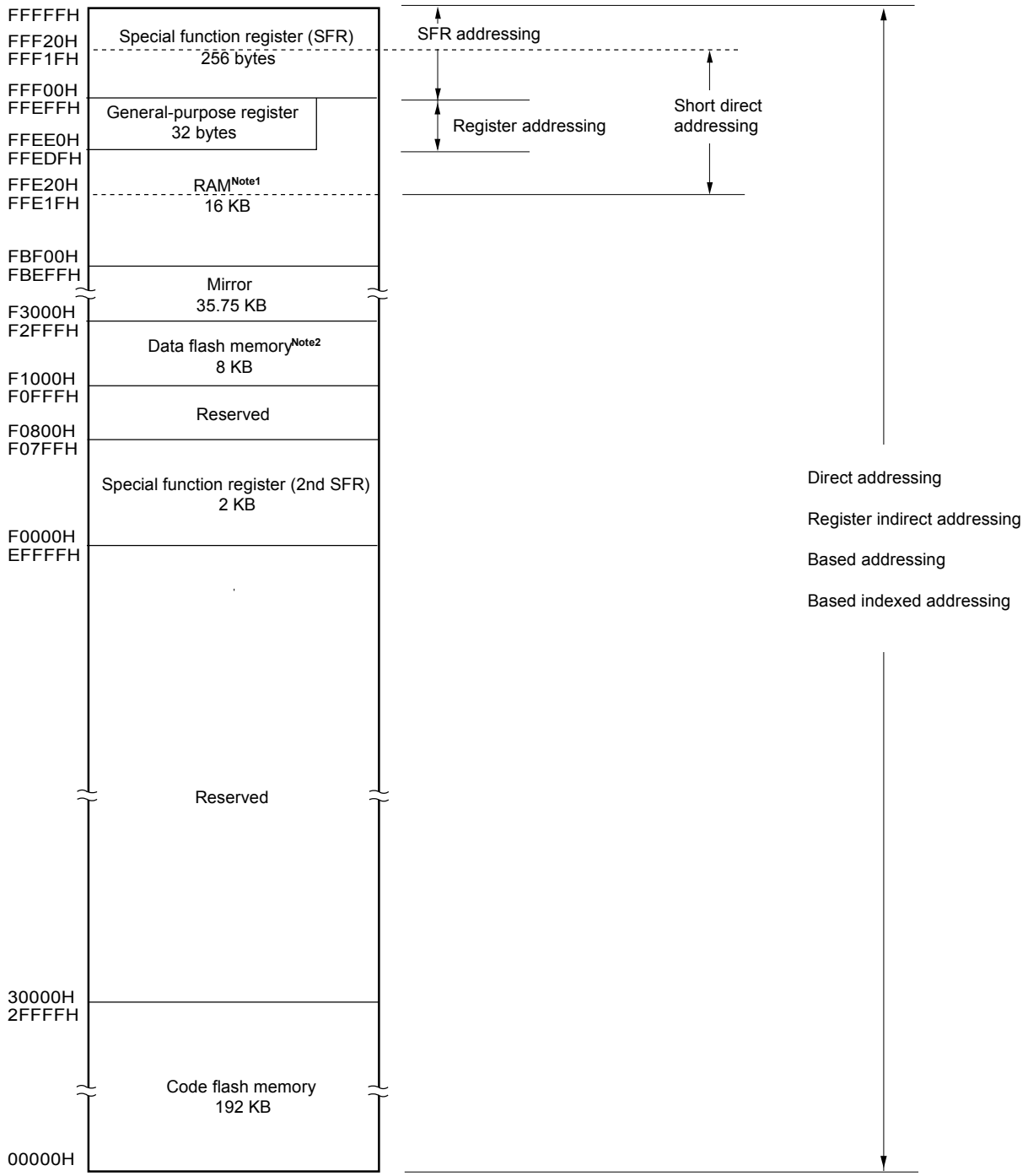

Figure 4-7. Correspondence Between Data Memory and Addressing (R5F11AGJ)

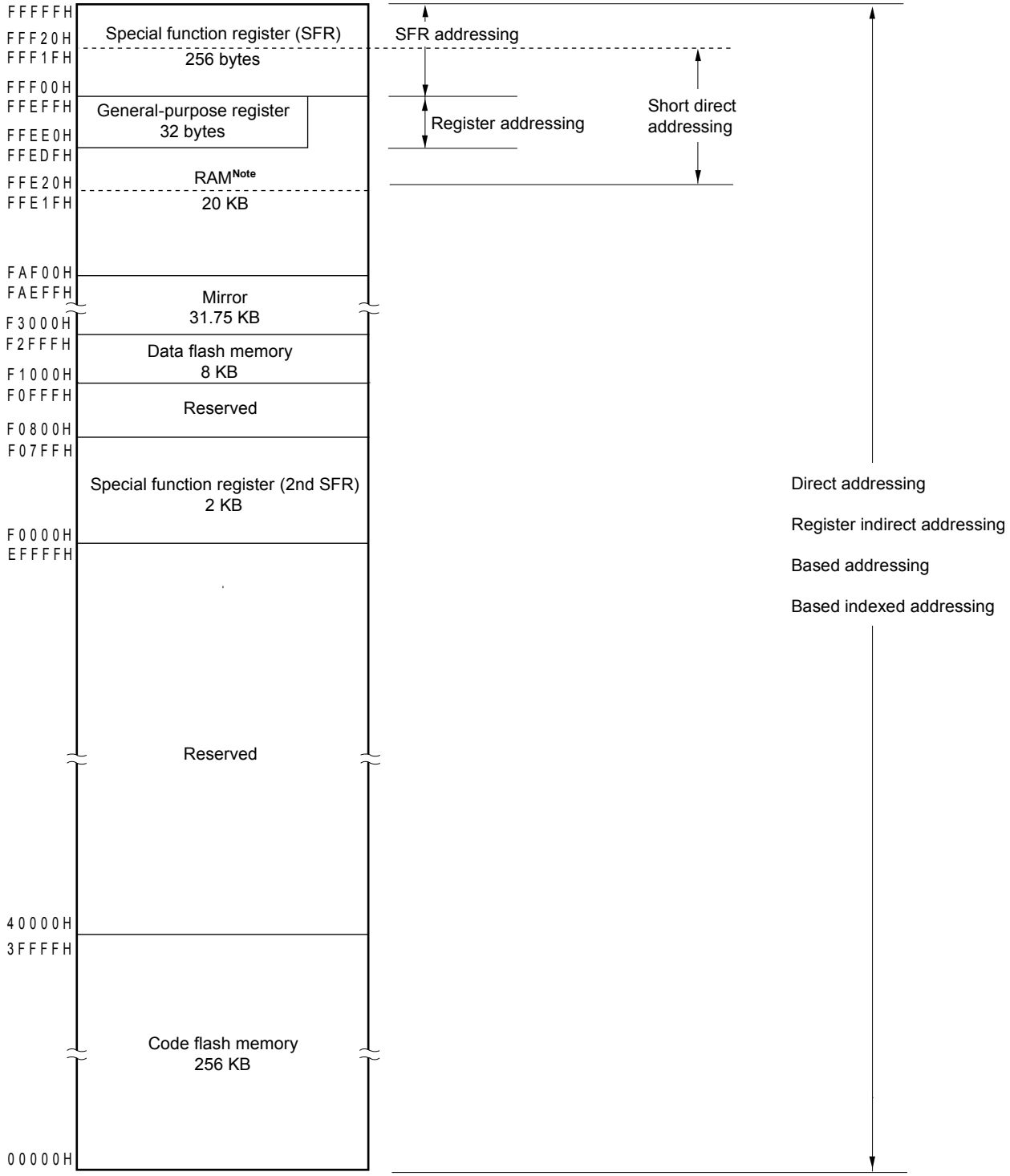

4.2 Processor Registers

The RL78/G1D products incorporate the following processor registers.

4.2.1 Control registers

The control registers control the program sequence, statuses and stack memory. The control registers consist of a program counter (PC), a program status word (PSW) and a stack pointer (SP).

(1) Program counter (PC)

The program counter is a 20-bit register that holds the address information of the next program to be executed.

In normal operation, PC is automatically incremented according to the number of bytes of the instruction to be fetched.

When a branch instruction is executed, immediate data and register contents are set.

Reset signal generation sets the reset vector table values at addresses 0000H and 0001H to the 16 lower-order bits of the program counter. The four higher-order bits of the program counter are cleared to 0000.

Figure 4-8. Format of Program Counter

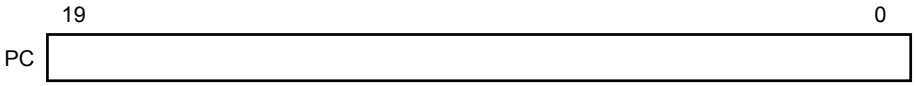

(2) Program status word (PSW)

The program status word is an 8-bit register consisting of various flags set/reset by instruction execution.

Program status word contents are stored in the stack area upon vectored interrupt request is acknowledged or PUSH PSW instruction execution and are restored upon execution of the RETB, RETI and POP PSW instructions. Reset signal generation sets the PSW register to 06H.

Figure 4-9. Format of Program Status Word

	7							0
PSW	IE	Z	RBS1	AC	RBS0	ISP1	ISP0	CY

(a) Interrupt enable flag (IE)

This flag controls the interrupt request acknowledge operations of the CPU.

When 0, the IE flag is set to the interrupt disabled (DI) state, and all maskable interrupt requests are disabled.

When 1, the IE flag is set to the interrupt enabled (EI) state and interrupt request acknowledgment is controlled with an in-service priority flag (ISP1, ISP0), an interrupt mask flag for various interrupt sources, and a priority specification flag.

The IE flag is reset (0) upon DI instruction execution or interrupt acknowledgment and is set (1) upon EI instruction execution.

(b) Zero flag (Z)

When the operation or comparison result is zero or equal, this flag is set (1). It is reset (0) in all other cases.

(c) Register bank select flags (RBS0, RBS1)

These are 2-bit flags to select one of the four register banks.

In these flags, the 2-bit information that indicates the register bank selected by SEL RBn instruction execution is stored.

(d) Auxiliary carry flag (AC)

If the operation result has a carry from bit 3 or a borrow at bit 3, this flag is set (1). It is reset (0) in all other cases.

(e) In-service priority flags (ISP1, ISP0)

This flag manages the priority of acknowledgeable maskable vectored interrupts. Vectored interrupt requests specified lower than the value of ISP0 and ISP1 flags by the priority specification flag registers (PRn0L, PRn0H, PRn1L, PRn1H, PRn2L, PRn2H) (see **17.3.3**) can not be acknowledged. Actual vectored interrupt request acknowledgment is controlled by the interrupt enable flag (IE).

Remark n = 0, 1

(f) Carry flag (CY)

This flag stores overflow and underflow upon add/subtract instruction execution. It stores the shift-out value upon rotate instruction execution and functions as a bit accumulator during bit operation instruction execution.

(3) Stack pointer (SP)

This is a 16-bit register to hold the start address of the memory stack area. Only the internal RAM area can be set as the stack area.

Figure 4-10. Format of Stack Pointer

	15															0
SP	SP15	SP14	SP13	SP12	SP11	SP10	SP9	SP8	SP7	SP6	SP5	SP4	SP3	SP2	SP1	0

In stack addressing through a stack pointer, the SP is decremented ahead of write (save) to the stack memory and is incremented after read (restored) from the stack memory.

Cautions 1. Since reset signal generation makes the SP contents undefined, be sure to initialize the SP before using the stack.

2. It is prohibited to use the general-purpose register (FFEE0H to FFEFFH) space as a stack area.

3. Do not allocate RAM addresses which are used as a stack area, a data buffer, a branch destination of vector interrupt processing, and a DMA transfer destination/transfer source to the area FFE20H to FFEDFH when performing self-programming and rewriting the data flash memory.

4. Use of the RAM areas of the following products is prohibited when performing self-programming and rewriting the data flash memory, because these areas are used for each library.

R5F11AGJ: FAF00H to FB309H

4.2.2 General-purpose registers

General-purpose registers are mapped at particular addresses (FFEE0H to FFEFFH) of the data memory. The general-purpose registers consists of 4 banks, each bank consisting of eight 8-bit registers (X, A, C, B, E, D, L, and H).

Each register can be used as an 8-bit register, and two 8-bit registers can also be used in a pair as a 16-bit register (AX, BC, DE, and HL).

Register banks to be used for instruction execution are set by the CPU control instruction (SEL RBn). Because of the 4-register bank configuration, an efficient program can be created by switching between a register for normal processing and a register for interrupt processing for each bank.

Caution It is prohibited to use the general-purpose register (FFEE0H to FFEFFH) space for fetching instructions or as a stack area.

Figure 4-11. Configuration of General-Purpose Registers

(a) Function name

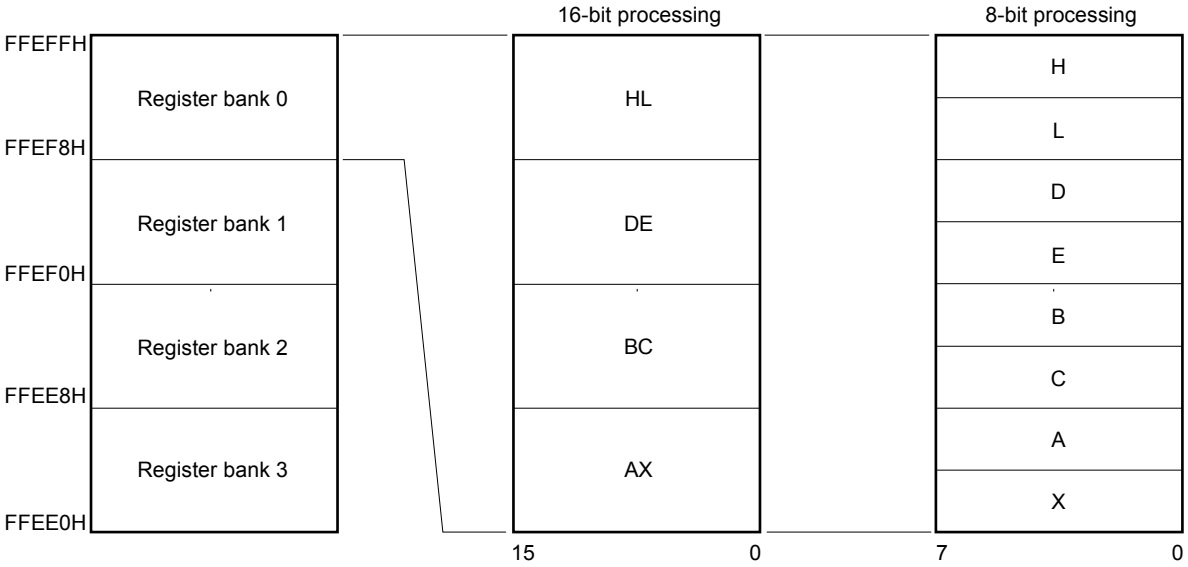

4.2.3 ES and CS registers

The ES register and CS register are used to specify the higher address for data access and when a branch instruction is executed (register direct addressing), respectively.

The default value of the ES register after reset is 0FH, and that of the CS register is 00H.

Figure 4-12. Configuration of ES and CS Registers

	7	6	5	4	3	2	1	0
ES	0	0	0	0	ES3	ES2	ES1	ES0

	7	6	5	4	3	2	1	0
CS	0	0	0	0	CS3	CS2	CS1	CS0

Though the data area which can be accessed with 16-bit addresses is the 64 Kbytes from F0000H to FFFFFH, using the ES register as well extends this to the 1 MB from 00000H to FFFFFH.

Figure 4-13 Extension of Data Area Which Can Be Accessed

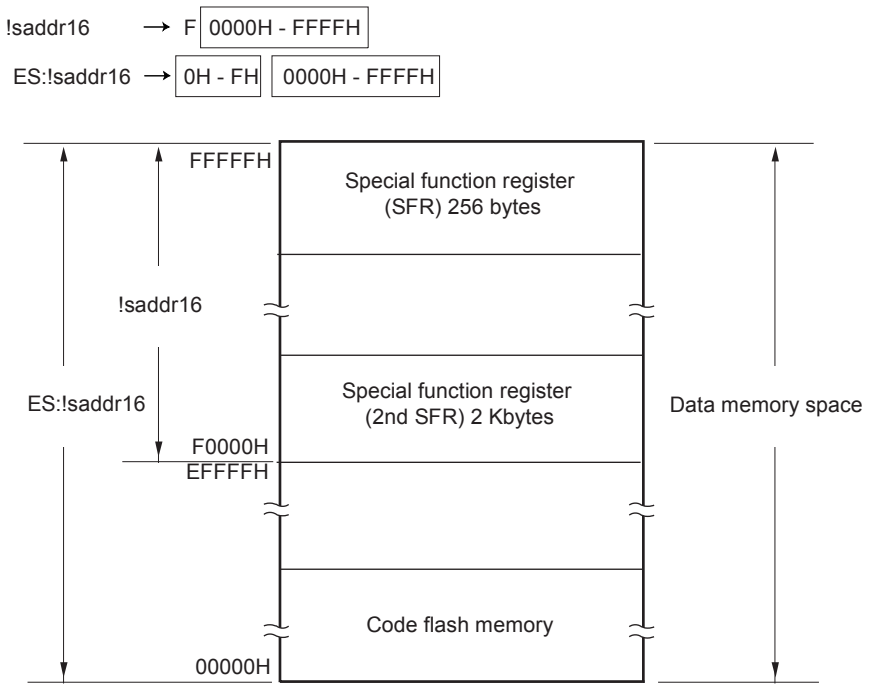

4.2.4 Special function registers (SFRs)

Unlike a general-purpose register, each SFR has a special function.

SFRs are allocated to the FFF00H to FFFFFH area.

SFRs can be manipulated like general-purpose registers, using operation, transfer, and bit manipulation instructions. The manipulable bit units, 1, 8, and 16, depend on the SFR type.

Each manipulation bit unit can be specified as follows.

- 1-bit manipulation
  Describe as follows for the 1-bit manipulation instruction operand (sfr.bit).
  When the bit name is defined: <Bit name>
  When the bit name is not defined: <Register name>.<Bit number> or <Address>.<Bit number>
- 8-bit manipulation
  Describe the symbol defined by the assembler for the 8-bit manipulation instruction operand (sfr). This manipulation can also be specified with an address.
- 16-bit manipulation
  Describe the symbol defined by the assembler for the 16-bit manipulation instruction operand (sfrp). When specifying an address, describe an even address.

Table 4-5 gives a list of the SFRs. The meanings of items in the table are as follows.

- Symbol
  Symbol indicating the address of a special function register. It is a reserved word in the assembler, and is defined as an sfr variable using the #pragma sfr directive in the compiler. When using the assembler, debugger, and simulator, symbols can be written as an instruction operand.
- R/W
  Indicates whether the corresponding SFR can be read or written.
  R/W: Read/write enable
  R: Read only
  W: Write only
- Manipulable bit units
  "✓" indicates the manipulable bit unit (1, 8, or 16). "–" indicates a bit unit for which manipulation is not possible.
- After reset
  Indicates each register status upon reset signal generation.

Caution Do not access addresses to which extended SFRs are not assigned.

Remark For extended SFRs (2nd SFRs), see **4.2.5 Extended special function registers (2nd SFRs: 2nd Special Function Registers)**.

Table 4-5. SFR List (1/4)

Address	Special Function Register (SFR) Name	Symbol		R/W	Manipulable Bit Range			After Reset
					1-bit	8-bit	16-bit	
FFF00H	Port register 0	P0		R/W	✓	✓	–	00H
FFF01H	Port register 1	P1		R/W	✓	✓	–	00H
FFF02H	Port register 2	P2		R/W	✓	✓	–	00H
FFF03H	Port register 3	P3		R/W	✓	✓	–	00H
FFF04H	Port register 4	P4		R/W	✓	✓	–	00H
FFF05H	Port register 5	P5		R/W	✓	✓	–	00H
FFF06H	Port register 6	P6		R/W	✓	✓	–	00H
FFF07H	Port register 7	P7		R/W	✓	✓	–	00H
FFF0CH	Port register 12	P12		R/W	✓	✓	–	Undefined
FFF0DH	Port register 13	P13		R/W	✓	✓	–	Undefined
FFF0EH	Port register 14	P14		R/W	✓	✓	–	00H
FFF10H	Serial data register 00	TXD0/SIO00	SDR00	R/W	–	✓	✓	0000H
FFF11H		–			–	–		
FFF12H	Serial data register 01	RXD0/SIO01	SDR01	R/W	–	✓	✓	0000H
FFF13H		–			–	–		
FFF18H	Timer data register 00	TDR00		R/W	–	–	✓	0000H
FFF19H								
FFF1AH	Timer data register 01	TDR01L	TDR01	R/W	–	✓	✓	0000H
FFF1BH		TDR01H						
FFF1EH	10-bit A/D conversion result register	ADCR		R	–	–	✓	0000H
FFF1FH	8-bit A/D conversion result register	ADCRH		R	–	✓	–	00H
FFF20H	Port mode register 0	PM0		R/W	✓	✓	–	FFH
FFF21H	Port mode register 1	PM1		R/W	✓	✓	–	FFH
FFF22H	Port mode register 2	PM2		R/W	✓	✓	–	FFH
FFF23H	Port mode register 3	PM3		R/W	✓	✓	–	FFH
FFF24H	Port mode register 4	PM4		R/W	✓	✓	–	FFH
FFF25H	Port mode register 5	PM5		R/W	✓	✓	–	FFH
FFF26H	Port mode register 6	PM6		R/W	✓	✓	–	FFH
FFF27H	Port mode register 7	PM7		R/W	✓	✓	–	FFH
FFF2CH	Port mode register 12	PM12		R/W	✓	✓	–	FFH
FFF2EH	Port mode register 14	PM14		R/W	✓	✓	–	FFH
FFF30H	A/D converter mode register 0	ADM0		R/W	✓	✓	–	00H
FFF31H	Analog input channel specification register	ADS		R/W	✓	✓	–	00H
FFF32H	A/D converter mode register 1	ADM1		R/W	✓	✓	–	00H

Table 4-5. SFR List (2/4)

Address	Special Function Register (SFR) Name	Symbol		R/W	Manipulable Bit Range			After Reset
					1-bit	8-bit	16-bit	
FFF38H	External interrupt rising edge enable register 0	EGP0		R/W	✓	✓	–	00H
FFF39H	External interrupt falling edge enable register 0	EGN0		R/W	✓	✓	–	00H
FFF3AH	External interrupt rising edge enable register 0	EGP1		R/W	✓	✓	–	00H
FFF3BH	External interrupt falling edge enable register 0	EGN1		R/W	✓	✓	–	00H
FFF44H	Serial data register 02	TXD1/SIO10	SDR02	R/W	–	✓	✓	0000H
FFF45H		–			–	–		
FFF46H	Serial data register 03	RXD1/SIO11	SDR03	R/W	–	✓	✓	0000H
FFF47H		–			–	–		
FFF48H	Serial data register 10	TXD2/SIO20	SDR10	R/W	–	✓	✓	0000H
FFF49H		–			–	–		
FFF4AH	Serial data register 11	RXD2/SIO21	SDR11	R/W	–	✓	✓	0000H
FFF4BH		–			–	–		
FFF50H	IICA shift register 0	IICA0		R/W	–	✓	–	00H
FFF51H	IICA status register 0	IICS0		R	✓	✓	–	00H
FFF52H	IICA flag register 0	IICF0		R/W	✓	✓	–	00H
FFF64H	Timer data register 02	TDR02		R/W	–	–	✓	0000H
FFF65H								
FFF66H	Timer data register 03	TDR03L	TDR03	R/W	–	✓	✓	0000H
FFF67H		TDR03H						
FFF68H	Timer data register 04	TDR04		R/W	–	–	✓	0000H
FFF69H								
FFF6AH	Timer data register 05	TDR05		R/W	–	–	✓	0000H
FFF6BH								
FFF6CH	Timer data register 06	TDR06		R/W	–	–	✓	0000H
FFF6DH								
FFF6EH	Timer data register 07	TDR07		R/W	–	–	✓	0000H
FFF6FH								
FFF90H	Interval timer control register	ITMC		R/W	–	–	✓	0FFFH
FFF91H								
FFF92H	Second count register	SEC		R/W	–	✓	–	00H
FFF93H	Minute count register	MIN		R/W	–	✓	–	00H

Table 4-5. SFR List (3/4)

Address	Special Function Register (SFR) Name	Symbol		R/W	Manipulable Bit Range			After Reset
					1-bit	8-bit	16-bit	
FFF94H	Hour count register	HOUR		R/W	–	✓	–	12H[Note 1]
FFF95H	Week count register	WEEK		R/W	–	✓	–	00H
FFF96H	Day count register	DAY		R/W	–	✓	–	01H
FFF97H	Month count register	MONTH		R/W	–	✓	–	00H
FFF98H	Year count register	YEAR		R/W	–	✓	–	00H
FFF99H	Watch error correction register	SUBCUD		R/W	–	✓	–	00H
FFF9AH	Alarm minute register	ALARMWM		R/W	–	✓	–	00H
FFF9BH	Alarm hour register	ALARMWH		R/W	–	✓	–	12H
FFF9CH	Alarm week register	ALARMWW		R/W	–	✓	–	00H
FFF9DH	Real-time clock control register 0	RTCC0		R/W	✓	✓	–	00H
FFF9EH	Real-time clock control register 1	RTCC1		R/W	✓	✓	–	00H
FFFA0H	Clock operation mode control register	CMC		R/W	–	✓	–	00H
FFFA1H	Clock operation status control register	CSC		R/W	✓	✓	–	C0H
FFFA2H	Oscillation stabilization time counter status register	OSTC		R	✓	✓	–	00H
FFFA3H	Oscillation stabilization time select register	OSTS		R/W	–	✓	–	07H
FFFA4H	System clock control register	CKC		R/W	✓	✓	–	00H
FFFA5H	Clock output select register 0	CKS0		R/W	✓	✓	–	00H
FFFA8H	Reset control flag register	RESF		R	–	✓	–	Undefined[Note 2]
FFFA9H	Voltage detection register	LVIM		R/W	✓	✓	–	00H[Note 2]
FFFAAH	Voltage detection level register	LVIS		R/W	✓	✓	–	00H/01H/81H[Note 2]
FFFABH	Watchdog timer enable register	WDTE		R/W	–	✓	–	1AH/9AH[Note 3]
FFFACH	CRC input register	CRCIN		R/W	–	✓	–	00H
FFFB0H	DMA SFR address register 0	DSA0		R/W	–	✓	–	00H
FFFB1H	DMA SFR address register 1	DSA1		R/W	–	✓	–	00H
FFFB2H	DMA RAM address register 0	DRA0L	DRA0	R/W	–	✓	✓	0000H
FFFB3H		DRA0H		R/W				
FFFB4H	DMA RAM address register 1	DRA1L	DRA1	R/W	–	✓	✓	0000H
FFFB5H		DRA1H		R/W				
FFFB6H	DMA byte count register 0	DBC0L	DBC0	R/W	–	✓	✓	0000H
FFFB7H		DBC0H		R/W				
FFFB8H	DMA byte count register 1	DBC1L	DBC1	R/W	–	✓	✓	0000H
FFFB9H		DBC1H		R/W				

(**Notes** are listed on the next page.)

Notes 1. The value of this register is 00H if the AMPM bit (bit 3 of real-time clock control register 0 (RTCC0)) is set to 1 after reset.

2. The reset values of the registers vary depending on the reset source as shown below.

Register \ Reset Source		$\overline{\text{RESET}}$ Input	Reset by POR	Reset by Execution of Illegal Instruction	Reset by WDT	Reset by RAM parity error	Reset by illegal-memory access	Reset by LVD
RESF	TRAP bit	Cleared (0)		Set (1)	Held			Held
	WDTRF bit			Held	Set (1)	Held		
	RPERF bit			Held		Set (1)	Held	
	IAWRF bit			Held			Set (1)	
	LVIRF bit			Held				Set (1)
LVIM	LVISEN bit	Cleared (0)						Held
	LVIOMSK bit	Held						
	LVIF bit							
LVIS		Cleared (00H/01H/81H)						

3. The reset value of the WDTE register is determined by the setting of the option byte.

Table 4-5. SFR List (4/4)

Address	Special Function Register (SFR) Name	Symbol		R/W	Manipulable Bit Range			After Reset
					1-bit	8-bit	16-bit	
FFFBAH	DMA mode control register 0	DMC0		R/W	✓	✓	–	00H
FFFBBH	DMA mode control register 1	DMC1		R/W	✓	✓	–	00H
FFFBCH	DMA operation control register 0	DRC0		R/W	✓	✓	–	00H
FFFBDH	DMA operation control register 1	DRC1		R/W	✓	✓	–	00H
FFFD0H	Interrupt request flag register 2	IF2L	IF2	R/W	✓	✓	✓	0000H
FFFD1H		IF2H		R/W				
FFFD2H	Interrupt request flag register 3L	IF3L	IF3	R/W	✓	✓	✓	00H
FFFD4H	Interrupt mask flag register 2	MK2L	MK2	R/W	✓	✓	✓	FFFFH
FFFD5H		MK2H		R/W				
FFFD6H	Interrupt mask flag register 3L	MK3L	MK3	R/W	✓	✓	✓	FFH
FFFD8H	Priority specification flag register 02	PR02L	PR02	R/W	✓	✓	✓	FFFFH
FFFD9H		PR02H		R/W				
FFFDAH	Priority specification flag register 03L	PR03L	PR03	R/W	✓	✓	✓	FFH
FFFDCH	Priority specification flag register 12	PR12L	PR12	R/W	✓	✓	✓	FFFFH
FFFDDH		PR12H		R/W				
FFFDEH	Priority specification flag register 13L	PR13L	PR13	R/W	✓	✓	✓	FFH
FFFE0H	Interrupt request flag register 0	IF0L	IF0	R/W	✓	✓	✓	0000H
FFFE1H		IF0H		R/W				
FFFE2H	Interrupt request flag register 1	IF1L	IF1	R/W	✓	✓	✓	0000H
FFFE3H		IF1H		R/W				
FFFE4H	Interrupt mask flag register 0	MK0L	MK0	R/W	✓	✓	✓	FFFFH
FFFE5H		MK0H		R/W				
FFFE6H	Interrupt mask flag register 1	MK1L	MK1	R/W	✓	✓	✓	FFFFH
FFFE7H		MK1H		R/W				
FFFE8H	Priority specification flag register 00	PR00L	PR00	R/W	✓	✓	✓	FFFFH
FFFE9H		PR00H		R/W				
FFFEAH	Priority specification flag register 01	PR01L	PR01	R/W	✓	✓	✓	FFFFH
FFFEBH		PR01H		R/W				
FFFECH	Priority specification flag register 10	PR10L	PR10	R/W	✓	✓	✓	FFFFH
FFFEDH		PR10H		R/W				
FFFEEH	Priority specification flag register 11	PR11L	PR11	R/W	✓	✓	✓	FFFFH
FFFEFH		PR11H		R/W				
FFFF0H	Multiplication/division data register A (L)	MDAL		R/W	–	–	✓	0000H
FFFF1H								
FFFF2H	Multiplication/division data register A (H)	MDAH		R/W	–	–	✓	0000H
FFFF3H								
FFFF4H	Multiplication/division data register B (H)	MDBH		R/W	–	–	✓	0000H
FFFF5H								
FFFF6H	Multiplication/division data register B (L)	MDBL		R/W	–	–	✓	0000H
FFFF7H								
FFFFEH	Processor mode control register	PMC		R/W	✓	✓	–	00H

Remark For extended SFRs (2nd SFRs), see **Table 4-6 Extended SFR (2nd SFR) List**.

4.2.5 Extended special function registers (2nd SFRs: 2nd Special Function Registers)

Unlike a general-purpose register, each extended SFR (2nd SFR) has a special function.

Extended SFRs are allocated to the F0000H to F07FFH area. SFRs other than those in the SFR area (FFF00H to FFFFFH) are allocated to this area. An instruction that accesses the extended SFR area, however, is 1 byte longer than an instruction that accesses the SFR area.

Extended SFRs can be manipulated like general-purpose registers, using operation, transfer, and bit manipulation instructions. The manipulable bit units, 1, 8, and 16, depend on the SFR type.

Each manipulation bit unit can be specified as follows.

- 1-bit manipulation
  Describe as follows for the 1-bit manipulation instruction operand (!addr16.bit)
  When the bit name is defined: <Bit name>
  When the bit name is not defined: <Register name>.<Bit number> or <Address>.<Bit number>
- 8-bit manipulation
  Describe the symbol reserved by the assembler for the 8-bit manipulation instruction operand (!addr16). This manipulation can also be specified with an address.
- 16-bit manipulation
  Describe the symbol reserved by the assembler for the 16-bit manipulation instruction operand (!addr16). When specifying an address, describe an even address.

Table 4-6 gives a list of the extended SFRs. The meanings of items in the table are as follows.

- Symbol
  Symbol indicating the address of an extended SFR. It is a reserved word in the assembler, and is defined as an sfr variable using the #pragma sfr directive in the compiler. When using the assembler, debugger, and simulator, symbols can be written as an instruction operand.
- R/W
  Indicates whether the corresponding extended SFR can be read or written.
  R/W: Read/write enable
  R: Read only
  W: Write only
- Manipulable bit units
  "✓" indicates the manipulable bit unit (1, 8, or 16). "–" indicates a bit unit for which manipulation is not possible.
- After reset
  Indicates each register status upon reset signal generation.

Caution Do not access addresses to which extended SFRs (2nd SFRs) are not assigned.

Remark For SFRs in the SFR area, see **4.2.4 Special function registers (SFRs)**.

Table 4-6. Extended SFR (2nd SFR) List (1/5)

Address	Special Function Register (SFR) Name	Symbol	R/W	Manipulable Bit Range			After Reset
				1-bit	8-bit	16-bit	
F0010H	A/D converter mode register 2	ADM2	R/W	✓	✓	–	00H
F0011H	Conversion result comparison upper limit setting register	ADUL	R/W	–	✓	–	FFH
F0012H	Conversion result comparison lower limit setting register	ADLL	R/W	–	✓	–	00H
F0013H	A/D test register	ADTES	R/W	–	✓	–	00H
F0030H	Pull-up resistor option register 0	PU0	R/W	✓	✓	–	00H
F0031H	Pull-up resistor option register 1	PU1	R/W	✓	✓	–	00H
F0033H	Pull-up resistor option register 3	PU3	R/W	✓	✓	–	00H
F0034H	Pull-up resistor option register 4	PU4	R/W	✓	✓	–	01H
F003CH	Pull-up resistor option register 12	PU12	R/W	✓	✓	–	00H
F003EH	Pull-up resistor option register 14	PU14	R/W	✓	✓	–	00H
F0040H	Port input mode register 0	PIM0	R/W	✓	✓	–	00H
F0041H	Port input mode register 1	PIM1	R/W	✓	✓	–	00H
F0050H	Port output mode register 0	POM0	R/W	✓	✓	–	00H
F0051H	Port output mode register 1	POM1	R/W	✓	✓	–	00H
F0060H	Port mode control register 0	PMC0	R/W	✓	✓	–	FFH
F006CH	Port mode control register 12	PMC12	R/W	✓	✓	–	FFH
F0070H	Noise filter enable register 0	NFEN0	R/W	✓	✓	–	00H
F0071H	Noise filter enable register 1	NFEN1	R/W	✓	✓	–	00H
F0074H	Timer input select register 0	TIS0	R/W	–	✓	–	00H
F0076H	A/D port configuration register	ADPC	R/W	–	✓	–	00H
F0077H	Peripheral I/O redirection register	PIOR	R/W	–	✓	–	00H
F0078H	Invalid memory access detection control register	IAWCTL	R/W	–	✓	–	00H
F007DH	Global digital input disable register	GDIDIS	R/W	✓	✓	–	00H
F0090H	Data flash control register	DFLCTL	R/W	✓	✓	–	00H
F00A0H	High-speed on-chip oscillator trimming register	HIOTRM	R/W	–	✓	–	Undefined Note 1
F00A8H	High-speed on-chip oscillator frequency select register	HOCODIV	R/W	–	✓	–	Undefined Note 2
F00E0H	Multiplication/division data register C (L)	MDCL	R/W	–	–	✓	0000H
F00E2H	Multiplication/division data register C (H)	MDCH	R/W	–	–	✓	0000H
F00E8H	Multiplication/division control register	MDUC	R/W	✓	✓	–	00H
F00F0H	Peripheral enable register 0	PER0	R/W	✓	✓	–	00H
F00F3H	Subsystem clock supply mode control register	OSMC	R/W	–	✓	–	00H
F00F5H	RAM parity error control register	RPECTL	R/W	✓	✓	–	00H
F00FEH	BCD adjust result register	BCDADJ	R	–	✓	–	Undefined

Notes 1. The value after a reset is adjusted at the time of shipment.

2. The value after a reset is a value set in FRQSEL2 to FRQSEL0 of the option byte (000C2H).

Table 4-6. Extended SFR (2nd SFR) List (2/5)

Address	Special Function Register (SFR) Name	Symbol		R/W	Manipulable Bit Range			After Reset
					1-bit	8-bit	16-bit	
F0100H	Serial status register 00	SSR00L	SSR00	R	–	✓	✓	0000H
F0101H		–			–	–		
F0102H	Serial status register 01	SSR01L	SSR01	R	–	✓	✓	0000H
F0103H		–			–	–		
F0104H	Serial status register 02	SSR02L	SSR02	R	–	✓	✓	0000H
F0105H		–			–	–		
F0106H	Serial status register 03	SSR03L	SSR03	R	–	✓	✓	0000H
F0107H		–			–	–		
F0108H	Serial flag clear trigger register 00	SIR00L	SIR00	R/W	–	✓	✓	0000H
F0109H		–			–	–		
F010AH	Serial flag clear trigger register 01	SIR01L	SIR01	R/W	–	✓	✓	0000H
F010BH		–			–	–		
F010CH	Serial flag clear trigger register 02	SIR02L	SIR02	R/W	–	✓	✓	0000H
F010DH		–			–	–		
F010EH	Serial flag clear trigger register 03	SIR03L	SIR03	R/W	–	✓	✓	0000H
F010FH		–			–	–		
F0110H	Serial mode register 00	SMR00		R/W	–	–	✓	0020H
F0111H								
F0112H	Serial mode register 01	SMR01		R/W	–	–	✓	0020H
F0113H								
F0114H	Serial mode register 02	SMR02		R/W	–	–	✓	0020H
F0115H								
F0116H	Serial mode register 03	SMR03		R/W	–	–	✓	0020H
F0117H								
F0118H	Serial communication operation setting register 00	SCR00		R/W	–	–	✓	0087H
F0119H								
F011AH	Serial communication operation setting register 01	SCR01		R/W	–	–	✓	0087H
F011BH								
F011CH	Serial communication operation setting register 02	SCR02		R/W	–	–	✓	0087H
F011DH								
F011EH	Serial communication operation setting register 03	SCR03		R/W	–	–	✓	0087H
F011FH								
F0120H	Serial channel enable status register 0	SE0L	SE0	R	✓	✓	✓	0000H
F0121H		–			–	–		
F0122H	Serial channel start register 0	SS0L	SS0	R/W	✓	✓	✓	0000H
F0123H		–			–	–		
F0124H	Serial channel stop register 0	ST0L	ST0	R/W	✓	✓	✓	0000H
F0125H		–			–	–		
F0126H	Serial clock select register 0	SPS0L	SPS0	R/W	–	✓	✓	0000H
F0127H		–			–	–		

Notes 1. The value after a reset is adjusted at the time of shipment.

2. The value after a reset is a value set in FRQSEL2 to FRQSEL0 of the option byte (000C2H).

Table 4-6. Extended SFR (2nd SFR) List (3/5)

Address	Special Function Register (SFR) Name	Symbol		R/W	Manipulable Bit Range			After Reset
					1-bit	8-bit	16-bit	
F0128H	Serial output register 0	SO0		R/W	–	–	✓	0F0FH
F0129H								
F012AH	Serial output enable register 0	SOE0L	SOE0	R/W	✓	✓	✓	0000H
F012BH		–			–	–		
F0134H	Serial output level register 0	SOL0L	SOL0	R/W	–	✓	✓	0000H
F0135H		–			–	–		
F0138H	Serial standby control register 0	SSC0L	SSC0	R/W	–	✓	✓	0000H
		–			–	–		
F0140H	Serial status register 10	SSR10L	SSR10	R	–	✓	✓	0000H
F0141H		–			–	–		
F0142H	Serial status register 11	SSR11L	SSR11	R	–	✓	✓	0000H
F0143H		–			–	–		
F0148H	Serial flag clear trigger register 10	SIR10L	SIR10	R/W	–	✓	✓	0000H
F0149H		–			–	–		
F014AH	Serial flag clear trigger register 11	SIR11L	SIR11	R/W	–	✓	✓	0000H
F014BH		–			–	–		
F0150H	Serial mode register 10	SMR10		R/W	–	–	✓	0020H
F0151H								
F0152H	Serial mode register 11	SMR11		R/W	–	–	✓	0020H
F0153H								
F0158H	Serial communication operation setting register 10	SCR10		R/W	–	–	✓	0087H
F015AH	Serial communication operation setting register 11	SCR11		R/W	–	–	✓	0087H
F0160H	Serial channel enable status register 1	SE1L	SE1	R	✓	✓	✓	0000H
F0161H		–			–	–		
F0162H	Serial channel start register 1	SS1L	SS1	R/W	✓	✓	✓	0000H
F0163H		–			–	–		
F0164H	Serial channel stop register 1	ST1L	ST1	R/W	✓	✓	✓	0000H
F0165H		–			–	–		
F0166H	Serial clock select register 1	SPS1L	SPS1	R/W	–	✓	✓	0000H
F0167H		–			–	–		
F0168H	Serial output register 1	SO1		R/W	–	–	✓	0F0FH
F0169H								
F016AH	Serial output enable register 1	SOE1L	SOE1	R/W	✓	✓	✓	0000H
F016BH		–			–	–		
F0180H	Timer counter register 00	TCR00		R	–	–	✓	FFFFH
F0181H								
F0182H	Timer counter register 01	TCR01		R	–	–	✓	FFFFH
F0183H								
F0184H	Timer counter register 02	TCR02		R	–	–	✓	FFFFH
F0185H								
F0186H	Timer counter register 03	TCR03		R	–	–	✓	FFFFH
F0187H								

Table 4-6. Extended SFR (2nd SFR) List (4/5)

Address	Special Function Register (SFR) Name	Symbol		R/W	Manipulable Bit Range			After Reset
					1-bit	8-bit	16-bit	
F0188H	Timer counter register 04	TCR04		R	–	–	✓	FFFFH
F0189H								
F018AH	Timer counter register 05	TCR05		R	–	–	✓	FFFFH
F018BH								
F018CH	Timer counter register 06	TCR06		R	–	–	✓	FFFFH
F018DH								
F018EH	Timer counter register 07	TCR07		R	–	–	✓	FFFFH
F018FH								
F0190H	Timer mode register 00	TMR00		R/W	–	–	✓	0000H
F0191H								
F0192H	Timer mode register 01	TMR01		R/W	–	–	✓	0000H
F0193H								
F0194H	Timer mode register 02	TMR02		R/W	–	–	✓	0000H
F0195H								
F0196H	Timer mode register 03	TMR03		R/W	–	–	✓	0000H
F0197H								
F0198H	Timer mode register 04	TMR04		R/W	–	–	✓	0000H
F0199H								
F019AH	Timer mode register 05	TMR05		R/W	–	–	✓	0000H
F019BH								
F019CH	Timer mode register 06	TMR06		R/W	–	–	✓	0000H
F019DH								
F019EH	Timer mode register 07	TMR07		R/W	–	–	✓	0000H
F019FH								
F01A0H	Timer status register 00	TSR00L	TSR00	R	–	✓	✓	0000H
F01A1H		–			–	–		
F01A2H	Timer status register 01	TSR01L	TSR01	R	–	✓	✓	0000H
F01A3H		–			–	–		
F01A4H	Timer status register 02	TSR02L	TSR02	R	–	✓	✓	0000H
F01A5H		–			–	–		
F01A6H	Timer status register 03	TSR03L	TSR03	R	–	✓	✓	0000H
F01A7H		–			–	–		
F01A8H	Timer status register 04	TSR04L	TSR04	R	–	✓	✓	0000H
F01A9H		–			–	–		
F01AAH	Timer status register 05	TSR05L	TSR05	R	–	✓	✓	0000H
F01ABH		–			–	–		
F01ACH	Timer status register 06	TSR06L	TSR06	R	–	✓	✓	0000H
F01ADH		–			–	–		
F01AEH	Timer status register 07	TSR07L	TSR07	R	–	✓	✓	0000H
F01AFH		–			–	–		

Table 4-6. Extended SFR (2nd SFR) List (5/5)

Address	Special Function Register (SFR) Name	Symbol		R/W	Manipulable Bit Range			After Reset
					1-bit	8-bit	16-bit	
F01B0H	Timer channel enable status register 0	TE0L	TE0	R	✓	✓	✓	0000H
F01B1H		–			–	–		
F01B2H	Timer channel start register 0	TS0L	TS0	R/W	✓	✓	✓	0000H
F01B3H		–			–	–		
F01B4H	Timer channel stop register 0	TT0L	TT0	R/W	✓	✓	✓	0000H
F01B5H		–			–	–		
F01B6H	Timer clock select register 0	TPS0		R/W	–	–	✓	0000H
F01B7H								
F01B8H	Timer output register 0	TO0L	TO0	R/W	–	✓	✓	0000H
F01B9H		–			–	–		
F01BAH	Timer output enable register 0	TOE0L	TOE0	R/W	✓	✓	✓	0000H
F01BBH		–			–	–		
F01BCH	Timer output level register 0	TOL0L	TOL0	R/W	–	✓	✓	0000H
F01BDH		–			–	–		
F01BEH	Timer output mode register 0	TOM0L	TOM0	R/W	–	✓	✓	0000H
F01BFH		–			–	–		
F0200H	DMA SFR address register 2	DSA2		R/W	–	✓	–	00H
F0201H	DMA SFR address register 3	DSA3		R/W	–	✓	–	00H
F0202H	DMA RAM address register 2	DRA2L	DRA2	R/W	–	✓	✓	00H
F0203H		DRA2H		R/W	–	✓		00H
F0204H	DMA RAM address register 3	DRA3L	DRA3	R/W	–	✓	✓	00H
F0205H		DRA3H		R/W	–	✓		00H
F0206H	DMA byte count register 2	DBC2L	DBC2	R/W	–	✓	✓	00H
F0207H		DBC2H		R/W	–	✓		00H
F0208H	DMA byte count register 3	DBC3L	DBC3	R/W	–	✓	✓	00H
F0209H		DBC3H		R/W	–	✓		00H
F020AH	DMA mode control register 2	DMC2		R/W	✓	✓	–	00H
F020BH	DMA mode control register 3	DMC3		R/W	✓	✓	–	00H
F020CH	DMA operation control register 2	DRC2		R/W	✓	✓	–	00H
F020DH	DMA operation control register 3	DRC3		R/W	✓	✓	–	00H
F0230H	IICA control register 00	IICCTL00		R/W	✓	✓	–	00H
F0231H	IICA control register 01	IICCTL01		R/W	✓	✓	–	00H
F0232H	IICA low-level width setting register 0	IICWL0		R/W	–	✓	–	FFH
F0233H	IICA high-level width setting register 0	IICWH0		R/W	–	✓	–	FFH
F0234H	Slave address register 0	SVA0		R/W	–	✓	–	00H
F02F0H	Flash memory CRC control register	CRC0CTL		R/W	✓	✓	–	00H
F02F2H	Flash memory CRC operation result register	PGCRCL		R/W	–	–	✓	0000H
F02FAH	CRC data register	CRCD		R/W	–	–	✓	0000H

Remark For SFRs in the SFR area, see **Table 4-5 SFR List**.

4.3 Instruction Address Addressing

4.3.1 Relative addressing

[Function]

Relative addressing stores in the program counter (PC) the result of adding a displacement value included in the instruction word (signed complement data: –128 to +127 or –32768 to +32767) to the program counter (PC)'s value (the start address of the next instruction), and specifies the program address to be used as the branch destination. Relative addressing is applied only to branch instructions.

Figure 4-14. Outline of Relative Addressing

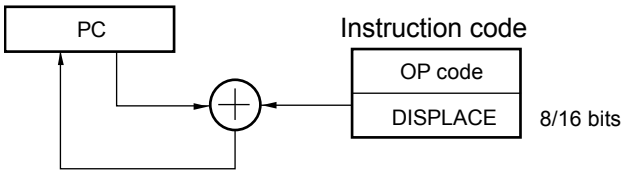

4.3.2 Immediate addressing

[Function]

Immediate addressing stores immediate data of the instruction word in the program counter, and specifies the program address to be used as the branch destination.

For immediate addressing, CALL !!addr20 or BR !!addr20 is used to specify 20-bit addresses and CALL !addr16 or BR !addr16 is used to specify 16-bit addresses. 0000 is set to the higher 4 bits when specifying 16-bit addresses.

Figure 4-15. Example of CALL !!addr20/BR !!addr20

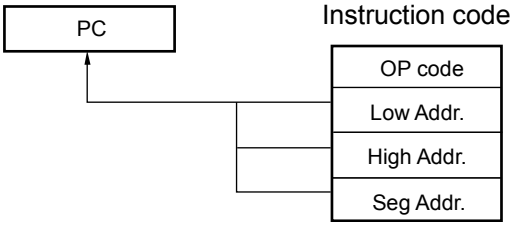

Figure 4-16. Example of CALL !addr16/BR !addr16

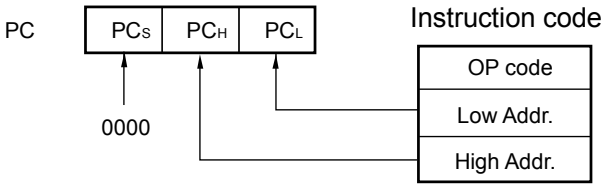

4.3.3 Table indirect addressing

[Function]

Table indirect addressing specifies a table address in the CALLT table area (0080H to 00BFH) with the 5-bit immediate data in the instruction word, stores the contents at that table address and the next address in the program counter (PC) as 16-bit data, and specifies the program address. Table indirect addressing is applied only for CALLT instructions.

In the RL78 microcontrollers, branching is enabled only to the 64 KB space from 00000H to 0FFFFH.

Figure 4-17. Outline of Table Indirect Addressing

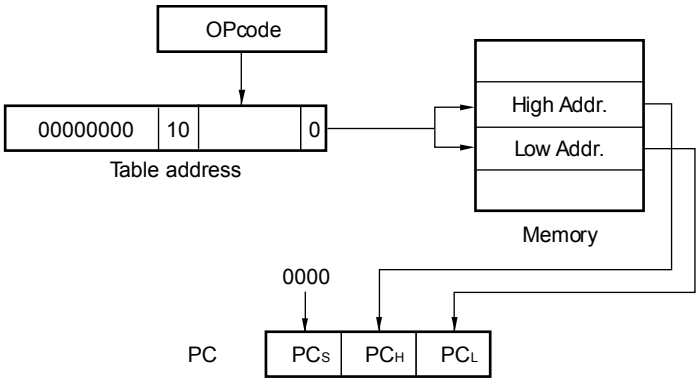

4.3.4 Register direct addressing

[Function]

Register direct addressing stores in the program counter (PC) the contents of a general-purpose register pair (AX/BC/DE/HL) and CS register of the current register bank specified with the instruction word as 20-bit data, and specifies the program address. Register direct addressing can be applied only to the CALL AX, BC, DE, HL, and BR AX instructions.

Figure 4-18. Outline of Register Direct Addressing

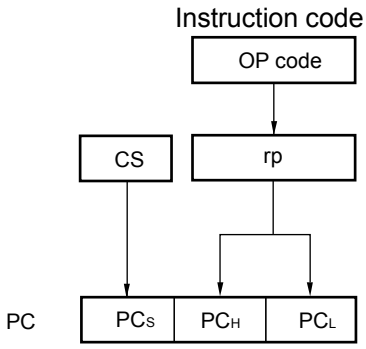

4.4 Addressing for Processing Data Addresses

4.4.1 Implied addressing

[Function]

Instructions for accessing registers (such as accumulators) that have special functions are directly specified with the instruction word, without using any register specification field in the instruction word.

[Operand format]

Implied addressing can be applied only to MULU X.

Figure 4-19. Outline of Implied Addressing

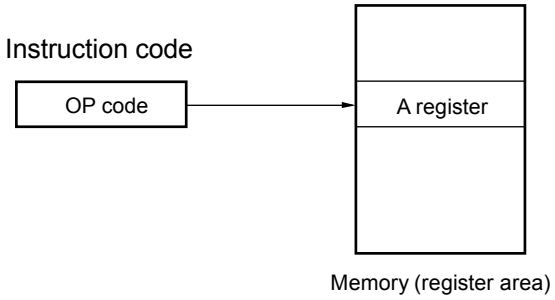

4.4.2 Register addressing

[Function]

Register addressing accesses a general-purpose register as an operand. The instruction word of 3-bit long is used to select an 8-bit register and the instruction word of 2-bit long is used to select a 16-bit register.

[Operand format]

Identifier	Description
r	X, A, C, B, E, D, L, H
rp	AX, BC, DE, HL

Figure 4-20. Outline of Register Addressing

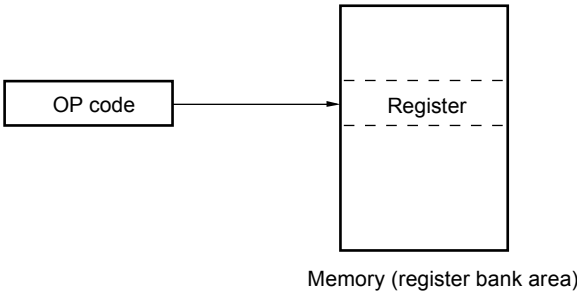

4.4.3 Direct addressing

[Function]

Direct addressing uses immediate data in the instruction word as an operand address to directly specify the target address.

[Operand format]

Identifier	Description
!addr16	Label or 16-bit immediate data (only the space from F0000H to FFFFFH is specifiable)
ES:!addr16	Label or 16-bit immediate data (higher 4-bit addresses are specified by the ES register)

Figure 4-21. Example of !addr16

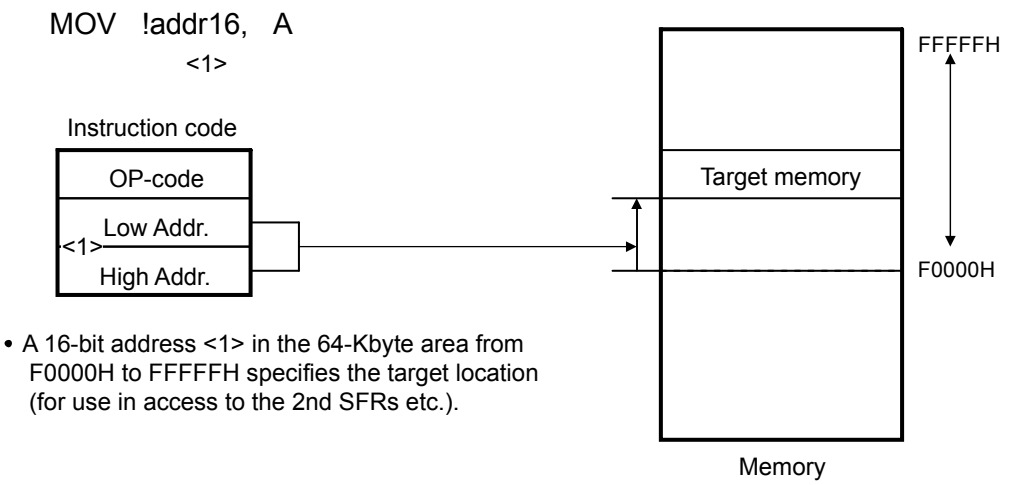

- A 16-bit address <1> in the 64-Kbyte area from F0000H to FFFFFH specifies the target location (for use in access to the 2nd SFRs etc.).

Figure 4-22. Example of ES:!addr16

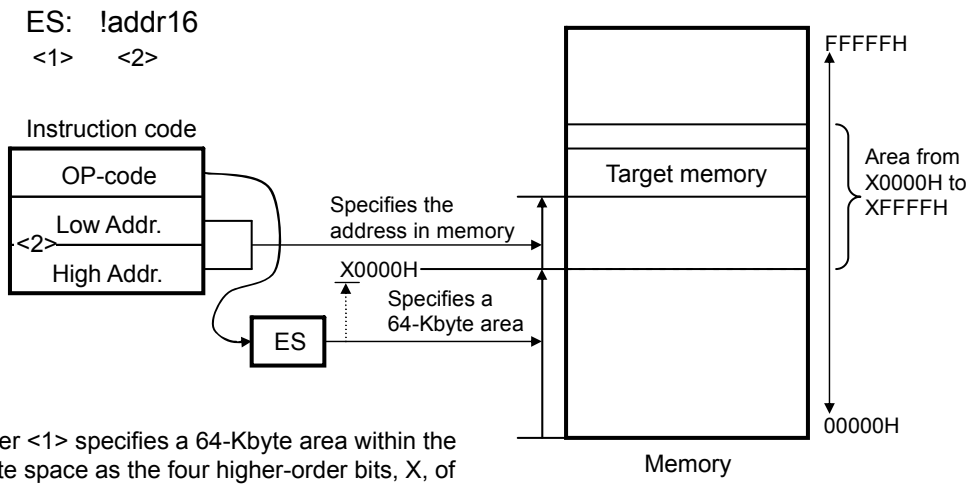

- The ES register <1> specifies a 64-Kbyte area within the overall 1-Mbyte space as the four higher-order bits, X, of the address range.
- A 16-bit address <2> in the area from X0000H to XFFFFH and the ES register <1> specify the target location; this is used for access to fixed data other than that in mirrored areas.

4.4.4 Short direct addressing

[Function]

Short direct addressing directly specifies the target addresses using 8-bit data in the instruction word. This type of addressing is applied only to the space from FFE20H to FFF1FH.

[Operand format]

Identifier	Description
SADDR	Label, FFE20H to FFF1FH immediate data, or 0FE20H to 0FF1FH immediate data (only the space from FFE20H to FFF1FH is specifiable)
SADDRP	Label, FFE20H to FFF1FH immediate data, or 0FE20H to 0FF1FH immediate data (even address only) (only the space from FFE20H to FFF1FH is specifiable)

Figure 4-23. Outline of Short Direct Addressing

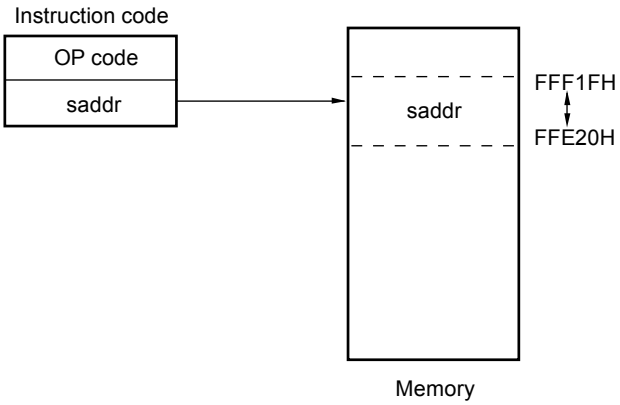

Remark SADDR and SADDRP are used to describe the values of addresses FE20H to FF1FH with 16-bit immediate data (higher 4 bits of actual address are omitted), and the values of addresses FFE20H to FFF1FH with 20-bit immediate data.
Regardless of whether SADDR or SADDRP is used, addresses within the space from FFE20H to FFF1FH are specified for the memory.

4.4.5 SFR addressing

[Function]

SFR addressing directly specifies the target SFR addresses using 8-bit data in the instruction word. This type of addressing is applied only to the space from FFF00H to FFFFFH.

[Operand format]

Identifier	Description
SFR	SFR name
SFRP	16-bit-manipulatable SFR name (even address)

Figure 4-24. Outline of SFR Addressing

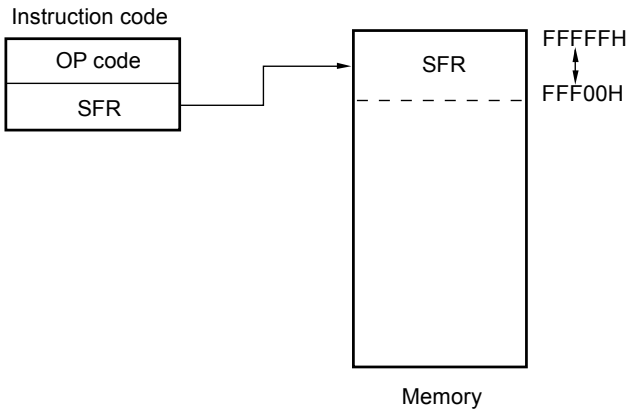

4.4.6 Register indirect addressing

[Function]

Register indirect addressing directly specifies the target addresses using the contents of the register pair specified with the instruction word as an operand address.

[Operand format]

Identifier	Description
–	[DE], [HL] (only the space from F0000H to FFFFFH is specifiable)
–	ES:[DE], ES:[HL] (higher 4-bit addresses are specified by the ES register)

Figure 4-25. Example of [DE], [HL]

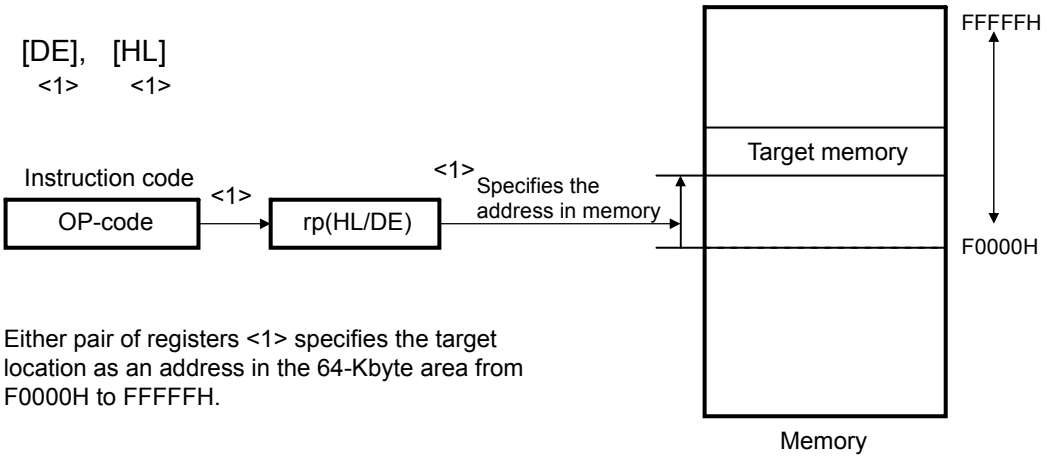

- Either pair of registers <1> specifies the target location as an address in the 64-Kbyte area from F0000H to FFFFFH.

Figure 4-26. Example of ES:[DE], ES:[HL]

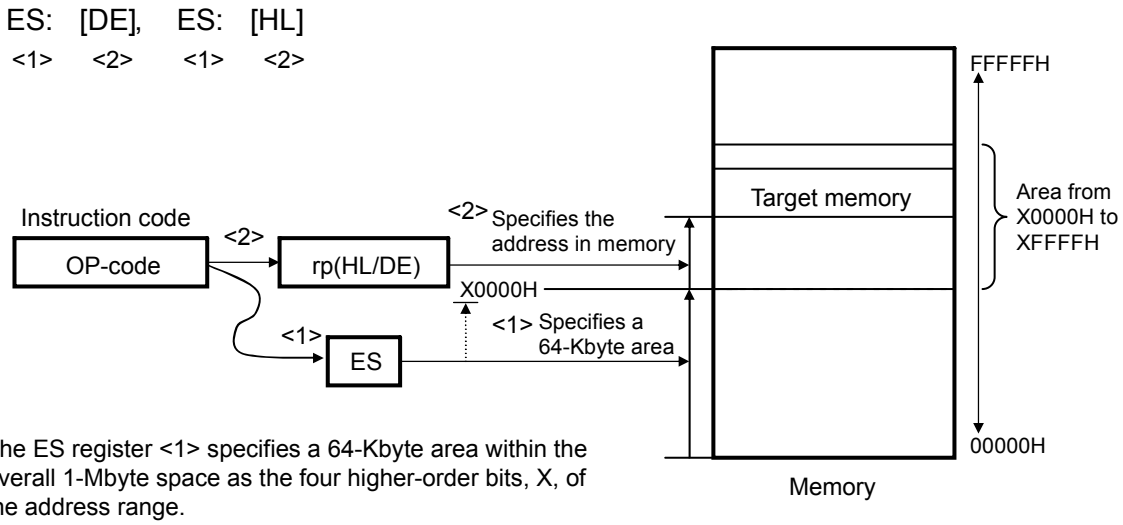

- The ES register <1> specifies a 64-Kbyte area within the overall 1-Mbyte space as the four higher-order bits, X, of the address range.
- Either pair of registers <2> and the ES register <1> specify the target location in the area from X0000H to XFFFFH.

4.4.7 Based addressing

[Function]

Based addressing uses the contents of a register pair specified with the instruction word or 16-bit immediate data as a base address, and 8-bit immediate data or 16-bit immediate data as offset data. The sum of these values is used to specify the target address.

[Operand format]

Identifier	Description
–	[HL + byte], [DE + byte], [SP + byte] (only the space from F0000H to FFFFFH is specifiable)
–	word[B], word[C] (only the space from F0000H to FFFFFH is specifiable)
–	word[BC] (only the space from F0000H to FFFFFH is specifiable)
–	ES:[HL + byte], ES:[DE + byte] (higher 4-bit addresses are specified by the ES register)
–	ES:word[B], ES:word[C] (higher 4-bit addresses are specified by the ES register)
–	ES:word[BC] (higher 4-bit addresses are specified by the ES register)

Figure 4-27. Example of [SP+byte]

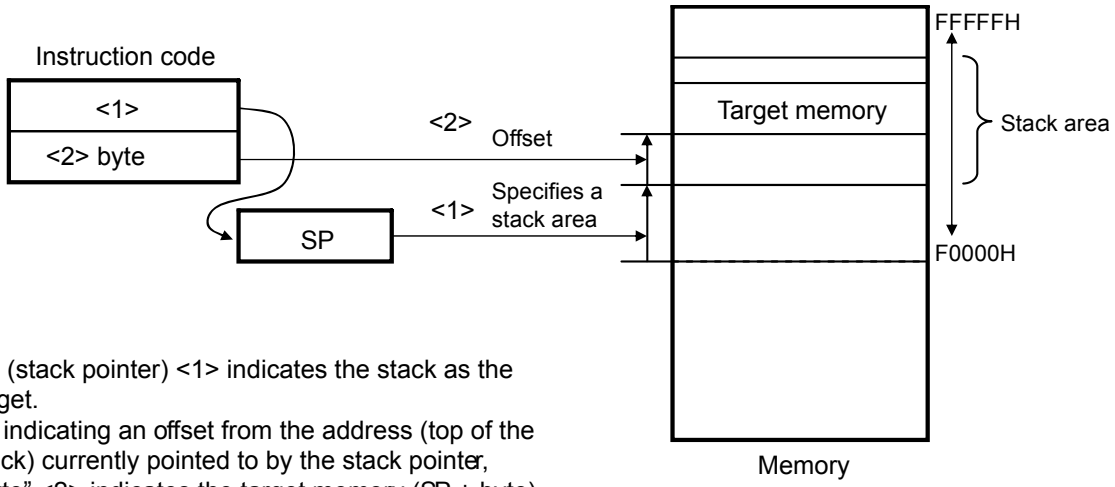

- SP (stack pointer) <1> indicates the stack as the target.
- By indicating an offset from the address (top of the stack) currently pointed to by the stack pointer, “byte” <2> indicates the target memory (SP + byte).

Figure 4-28. Example of [HL + byte], [DE + byte]

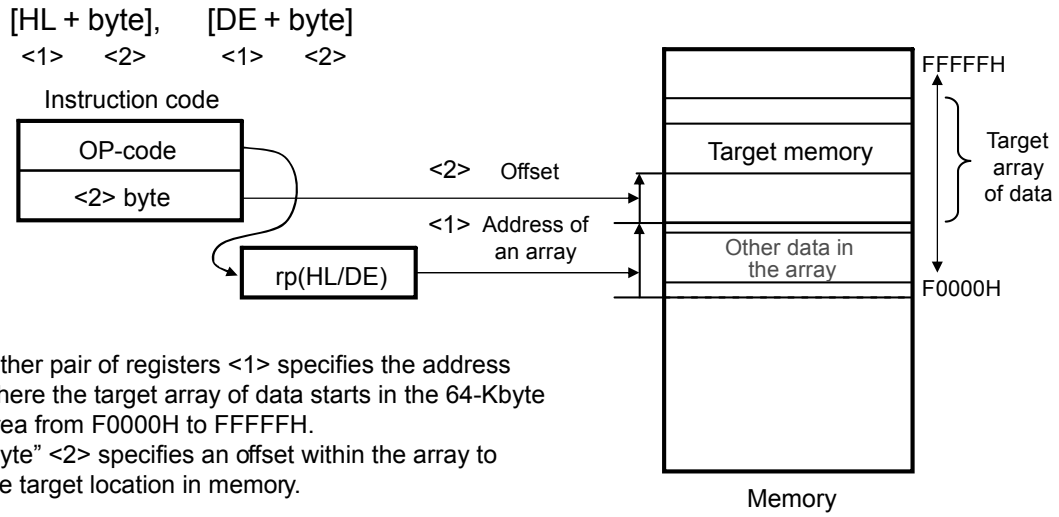

- Either pair of registers <1> specifies the address where the target array of data starts in the 64-Kbyte area from F0000H to FFFFFH.
- "byte" <2> specifies an offset within the array to the target location in memory.

Figure 4-29. Example of word[B], word[C]

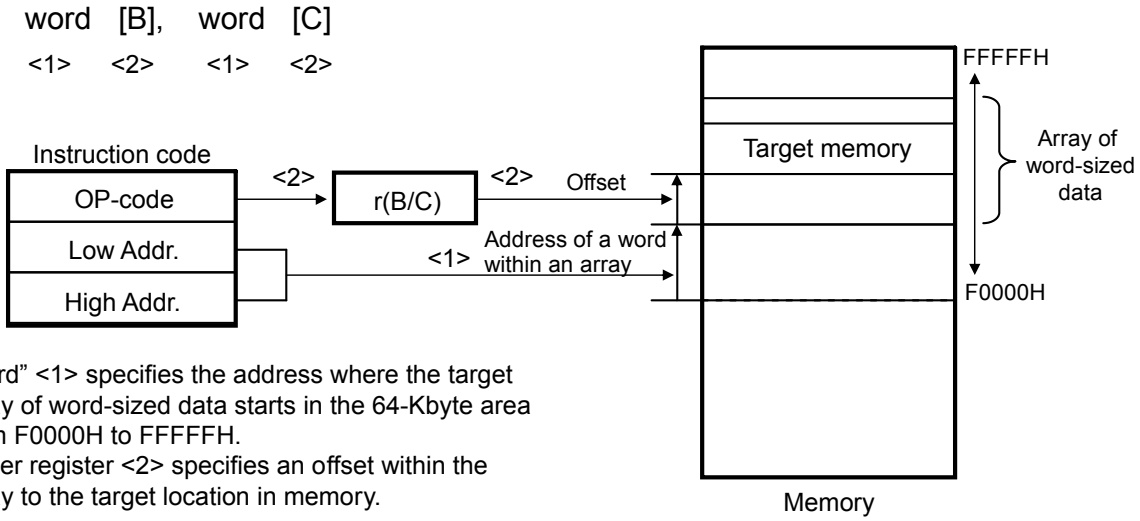

- "word" <1> specifies the address where the target array of word-sized data starts in the 64-Kbyte area from F0000H to FFFFFH.
- Either register <2> specifies an offset within the array to the target location in memory.

Figure 4-30. Example of word[BC]

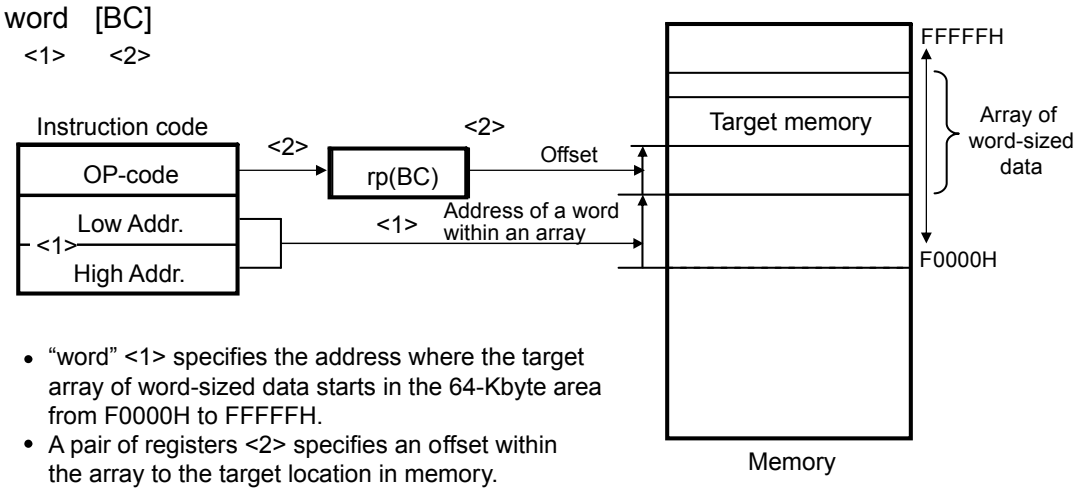

- "word" <1> specifies the address where the target array of word-sized data starts in the 64-Kbyte area from F0000H to FFFFFH.
- A pair of registers <2> specifies an offset within the array to the target location in memory.

Figure 4-31. Example of ES:[HL + byte], ES:[DE + byte]

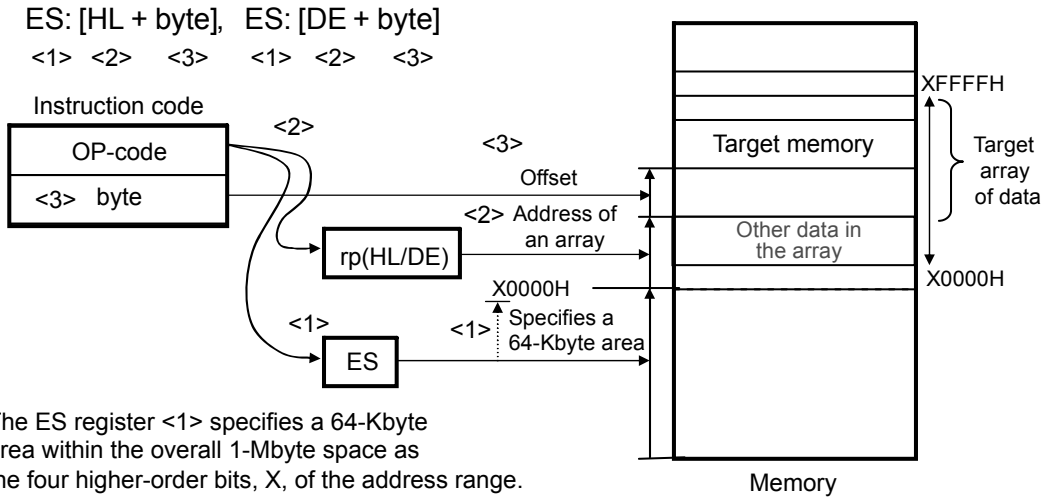

- The ES register <1> specifies a 64-Kbyte area within the overall 1-Mbyte space as the four higher-order bits, X, of the address range.
- Either pair of registers <2> specifies the address where the target array of data starts in the 64-Kbyte area specified in the ES register <1>.
- "byte" <3> specifies an offset within the array to the target location in memory.

Figure 4-32. Example of ES:word[B], ES:word[C]

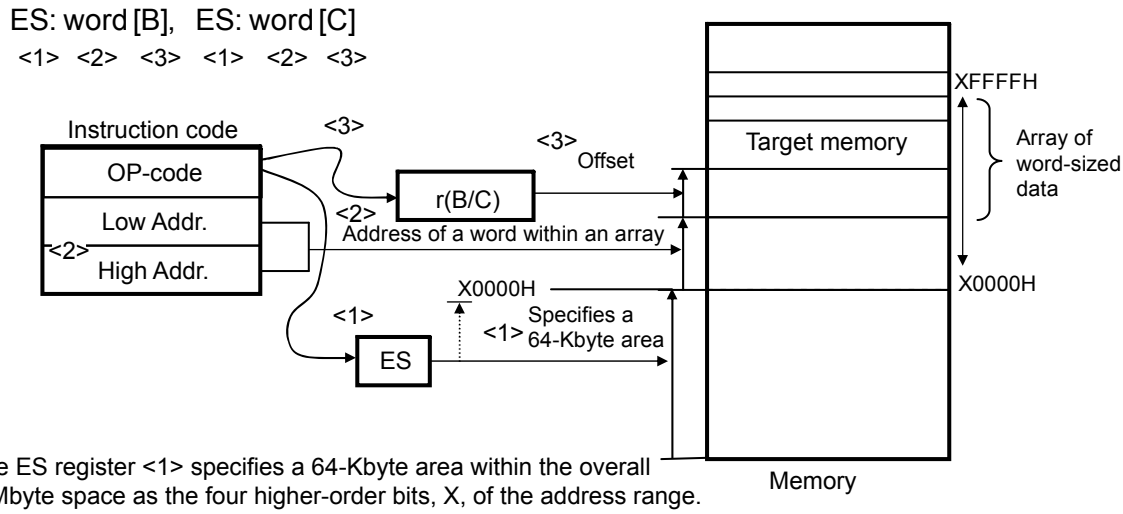

- The ES register <1> specifies a 64-Kbyte area within the overall 1-Mbyte space as the four higher-order bits, X, of the address range.
- "word" <2> specifies the address where the target array of word-sizeddata starts in the 64-Kbyte area specified in the ES register <1>.
- Either register <3> specifies an offset within the array tothe target location in memory.

Figure 4-33. Example of ES:word[BC]

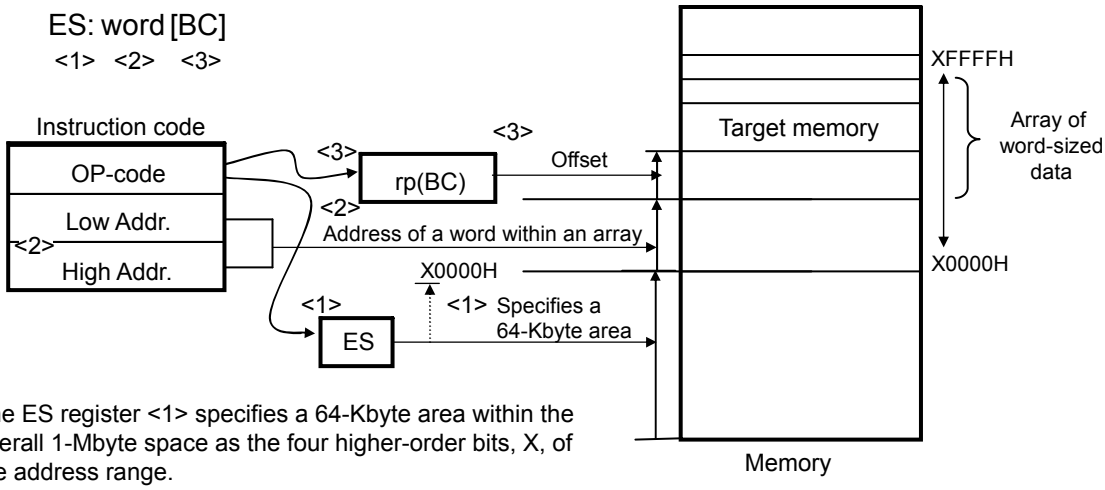

- The ES register <1> specifies a 64-Kbyte area within the overall 1-Mbyte space as the four higher-order bits, X, of the address range.
- "word" <2> specifies the address where the target array of word-sized data starts in the 64-Kbyte area specified in the ES register <1>.
- A pair of registers <3> specifies an offset within the array to the target location in memory.

4.4.8 Based indexed addressing

[Function]

Based indexed addressing uses the contents of a register pair specified with the instruction word as the base address, and the content of the B register or C register similarly specified with the instruction word as offset address. The sum of these values is used to specify the target address.

[Operand format]

Identifier	Description
–	[HL+B], [HL+C] (only the space from F0000H to FFFFFH is specifiable)
–	ES:[HL+B], ES:[HL+C] (higher 4-bit addresses are specified by the ES register)

Figure 4-34. Example of [HL+B], [HL+C]

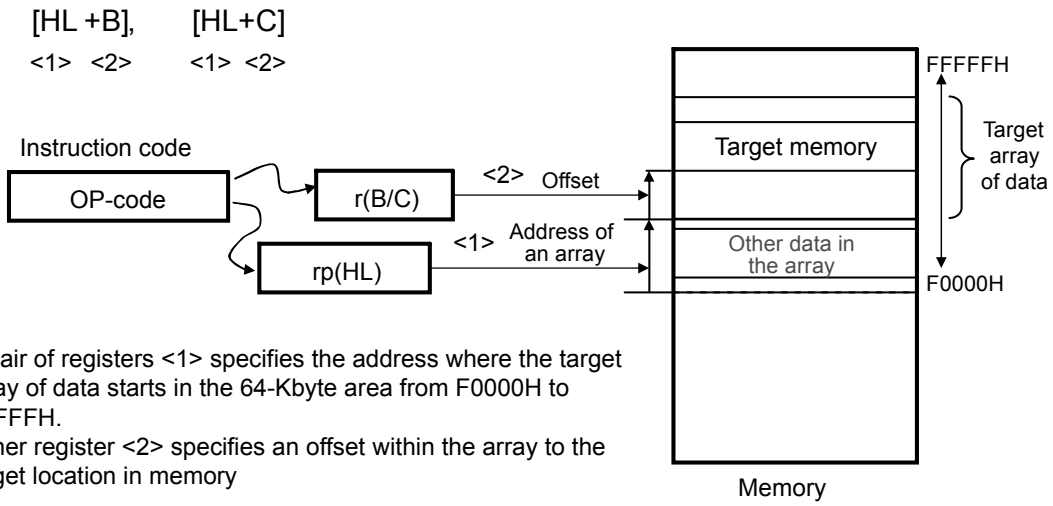

- A pair of registers <1> specifies the address where the target array of data starts in the 64-Kbyte area from F0000H to FFFFFH.
- Either register <2> specifies an offset within the array to the target location in memory

Figure 4-35. Example of ES:[HL+B], ES:[HL+C]

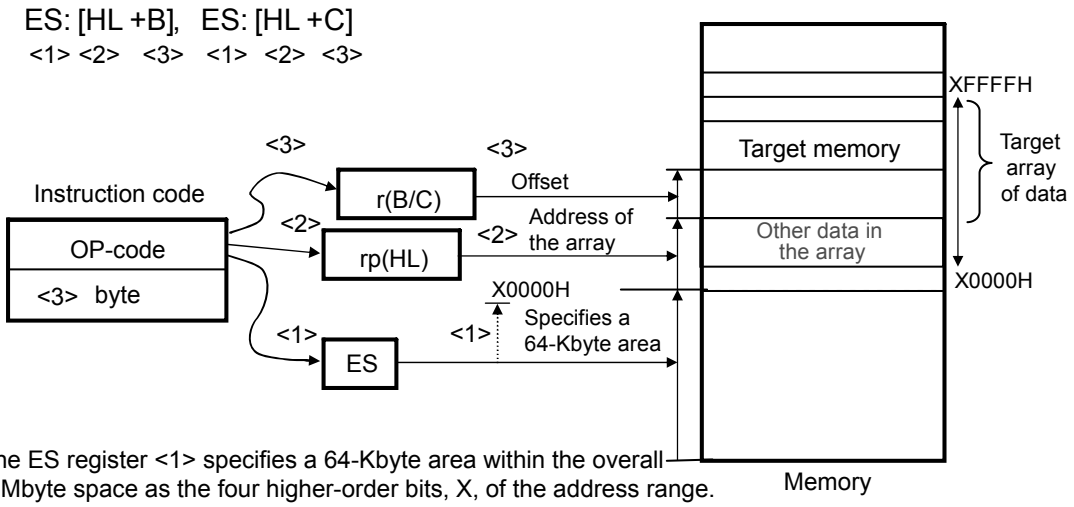

- The ES register <1> specifies a 64-Kbyte area within the overall 1-Mbyte space as the four higher-order bits, X, of the address range.
- A pair of registers <2> specifies the address where the target array of data starts in the 64-Kbyte area specified in the ES register <1>.
- Either register <3> specifies an offset within the array to the target location in memory.

4.4.9 Stack addressing

[Function]

The stack area is indirectly addressed with the stack pointer (SP) values. This addressing is automatically employed when the PUSH, POP, subroutine call, and return instructions are executed or the register is saved/restored upon generation of an interrupt request.

Only the internal RAM area can be set as the stack area.

[Description format]

Identifier	Description
–	PUSH PSW AX/BC/DE/HL POP PSW AX/BC/DE/HL CALL/CALLT RET BRK RETB (Interrupt request generated) RETI

Each stack operation saves or restores data as shown in **Figures 4-36** to **4-41**.

Figure 4-36. Example of PUSH rp

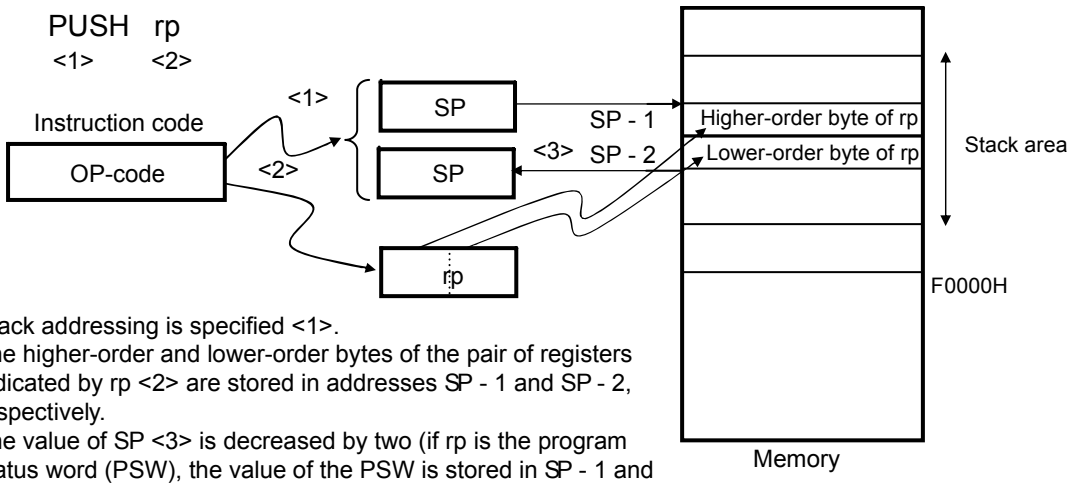

- Stack addressing is specified <1>.
- The higher-order and lower-order bytes of the pair of registers indicated by rp <2> are stored in addresses SP - 1 and SP - 2, respectively.
- The value of SP <3> is decreased by two (if rp is the program status word (PSW), the value of the PSW is stored in SP - 1 and 0 is stored in SP - 2).

Figure 4-37. Example of POP

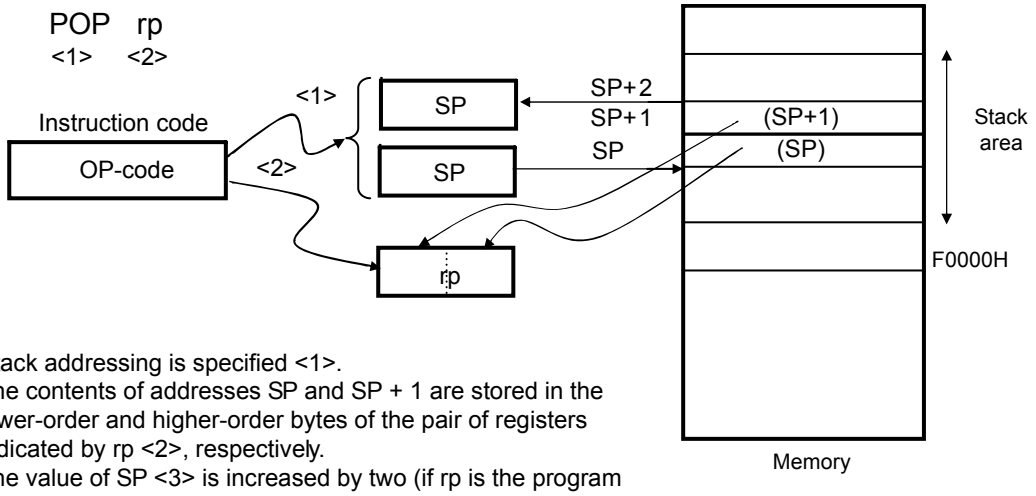

- Stack addressing is specified <1>.
- The contents of addresses SP and SP + 1 are stored in the lower-order and higher-order bytes of the pair of registers indicated by rp <2>, respectively.
- The value of SP <3> is increased by two (if rp is the program status word (PSW), the content of address SP + 1 is stored in the PSW).

Figure 4-38. Example of CALL, CALLT

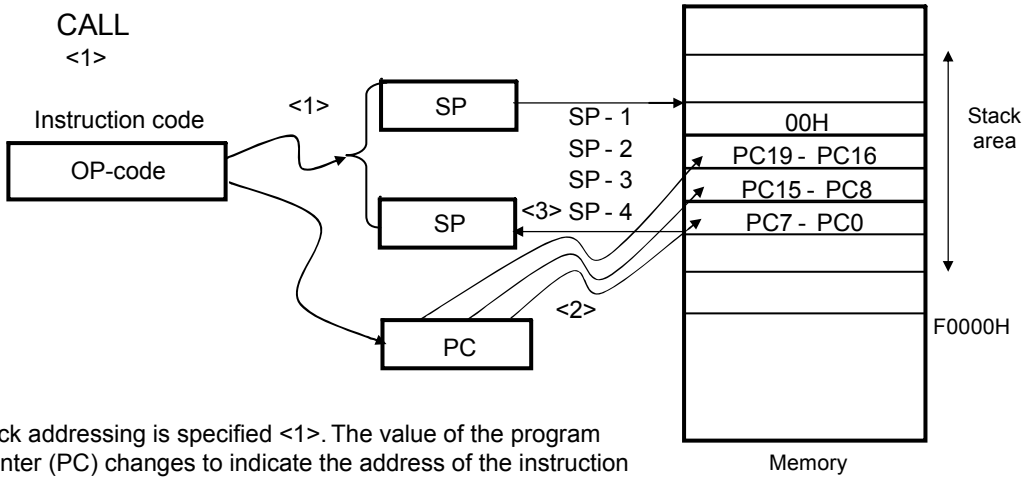

- Stack addressing is specified <1>. The value of the program counter (PC) changes to indicate the address of the instruction following the CALL instruction.
- 00H, the values of PC bits 19 to 16, 15 to 8, and 7 to 0 are stored in addresses SP - 1, SP - 2, SP - 3, and SP - 4, respectively <2>.
- The value of the SP <3> is decreased by 4.

Figure 4-39. Example of RET

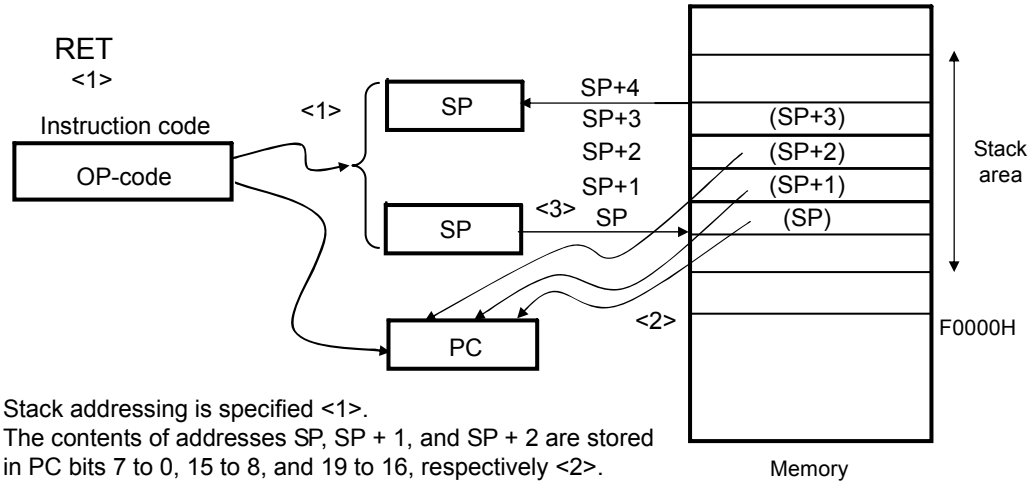

- Stack addressing is specified <1>.
- The contents of addresses SP, SP + 1, and SP + 2 are stored in PC bits 7 to 0, 15 to 8, and 19 to 16, respectively <2>.
- The value of SP <3> is increased by four.

Figure 4-40. Example of Interrupt, BRK

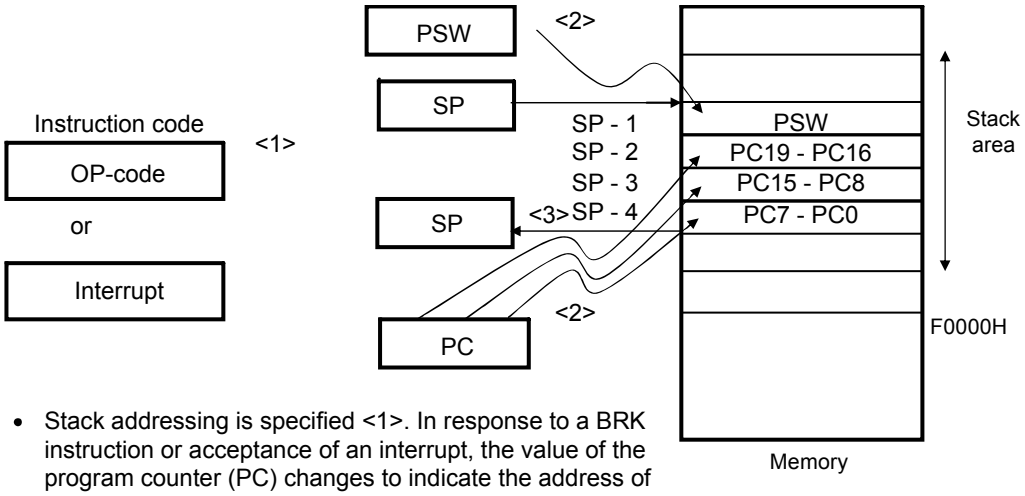

- Stack addressing is specified <1>. In response to a BRK instruction or acceptance of an interrupt, the value of the program counter (PC) changes to indicate the address of the next instruction.
- The values of the PSW, PC bits 19 to 16, 15 to 8, and 7 to 0 are stored in addresses SP - 1, SP - 2, SP - 3, and SP - 4, respectively <2>.
- The value of the SP <3> is decreased by 4.

Figure 4-41. Example of RETI, RETB

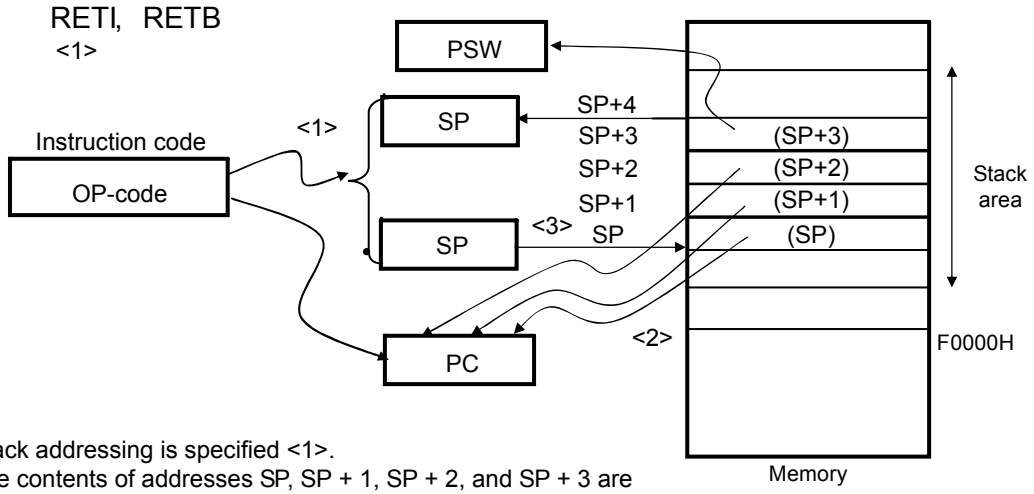

- Stack addressing is specified <1>.
- The contents of addresses SP, SP + 1, SP + 2, and SP + 3 are stored in PC bits 7 to 0, 15 to 8, 19 to 16, and the PSW, respectively <2>.
- The value of SP <3> is increased by four.

CHAPTER 5 PORT FUNCTIONS

5.1 Port Functions

The RL78/G1D microcontrollers are provided with digital I/O ports, which enable variety of control operations.

In addition to the function as digital I/O ports, these ports have several alternate functions. For details of the alternate functions, see **CHAPTER 3 PIN FUNCTIONS**.

5.2 Port Configuration

Ports include the following hardware.

Table 5-1. Port Configuration

Item	Configuration
Control registers	Port mode registers (PM0 to PM7, PM12, PM14) Port registers (P0 to P7, P12 to P14) Pull-up resistor option registers (PU0, PU1, PU3, PU4, PU12, PU14) Port input mode registers (PIM0, PIM1) Port output mode registers (POM0, POM1) Port mode control registers (PMC0, PMC12, and PMC14) A/D port configuration register (ADPC) Peripheral I/O redirection register (PIOR) Global digital input disable register (GDIDIS)
Port	Total: 32 (CMOS I/O: 26, CMOS input: 5, CMOS output: 1)
Pull-up resistor	Total: 16

Caution This chapter describes the case where the peripheral I/O redirection register (PIOR) is set to 00H.

5.2.1 Port 0

Port 0 is an I/O port with an output latch. Port 0 can be set to input mode or output mode in 1-bit units using the port mode register 0 (PM0). When the P00 to P03 pins are used as an input port, use of an on-chip pull-up resistor can be specified in 1-bit units by the pull-up resistor option register 0 (PU0).

Input to the P01 and P03 pins can be specified through a normal input buffer or a TTL input buffer in 1-bit units using the port input mode register 0 (PIM0).

Output from the P00, P02, and P03 pins can be specified as N-ch open-drain output (V_{DD} tolerance) in 1-bit units using port output mode register 0 (POM0).

To use the P02 and P03 as digital input/output pins, specify them in the digital I/O mode by using the port mode control register 0 (PMC0) (specifiable in 1-bit units).

This port can also be used for A/D converter analog input, serial interface data I/O, clock I/O, and timer I/O.

When reset signal is generated, the following configuration will be set.

The P05 and P06 pins are internally connected between the MCU and RF section of the RL78/G1D.

Refer to **CHAPTER 2 CONNECTION BETWEEN MCU AND RF TRANSCEIVER**.

5.2.2 Port 1

Port 1 is an I/O port with an output latch. Port 1 can be set to input mode or output mode in 1-bit units using the port mode register 1 (PM1). When the P10 to P16 pins are used as an input port, use of an on-chip pull-up resistor can be specified in 1-bit units by the pull-up resistor option register 1 (PU1).

Input to the P10, P11, and P13 to P16 pins can be specified through a normal input buffer or a TTL input buffer in 1-bit units using the port input mode register 1 (PIM1).

Output from the P10 to P15 pins can be specified as N-ch open-drain output (V_{DD} tolerance) in 1-bit units using the port output mode register 1 (POM1).

This port can also be used for serial interface data I/O, clock I/O, programming UART I/O, timer I/O, and external interrupt request input.

Reset signal generation sets port 1 to input mode.

5.2.3 Port 2

Port 2 is an I/O port with an output latch. Port 2 can be set to input mode or output mode in 1-bit units using the port mode register 2 (PM2).

This port can also be used for A/D converter analog input and reference voltage input (+ side and - side).

To use P20/ANI0 to P23/ANI3 as digital input/output pins, set them to digital I/O mode by using the A/D port configuration register (ADPC). Use these pins starting from the upper bit.

To use P20/ANI0 to P23/ANI3 as analog input pins, set them to analog input mode by using the A/D port configuration register (ADPC) and in the input mode by using the PM2 register. Use these pins starting from the lower bit.

Table 5-2. Setting Functions of P20/ANI0 to P23/ANI3 Pins

ADPC Register	PM2 Register	ADS Register	P20/ANI0 to P23/ANI3 Pins
Digital I/O selection	Input mode	–	Digital input
	Output mode	–	Digital output
Analog input selection	Input mode	Selects ANI.	Analog input (to be converted)
		Does not select ANI.	Analog input (not to be converted)
	Output mode	Selects ANI.	Setting prohibited
		Does not select ANI.	

Both P20/ANI0 to P23/ANI3 are set to analog input mode when the reset signal is generated.

5.2.4 Port 3

Port 3 is an I/O port with an output latch. Port 3 can be set to input mode or output mode in 1-bit units using the port mode register 3 (PM3). When the P30 pin is used as an input port, use of an on-chip pull-up resistor can be specified in 1-bit units by the pull-up resistor option register 3 (PU3).

This port can also be used for external interrupt request input and real-time clock correction clock output.

Reset signal generation sets P30 to input mode.

5.2.5 Port 4

Port 4 is an I/O port with an output latch. Port 4 can be set to input mode or output mode in 1-bit units using the port mode register 4 (PM4). When the P40 pin is used as an input port, use of an on-chip pull-up resistor can be specified in 1-bit units by the pull-up resistor option register 4 (PU4).

This port can also be used for data I/O for a flash memory programmer/debugger.

Reset signal generation sets port 4 to input mode.

5.2.6 Port 6

Port 6 is an I/O port with an output latch. Port 6 can be set to the input mode or output mode in 1-bit units using port mode register 6 (PM6). specified in 1-bit units by pull-up resistor option register 6 (PU6).

The output of the P60, P61 pins is N-ch open-drain output (6-V tolerance).

This port can also be used for serial interface data I/O, and clock I/O.

Reset signal generation sets port 6 to input mode.

5.2.7 Port 7

Port 7 is an I/O port with an output latch. Port 7 can be set to the input mode or output mode in 1-bit units using port mode register 7 (PM7).

The P70 to P72 and P74 to P77 pins are internally connected between the MCU and RF section of the RL78/G1D. P70 to P72 pins are used for the data I/O for serial interface, which is an alternate function.

Refer to **CHAPTER 2 CONNECTION BETWEEN MCU AND RF TRANSCEIVER**.

5.2.8 Port 12

P120 is an I/O port with an output latch. P120 can be set to the input mode or output mode in 1-bit units using port mode register 12 (PM12).

P121 to P124 are 4-bit input only ports.

The P120 pin can be specified as digital input/output or analog input by using port mode control register 12 (PMC12).

This port can also be used for A/D converter analog input, connecting resonator for main system clock, connecting resonator for subsystem clock, and external clock input for subsystem clock.

Reset signal generation sets P120 to analog input, and sets P121 to P124 to input mode.

5.2.9 Port 13

P130 is a 1-bit output-only port with an output latch. P137 is a 1-bit input-only port.

P130 is fixed an output port, and P137 is fixed an input ports.

This port can also be used for external interrupt request input.

Remark When reset is effected, P130 outputs a low level. If P130 is set to output a high level before reset is effected, the output signal of P130 can be dummy-output as the CPU reset signal.

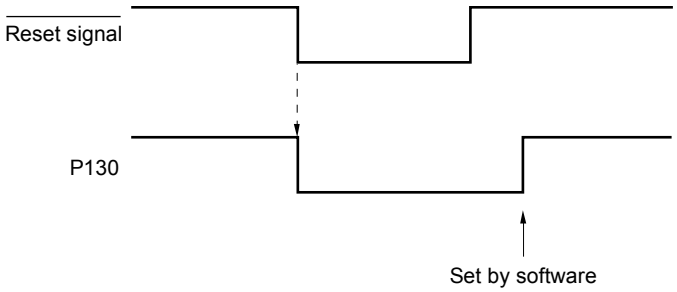

5.2.10 Port 14

Port 14 is an I/O port with an output latch. Port 14 can be set to the input mode or output mode in 1-bit units using port mode register 14 (PM14). When the P140 and P147 pins are used as input ports, use of an on-chip pull-up resistor can be specified in 1-bit units by pull-up resistor option register 14 (PU14).

The P140 pin can be specified as digital input/output or analog input by using port mode control register 14 (PMC14).

This port can also be used for clock/buzzer output, external interrupt request input, and A/D converter analog input.

Reset signal generation sets P140 to input mode, and sets P147 to analog input.

5.2.11 GPIO port

GPIO port is an I/O port with an output latch. For GPIO port, the mode setting and I/O can be specified via API of Renesas Bluetooth Low Energy protocol stack.

This port can also be used for external PA/LNA control output, clock output for RF block, and RF external clock I/O.

5.3 Registers Controlling Port Function

Port functions are controlled by the following registers.

- Port mode registers (PMxx)
- Port registers (Pxx)
- Pull-up resistor option registers (PUxx)
- Port input mode registers (PIMxx)
- Port output mode registers (POMxx)
- Port mode control registers (PMCxx)
- A/D port configuration register (ADPC)
- Peripheral I/O redirection register (PIOR)
- Global digital input disable register (GDIDIS)

Caution The undefined bits in each register vary by product and must be used with their initial value.

Table 5-3. PMxx, Pxx, PUxx, PIMxx, POMxx, PMCxx registers and the bits (2/1)

Port		Bit name					
		PMxx register	Pxx register	PUxx register	PIMxx register	POMxx register	PMCxx register
Port 0	0	PM00	P00	PU00	–	POM00	–
	1	PM01	P01	PU01	PIM01	–	–
	2	PM02	P02	PU02	–	POM02	PMC02
	3	PM03	P03	PU03	PIM03	POM03	PMC03
	4	PM04 Note	P04 Note	–	–	–	–
	5	PM05 Note	P05 Note	–	–	–	–
	6	PM06 Note	P06 Note	–	–	–	–
Port 1	0	PM10	P10	PU10	PIM10	POM10	–
	1	PM11	P11	PU11	PIM11	POM11	–
	2	PM12	P12	PU12	–	POM12	–
	3	PM13	P13	PU13	PIM13	POM13	–
	4	PM14	P14	PU14	PIM14	POM14	–
	5	PM15	P15	PU15	PIM15	POM15	–
	6	PM16	P16	PU16	PIM16	–	–
	7	PM17 Note	P17 Note	–	–	–	–
Port 2	0	PM20	P20	–	–	–	–
	1	PM21	P21	–	–	–	–
	2	PM22	P22	–	–	–	–
	3	PM23	P23	–	–	–	–
Port 3	0	PM30	P30	PU30	–	–	–
	1	PM31 Note	P31 Note	–	–	–	–
Port 4	0	PM40	P40	PU40	–	–	–
	1	PM41 Note	P41 Note	–	–	–	–
	2	PM42 Note	P42 Note	–	–	–	–
	3	PM43 Note	P43 Note	–	–	–	–
Port 5	0	PM50 Note	P50 Note	–	–	–	–
	1	PM51 Note	P51 Note	–	–	–	–
	2	PM52 Note	P52 Note	–	–	–	–
	3	PM53 Note	P53 Note	–	–	–	–
	4	PM54 Note	P54 Note	–	–	–	–
	5	PM55 Note	P55 Note	–	–	–	–
Port 6	0	PM60	P60	–	–	–	–
	1	PM61	P61	–	–	–	–
	2	PM62 Note	P62 Note	–	–	–	–
	3	PM63 Note	P63 Note	–	–	–	–

Table 5-3. PMxx, Pxx, PUxx, PIMxx, POMxx, PMCxx registers and the bits (2/2)

Port		Bit name					
		PMxx register	Pxx register	PUxx register	PIMxx register	POMxx register	PMCxx register
Port 7	0	PM70[Note]	P70[Note]	–	–	–	–
	1	PM71[Note]	P71[Note]	–	–	–	–
	2	PM72[Note]	P72[Note]	–	–	–	–
	3	PM73[Note]	P73[Note]	–	–	–	–
	4	PM74[Note]	P74[Note]	–	–	–	–
	5	PM75[Note]	P75[Note]	–	–	–	–
	6	PM76[Note]	P76[Note]	–	–	–	–
	7	PM77[Note]	P77[Note]	–	–	–	–
Port 12	0	PM120	P120	PU120	–	–	PMC120
	1	–	P121	–	–	–	–
	2	–	P122	–	–	–	–
	3	–	P123	–	–	–	–
	4	–	P124	–	–	–	–
Port 13	0	–	P130	–	–	–	–
	7	–	P137	–	–	–	–
Port 14	0	PM140	P140	PU140	–	–	–
	1	PM141[Note]	P141[Note]	–	–	–	–
	6	PM146[Note]	P146[Note]	–	–	–	–
	7	PM147	P147	PU147	–	–	–

Note For controlling internal pins. For details, see CHAPTER 2.

The format for each register is described below.

5.3.1 Port mode registers (PMxx)

These registers specify input or output mode for the port in 1-bit units.

These registers can be set by a 1-bit or 8-bit memory manipulation instruction.

Reset signal generation sets these registers to FFH.

When port pins are used as alternate-function pins, set the port mode register by referencing **5.5 Settings of Port Related Register When Using Alternate Function**.

Figure 5-1. Format of Port Mode Registers (1/2)

Address: FFF20H After reset: FFH R/W

Symbol	7	6	5	4	3	2	1	0
PM0	1	PM06 Note 3	PM05 Note 3	PM04 Note 2	PM03	PM02	PM01	PM00

Address: FFF21H After reset: FFH R/W

Symbol	7	6	5	4	3	2	1	0
PM1	PM17 Note 2	PM16	PM15	PM14	PM13	PM12	PM11	PM10

Address: FFF22H After reset: FFH R/W

Symbol	7	6	5	4	3	2	1	0
PM2	1	1	1	1	PM23	PM22	PM21	PM20

Address: FFF23H After reset: FFH R/W

Symbol	7	6	5	4	3	2	1	0
PM3	1	1	1	1	1	1	PM31 Note 2	PM30

Address: FFF24H After reset: FFH R/W

Symbol	7	6	5	4	3	2	1	0
PM4	1	1	1	1	PM43 Note 2	PM42 Note 2	PM41 Note 2	PM40

Address: FFF25H After reset: FFH R/W

Symbol	7	6	5	4	3	2	1	0
PM5	1	1	PM55 Note 2	PM54 Note 2	PM53 Note 2	PM52 Note 2	PM51 Note 2	PM50 Note 2

Address: FFF26H After reset: FFH R/W

Symbol	7	6	5	4	3	2	1	0
PM6	1	1	1	1	PM63 Note 2	PM62 Note 2	PM61	PM60

Address: FFF27H After reset: FFH R/W

Symbol	7	6	5	4	3	2	1	0
PM7	PM77 Note 4	PM76 Note 3	PM75 Note 3	PM74 Note 3	PM73 Note 2	PM72 Note 3	PM71 Note 4	PM70 Note 3

Figure 5-1. Format of Port Mode Registers (2/2)

Address: FFF2CH After reset: FFH R/W

Symbol	7	6	5	4	3	2	1	0
PM12[Note 1]	1	1	1	1	1	1	1	PM120

Address: FFF2EH After reset: FFH R/W

Symbol	7	6	5	4	3	2	1	0
PM14	PM147	PM146[Note 2]	1	1	1	1	PM141[Note 2]	PM140

PMmn	Pmn pin I/O mode selection (m = 0 to 7, 12, 14; n = 0 to 7)
0	Output mode (output buffer on)
1	Input mode (output buffer off)

Notes 1. Be sure to set bits 4 and 7 of the PM0 register, bits 4 to 7 of the PM2 register, bits 2 to 7 of the PM3 register, bits 4 to 7 of the PM4 register, bits 6 and 7 of the PM5 register, bits 4 to 7 of the PM6 register, bit 3 of the PM7 register, bits 1 to 7 of the PM12 register, and bits 2 to 5 of the PM14 register to “1”.

2. These internal pins must be set to output mode after reset release by software by setting 0 to the port register and port mode register.

3. These internal connecting pins must be set to output mode after reset release by software by setting 0 to the port mode register.

4. These internal connecting pins must be set to input mode after reset release by software by setting 1 to the port mode register.

Caution Be sure to set bits that are not mounted to their initial values.

5.3.2 Port registers (Pxx)

These registers set the output latch value of a port.

If the data is read in the input mode, the pin level is read. If it is read in the output mode, the output latch value is read[Note].

These registers can be set by a 1-bit or 8-bit memory manipulation instruction.

Reset signal generation clears these registers to 00H.

Note If P02, P03, P20 to P23, P120, and P147 are set up as analog inputs of the A/D converter, when a port is read while in the input mode, 0 is always returned, not the pin level.

Figure 5-2. Format of Port Register

Symbol	7	6	5	4	3	2	1	0	Address	After reset	R/W
P0	0	P06 Note 4	P05 Note 4	P04 Note 3	P03	P02	P01	P00	FFF00H	00H (output latch)	R/W
P1	P17 Note 3	P16	P15	P14	P13	P12	P11	P10	FFF01H	00H (output latch)	R/W
P2	0	0	0	0	P23	P22	P21	P20	FFF02H	00H (output latch)	R/W
P3	0	0	0	0	0	0	P31 Note 3	P30	FFF03H	00H (output latch)	R/W
P4	0	0	0	0	P43 Note 3	P42 Note 3	P41 Note 3	P40	FFF04H	00H (output latch)	R/W
P5	0	0	P55 Note 3	P54 Note 3	P53 Note 3	P52 Note 3	P51 Note 3	P50 Note 3	FFF05H	00H (output latch)	R/W
P6	0	0	0	0	P63 Note 3	P62 Note 3	0	0	FFF06H	00H (output latch)	R/W
P7	P77 Note 4	P76 Note 4	P75 Note 4	P74 Note 4	P73 Note 3	P72 Note 4	P71 Note 4	P70 Note 4	FFF07H	00H (output latch)	R/W
P12	0	0	0	P124	P123	P122	P121	P120	FFF0CH	Undefined	R/W Note 1
P13	P137	0	0	0	0	0	0	P130	FFF0DH	**Note 2**	R/W Note 1
P14	P147	P146 Note 3	0	0	0	0	P141 Note 3	P140	FFF0EH	00H (output latch)	R/W

Pmn	Output data control (in output mode)	Input data read (in input mode)
0	Output 0	Input low level
1	Output 1	Input high level

Notes 1. P121 to P124, and P137 are read-only.

2. P137 : Undefined
P130: 0 (output latch)

3. These internal pins must be set to output mode after reset release by software by setting 0 to the port register and port mode register.

4. Bit for internal connected pin. For details, see CHAPTER 2.

Caution Be sure to set bits that are not mounted to their initial values.

Remark m = 0 to 7, 12 to 14; n = 0 to 7

5.3.3 Pull-up resistor option registers (PUxx)

These registers specify whether the on-chip pull-up resistors are to be used or not. On-chip pull-up resistors can be used in 1-bit units only for the bits set to both normal output mode (POMmn = 0) and input mode (PMmn = 1) for the pins to which the use of an on-chip pull-up resistor has been specified in these registers. On-chip pull-up resistors cannot be connected to bits set to output mode and bits used as alternate-function output pins and analog setting (PMC = 1, ADPC = 1), regardless of the settings of these registers.

These registers can be set by a 1-bit or 8-bit memory manipulation instruction.

Reset signal generation clears these registers to 00H (Only PU4 is set to 01H).

Caution When a port with the PIMn register is input from different potential device to TTL buffer, pull up to the power supply of the different potential device via a external pull-up resistor by setting PUmn = 0.

Figure 5-3. Format of Pull-up Resistor Option Register

Symbol	7	6	5	4	3	2	1	0	Address	After reset	R/W
PU0	0	0	0	0	PU03	PU02	PU01	PU00	F0030H	00H	R/W
PU1	0	PU16	PU15	PU14	PU13	PU12	PU11	PU10	F0031H	00H	R/W
PU3	0	0	0	0	0	0	0	PU30	F0033H	00H	R/W
PU4	0	0	0	0	0	0	0	PU40	F0034H	01H	R/W
PU12	0	0	0	0	0	0	0	PU120	F003CH	00H	R/W
PU14	PU147	0	0	0	0	0	0	PU140	F003EH	00H	R/W

PUmn	Pmn pin on-chip pull-up resistor selection (m = 0, 1, 3, 4, 12, 14; n = 0 to 7)
0	On-chip pull-up resistor not connected
1	On-chip pull-up resistor connected

Caution Be sure to set bits that are not mounted to their initial values.

5.3.4 Port input mode registers (PIMxx)

These registers set the input buffer in 1-bit units.

TTL input buffer can be selected during serial communication with an external device of the different potential.

Port input mode registers can be set by a 1-bit or 8-bit memory manipulation instruction.

Reset signal generation clears these registers to 00H.

Figure 5-4. Format of Port Input Mode Register

Symbol	7	6	5	4	3	2	1	0	Address	After reset	R/W
PIM0	0	0	0	0	PIM03	0	PIM01	0	F0040H	00H	R/W
PIM1	0	PIM16	PIM15	PIM14	PIM13	0	PIM11	PIM10	F0041H	00H	R/W

PIMmn	Pmn pin input buffer selection (m = 0, 1; n = , 1, 3 to 6)
0	Normal input buffer
1	TTL input buffer

Caution Be sure to set bits that are not mounted to their initial values.

5.3.5 Port output mode registers (POMxx)

These registers set the output mode in 1-bit units.

N-ch open drain output (V_{DD} tolerance) mode can be selected during serial communication with an external device of the different potential, and for the SDA00 and SDA20 pins during simplified I^2C communication with an external device of the same potential.

In addition, POMxx register is set with PUxx register, whether or not to use the on-chip pull-up resistor.

These registers can be set by a 1-bit or 8-bit memory manipulation instruction.

Reset signal generation clears these registers to 00H.

Caution An on-chip pull-up resistor is not connected to a bit for which N-ch open drain output (V_{DD} tolerance) mode is set.

Figure 5-5. Format of Port Input Mode Register

Symbol	7	6	5	4	3	2	1	0	Address	After reset	R/W
POM0	0	0	0	0	POM03	POM02	0	POM00	F0050H	00H	R/W
POM1	0	0	POM15	POM14	POM13	POM12	POM11	POM10	F0051H	00H	R/W

POMmn	Pmn pin output mode selection (m = 0, 1; n = 0 to 5)
0	Normal output mode
1	N-ch open-drain output (V_{DD} tolerance) mode

Caution Be sure to set bits that are not mounted to their initial values.

5.3.6 Port mode control registers (PMCxx)

These registers set the digital I/O/analog input in 1-bit units.

These registers can be set by a 1-bit or 8-bit memory manipulation instruction.

Reset signal generation clears these registers to FFH.

Figure 5-6. Format of Port Mode Control Register

Symbol	7	6	5	4	3	2	1	0	Address	After reset	R/W
PMC0	1	1	1	1	PMC03	PMC02	1	1	F0060H	FFH	R/W
PMC12	1	1	1	1	1	1	1	PMC120	F006CH	FFH	R/W
PMC14	PMC147	1	1	1	1	1	1	1	F006EH	FFH	R/W

PMCmn	Pmn pin digital I/O/analog input selection (m = 0, 12; n = 0, 2, 3)
0	Digital I/O (alternate function other than analog input)
1	Analog input

Cautions 1. Select input mode by using port mode registers 0, 12 (PM0, PM12) for the ports which are set by the PMCxx register as analog input.

2. Do not set the pin set by the PMCxx register as digital I/O by the analog input channel specification register (ADS).

3. Be sure to set bits that are not mounted to their initial values.

5.3.7 A/D port configuration register (ADPC)

This register switches the ANI0/P20 to ANI3/P23 pins to digital I/Os of port or analog input of A/D converter.

The ADPC register can be set by an 8-bit memory manipulation instruction.

Reset signal generation sets this register to 00H.

Figure 5-7. Format of A/D Port Configuration Register (ADPC)

Address: F0076H After reset: 00H R/W

Symbol	7	6	5	4	3	2	1	0
ADPC	0	0	0	0	ADPC3	ADPC2	ADPC1	ADPC0

ADPC3	ADPC2	ADPC1	ADPC0	Analog input (A)/digital I/O (D) switching			
				ANI3/P23	ANI2/P22	ANI1/P21	ANI0/P20
0	0	0	0	A	A	A	A
0	0	0	1	D	D	D	D
0	0	1	0	D	D	D	A
0	0	1	1	D	D	A	A
0	1	0	0	D	A	A	A
0	1	1	0	A	A	A	A
0	1	1	1	A	A	A	A
1	0	0	0	A	A	A	A
1	0	0	1	A	A	A	A
1	0	1	0	A	A	A	A
1	0	1	1	A	A	A	A
1	1	0	0	A	A	A	A
1	1	0	1	A	A	A	A
1	1	1	0	A	A	A	A
1	1	1	1	A	A	A	A
Other than above				Setting prohibited			

Cautions 1. Set the port to analog input by ADPC register to the input mode by using port mode registers 2 (PM2).

2. Do not set the pin set by the ADPC register as digital I/O by the analog input channel specification register (ADS).

3. When using AV_{REFP} and AV_{REFM}, set ANI0 and ANI1 to analog input and set the port mode register to the input mode.

5.3.8 Peripheral I/O redirection register (PIOR)

This register is used to specify whether to enable or disable the peripheral I/O redirect function.
This function is used to switch ports to which alternate functions are assigned.
Use the PIOR register to assign a port to the function to redirect and enable the function.
Note that the setting for redirection can be changed until the function is enabled.
The PIOR register can be set by an 8-bit memory manipulation instruction.
Reset signal generation sets this register to 00H.

Figure 5-8. Format of Peripheral I/O Redirection Register (PIOR)

Address: F0077H After reset: 00H R/W

Symbol	7	6	5	4	3	2	1	0
PIOR	0	0	0	0	0	PIOR2	0	PIOR0

PIOR0	Timer function redirection enable/disable
0	Default
1	Redirection enabled

Bit	Alternative function	Setting value	
		0	1
PIOR2	SCLA0	P60	P14
	SDAA0	P61	P13
PIOR0	TI02/TO02	–	P15
	TI03/TO03	–	P14
	TI04/TO04	–	P13
	TI05/TO05	–	P12
	TI06/TO06	–	P11
	TI07/TO07	–	P10

Remark Cannot be used as alternative function.

5.3.9 Global digital input disable register (GDIDIS)

This register is used for batch controlling of the input buffers. Use the default setting for RL78/G1D.
Set the port mode registers (PMxx) for the control of input enable.

Figure 5-9. Format of Global Digital Input Disable Register (GDIDIS)

Address: F007DH After reset: 00H R/W

Symbol	7	6	5	4	3	2	1	0
GDIDIS	0	0	0	0	0	0	0	GDIDIS0

GDIDIS0	Setting of batch control of input buffers
0	Input to input buffers permitted (default)
1	Setting prohibited

5.4 Port Function Operations

Port operations differ depending on whether the input or output mode is set, as shown below.

5.4.1 Writing to I/O port

(1) Output mode

A value is written to the output latch by a transfer instruction, and the output latch contents are output from the pin.
Once data is written to the output latch, it is retained until data is written to the output latch again.
The data of the output latch is cleared when a reset signal is generated.

(2) Input mode

A value is written to the output latch by a transfer instruction, but since the output buffer is off, the pin status does not change. Therefore, byte data can be written to the ports used for both input and output.
Once data is written to the output latch, it is retained until data is written to the output latch again.
The data of the output latch is cleared when a reset signal is generated.

5.4.2 Reading from I/O port

(1) Output mode

The output latch contents are read by a transfer instruction. The output latch contents do not change.

(2) Input mode

The pin status is read by a transfer instruction. The output latch contents do not change.

5.4.3 Operations on I/O port

(1) Output mode

An operation is performed on the output latch contents, and the result is written to the output latch. The output latch contents are output from the pins.
Once data is written to the output latch, it is retained until data is written to the output latch again.
The data of the output latch is cleared when a reset signal is generated.

(2) Input mode

The pin level is read and an operation is performed on its contents. The result of the operation is written to the output latch, but since the output buffer is off, the pin status does not change. Therefore, byte data can be written to the ports used for both input and output.
The data of the output latch is cleared when a reset signal is generated.

5.4.4 Handling different potential (1.8 V, 2.5 V) by using $EV_{DD} \leq V_{DD}$

When connecting an external device operating on a different potential (1.8 V, 2.5 V), it is possible to connect the I/O pins of general ports.

5.4.5 Handling different potential (1.8 V, 2.5 V) by using I/O buffers

It is possible to connect an external device operating on a different potential (1.8 V or 2.5 V) by switching I/O buffers with the port input mode register (PIMxx) and port output mode register (POMxx).

When receiving input from an external device with a different potential (1.8 V or 2.5 V), set the port input mode registers 0, 1 (PIM0, PIM1) on a bit-by-bit basis to enable normal input (CMOS)/TTL input buffer switching.

When outputting data to an external device with a different potential (1.8 V or 2.5 V), set the port output mode registers 0, 1 (POM0, POM1) on a bit-by-bit basis to enable normal output (CMOS)/N-ch open drain (V_{DD} tolerance) switching.

The connection of a serial interface is described below.

(1) Setting procedure when using input pins of UART0, UART1, CSI00, and CSI20 functions for the TTL input buffer

In case of UART0: P11
In case of UART1: P03
In case of CSI00: P10, P11
In case of CSI20: P14, P15

<1> Using an external resistor, pull up externally the pin to be used to the power supply of the target device (on-chip pull-up resistor cannot be used).

<2> Set the corresponding bit of the PIM0 and PIM1 registers to 1 to switch to the TTL input buffer. For V_{IH} and V_{IL}, refer to the DC characteristics when the TTL input buffer is selected.

<3> Enable the operation of the serial array unit and set the mode to the UART/CSI mode.

(2) Setting procedure when using output pins of UART0, UART1, CSI00, and CSI20 functions in N-ch open-drain output mode

In case of UART0: P12
In case of UART1: P02
In case of CSI00: P10, P12
In case of CSI20: P13, P15

<1> Using an external resistor, pull up externally the pin to be used to the power supply of the target device (on-chip pull-up resistor cannot be used).
<2> After reset release, the port mode is the input mode (Hi-Z).
<3> Set the output latch of the corresponding port to 1.
<4> Set the corresponding bit of the POM0 and POM1 registers to 1 to set the N-ch open drain output (V_{DD} tolerance) mode.
<5> Enable the operation of the serial array unit and set the mode to the UART/CSI mode.
<6> Set the corresponding bit of the PM0 and PM1 registers to the output mode. At this time, the output data is high level, so the pin is in the Hi-Z state.

(3) Setting procedure when using I/O pins of IIC00 and IIC20 functions with a different potential (1.8 V, 2.5 V, 3 V)

In case of IIC00: P10, P11
In case of IIC20: P14, P15

<1> Using an external resistor, pull up externally the pin to be used to the power supply of the target device (on-chip pull-up resistor cannot be used).
<2> After reset release, the port mode is the input mode (Hi-Z).
<3> Set the output latch of the corresponding port to 1.
<4> Set the corresponding bit of the POM1 register to 1 to set the N-ch open drain output (V_{DD} tolerance) mode.
<5> Set the corresponding bit of the PIM1 register to 1 to switch to the TTL input buffer. For V_{IH} and V_{IL}, refer to the DC characteristics when the TTL input buffer is selected.
<6> Enable the operation of the serial array unit and set the mode to the simplified I^2C mode.
<7> Set the corresponding bit of the PM1 register to the output mode (data I/O is possible in the output mode). At this time, the output data is high level, so the pin is in the Hi-Z state.

5.5 Register Settings When Using Alternate Function

5.5.1 Basic concept when using alternate function

In the beginning, for a pin also assigned to be used for analog input, use the ADPC register or port mode control register (PMCxx) to specify whether to use the pin for analog input or digital input/output.

Figure 5-10 shows the basic configuration of an output circuit for pins used for digital input/output. The output of the output latch for the port and the output of the alternate SAU function are input to an AND gate. The output of the AND gate is input to an OR gate. The output of an alternate function other than SAU (TAU, RTC, clock/buzzer output, etc.) is connected to the other input pin of the OR gate. When such kind of pins are used by the port function or an alternate function, the unused alternate function must not hinder the output of the function to be used. An idea of basic settings for this kind of case is shown in Table 5-4.

Figure 5-10. Basic Configuration of Output Circuit for Pins

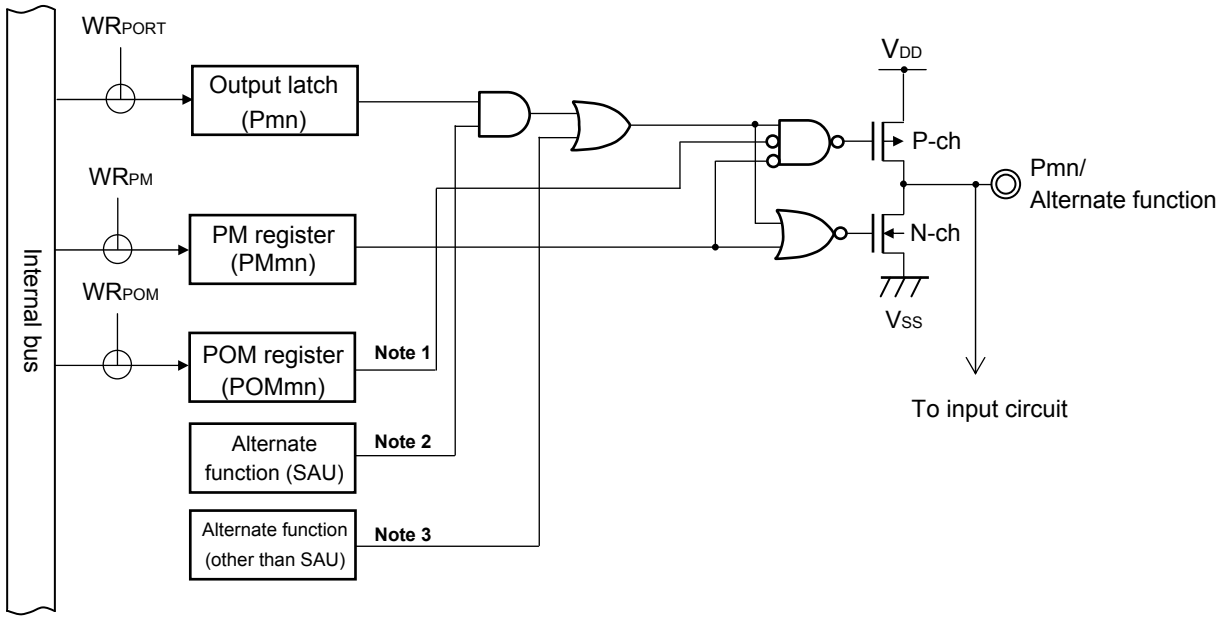

Notes 1. When there is no POM register, this signal should be considered to be low level (0).

2. When there is no alternate function, this signal should be considered to be high level (1).

3. When there is no alternate function, this signal should be considered to be low level (0).

Remark m: Port number (m = 0 to 7, 12 to 14); n: Bit number (n = 0 to 7)

Table 5-4. Concept of Basic Settings

Output Function of Used Pin	Output Settings of Unused Alternate Function		
	Output Function for Port	Output Function for SAU	Output Function for other than SAU
Output function for port	–	Output is high (1)	Output is low (0)
Output function for SAU	High (1)	–	Output is low (0)
Output function for other than SAU	Low (0)	Output is high (1)	Output is low (0) Note

Note Since more than one output function other than SAU may be assigned to a single pin, the output of an unused alternate function must be set to low level (0). For details on the setting method, see **5.5.2 Register settings for alternate function whose output function is not used**.

5.5.2 Register settings for alternate function whose output function is not used

When the output of an alternate function of the pin is not used, the following settings should be made. Note that when the peripheral I/O redirection function is the target, the output can be switched to another pin by setting the peripheral I/O redirection register (PIOR). This allows usage of the port function or other alternate function assigned to the target pin.

(1) SOp = 1, TxDq = 1 (settings when the serial output (SOp/TxDq) of SAU is not used)
When the serial output (SOp/TxDq) is not used, such as, a case in which only the serial input of SAU is used, set the bit in serial output enable register m (SOEm) which corresponds to the unused output to 0 (output disabled) and set the SOmn bit in serial output register m (SOm) to 1 (high). These are the same settings as the initial state.

(2) SCKp = 1, SDAr = 1, SCLr = 1 (settings when channel n in SAU is not used)
When SAU is not used, set bit n (SEmn) in serial channel enable status register m (SEm) to 0 (operation stopped state), set the bit in serial output enable register m (SOEm) which corresponds to the unused output to 0 (output disabled), and set the SOmn and CKOmn bits in serial output register m (SOm) to 1 (high). These are the same settings as the initial state.

(3) TOmn = 0 (settings when the output of channel n in TAU is not used)
When the TOmn output of TAU is not used, set the bit in timer output enable register 0 (TOE0) which corresponds to the unused output to 0 (output disabled) and set the bit in timer output register 0 (TO0) to 0 (low). These are the same settings as the initial state.

(4) PCLBUZn = 0 (setting when clock/buzzer output is not used)
When the clock/buzzer output is not used, set the PCLOEn bit in clock output select register n (CKSn) to 0 (output disabled). This is the same setting as the initial state.

5.5.3 Register setting examples for used port and alternate functions

Register setting examples for used port and alternate functions are shown in Table 5-5. The registers used to control the port functions should be set as shown in Table 5-5. See the following remark for legends used in Table 5-5.

Remark –: Not supported
×: don't care
PIORx: Peripheral I/O redirection register
POMxx: Port output mode register
PMCxx: Port mode control register
PMxx: Port mode register
Pxx: Port output latch
Functions in parentheses can be assigned via settings in the peripheral I/O redirection register (PIOR).

Table 5-5. Setting Examples of Registers and Output Latches When Using Alternate Function (1/6)

Pin Name	Used Function		PIORx	POMxx	PMCxx	PMxx	Pxx	Alternate Function Output	
	Function Name	Function Name						SAU Output Function	Other than SAU
P00	P00	Input	–	×	–	1	×	–	–
		Output	–	0	–	0	0/1	–	–
		N-ch open drain output	–	1	–	0	0/1	–	–
	TI00	Input	–	×	–	1	×	–	–
P01	P01	Input	–	–	–	1	×	–	–
		Output	–	–	–	0	0/1	–	TO00 = 0
	TO00	Output	–	–	–	0	0	–	×
P02	P02	Input	–	×	0	1	×	×	–
		Output	–	0	0	0	0/1	TxD1 = 1	–
		N-ch open drain output	–	1	0	0	0/1		
	ANI17	Analog input	–	–	1	1	×	×	–
	TxD1	Output	–	0/1	0	0	1	×	–
P03	P03	Input	–	×	0	1	×	×	–
		Output	–	0	0	0	0/1	×	–
		N-ch open drain output	–	1	0	0	0/1	×	
	ANI16	Analog input	–	–	1	1	×	×	–
	RxD1	Input	–	–	0	1	×	×	–
P10	P10	Input	–	×	–	1	×	×	–
		Output	–	0	–	0	0/1	SCK00/ SCL00 = 1	(TO07) = 0
		N-ch open drain output	–	1	–	0	0/1		
	SCK00	Input	–	×	–	1	×	×	×
		Output	–	0/1	–	0	1	×	(TO07) = 0
	SCL00	Output	–	0/1	–	0	1	×	(TO07) = 0
	(TI07)	Input	PIOR1 = 1	×	–	1	×	×	×
	(TO07)	Output	PIOR0 = 1	0	–	0	0	×	×

Table 5-5. Setting Examples of Registers and Output Latches When Using Alternate Function (2/6)

Pin Name	Used Function		PIORx	POMxx	PMCxx	PMxx	Pxx	Alternate Function Output	
	Function Name	I/O						SAU Output Function	Other than SAU
P11	P11	Input	–	×	–	1	×	×	–
		Output	–	0	–	0	0/1	SDA00 = 1	(TO06) = 0
		N-ch open drain output	–	1	–	0	0/1		
	SI00	Input	–	×	–	1	×	×	×
	RxD0	Input	–	×	–	1	×	×	×
	SDA00	I/O	–	1	–	0	1	×	(TO06) = 0
	(TI06)	Input	PIOR0 = 1	×	–	1	×	×	×
	(TO06)	Output	PIOR0 = 1	0	–	0	0	SDA00 = 1	×
P12	P12	Input	–	×	–	1	×	×	×
		Output	–	0	–	0	0/1	TxD0/ SCL00 = 1	(TO05) = 0
		N-ch open drain output	–	1	–	0	0/1		
	SO00	Output	–	0/1	–	0	1	×	(TO05) = 0
	TxD0	Output	–	0/1	–	0	1	×	(TO05) = 0
	(TI05)	Input	PIOR0 = 1	×	–	1	×	×	×
	(TO05)	Output	PIOR0 = 1	0	–	0	0	TxD0/ SCL00 = 1	×
P13	P13	Input	–	×	–	1	×	×	–
		Output	–	0	–	0	0/1	SO20/ SDAA0 = 1	TO04 = 0
		N-ch open drain output	–	1	–	0	0/1		
	SO20	Output	–	0/1	–	0	1	×	TO04 = 0
	(SDAA0)	I/O	PIOR2 = 1	1	–	0	1	×	
	(TI04)	Input	PIOR0 = 1	×	–	1	×	×	×
	(TO04)	Output	PIOR0 = 1	0	–	0	0	×	×
P14	P14	Input	–	×	–	1	×	×	–
		Output	–	0	–	0	0/1	SDA20/ (SCLA0) = 1	TO03 = 0
		N-ch open drain output	–	1	–	0	0/1		
	SI20	Input	–	×	–	1	×	×	×
	SDA20	I/O	–	1	–	0	1	×	TO03 = 0
	(SCLA0)	I/O	PIOR2 = 1	1	–	0	1	×	
	(TI03)	Input	PIOR0 = 1	×	–	1	×	×	×
	(TO03)	Output	PIOR0 = 1	0	–	0	0	×	×
P15	P15	Input	–	×	–	1	×	×	–
		Output	–	0	–	0	0/1	SCK20/ SCL20 = 1	TO02 = 0
		N-ch open drain output	–	1	–	0	0/1		
	SCK20	I/O	–	1	–	0	1	×	TO02 = 0
	SCL20	I/O	–	1	–	0	1	×	
	(TI02)	Input	PIOR0 = 1	×	–	1	×	×	×
	(TO02)	Output	PIOR0 = 1	0	–	0	0	×	×
P16	P16	Input	–	–	–	1	×	×	×
		Output	–	–	–	0	0/1	×	TO01 = 0
	TO01	Output	–	–	–	0	0	×	×
	INTP5	Input	–	–	–	1	×	×	×

Table 5-5. Setting Examples of Registers and Output Latches When Using Alternate Function (3/6)

Pin Name	Used Function		ADPC	PDM2	PMxx	Pxx
	Function Name	I/O				
P20	P20	Input	ADPC = 01H	×	1	×
		Output	ADPC = 01H	×	0	0/1
	ANI0	Analog input	ADPC = 00H/02H to 0FH	00x0xx0x, 10x0xx0x	1	×
	AV_{REFP}	Reference voltage	ADPC = 00H/02H to 0FH	01x0xx0x	1	×
P21	P21	Input	ADPC = 01H/02H	×	1	×
		Output	ADPC = 01H/02H	×	0	0/1
	ANI1	Analog input	ADPC = 00H/03H to 0FH	xx00xx0x	1	×
	AV_{REFM}	Reference voltage	ADPC = 00H/03H to 0FH	xx10xx0x	1	×
P22	P22	Input	ADPC = 01H to 03H	×	1	×
		Output	ADPC = 01H to 03H	×	0	0/1
	ANI2	Analog input	ADPC = 00H/04H to 0FH	×	1	×
P23	P23	Input	ADPC = 01H to 04H	×	1	×
		Output	ADPC = 01H to 04H	×	0	0/1
	ANI3	Analog input	ADPC = 00H/05H to 0FH	×	1	×

Table 5-5. Setting Examples of Registers and Output Latches When Using Alternate Function (4/6)

Pin Name	Used Function		PIORx	POMxx	PMCxx	PMxx	Pxx	Alternate Function Output	
	Function Name	I/O						SAU Output Function	Other than SAU
P30	P30	Input	–	–	–	1	×	–	×
		Output	–	–	–	0	0/1	–	×
	INTP3	Input	–	–	–	1	×	–	×
	RTC1HZ	Output	–	–	–	0	0	–	×
P40	P40	Input	–	–	–	1	×	–	–
		Output	–	–	–	0	0/1	–	–
P60	P60	Input	–	×	–	1	×	×	–
		Output	–	0	–	0	0/1	(SCLA0) = 1	–
		N-ch open drain output	–	1	–	0	0/1		–
	(SCLA0)	I/O	PIOR2 = 0	1	–	0	1	×	–
P61	P61	Input	–	×	–	1	×	×	–
		Output	–	0	–	0	0/1	(SDAA0) = 1	–
		N-ch open drain output	–	1	–	0	0/1		–
	(SDAA0)	I/O	PIOR2 = 0	1	–	0	1	×	–
P70	SCK21	Output	–	–	–	0	1	×	–
P71	SI21	Input	–	×	–	1	×	×	–
P72	SO21	Output	–	–	–	0	1	×	–
P77	INTRF	Input	–	–	–	1	×	–	–
P120	P120	Input	–	–	0	1	×	–	–
		Output	–	–	0	0	0/1	–	–
	ANI19	Analog input	–	–	1	1	×	–	–

Table 5-5. Setting Examples of Registers and Output Latches When Using Alternate Function (5/6)

Pin Name	Used Function		CMC (EXCLK, OSCSEL,EXCKS,OSCSELS)	Pxx
	Function Name	I/O		
P121	P121	Input	00xx/10 xx/11 xx	×
	X1	–	01 xx	–
P122	P122	Input	00 xx / 10 xx	×
	X2	–	01 xx	–
	EXCLK	–	11 xx	–
P123	P123	Input	xx 00/xx 10/xx 11	×
	XT1	–	xx 01	–
P124	P124	Input	xx 00 / xx 10	×
	XT2	–	xx 01	–
	EXCLKS	Input	xx 11	–

Table 5-5. Setting Examples of Registers and Output Latches When Using Alternate Function (6/6)

Pin Name	Used Function		PIORx	POMxx	PMCxx	PMxx	Pxx	Alternate Function Output	
	Function Name	I/O						SAU Output Function	Other than SAU
P130	P130	Output	–	–	–	–	0/1	–	–
P137	P137	Input	–	–	–	–	×	–	–
	INTP0	Input	–	–	–	–	×	–	–
P140	P140	Input	–	–	–	1	×	–	×
		Output	–	–	–	0	0/1	–	PCLBUZ0 = 0
	PCLBUZ0	Output	–	–	–	0	0	–	×
	INTP6	Input	–	–	–	1	×	–	×
P147	P147	Input	–	–	0	1	×	–	–
		Output	–	–	0	0	0/1	–	–
	ANI18	Analog input	–	–	1	1	×	–	–

5.6 Cautions When Using Port Function

5.6.1 Cautions on 1-bit manipulation instruction for port register n (Pn)

When a 1-bit manipulation instruction is executed on a port that provides both input and output functions, the output latch value of an input port that is not subject to manipulation may be written in addition to the targeted bit.

Therefore, it is recommended to rewrite the output latch when switching a port from input mode to output mode.

<Example> When P10 is an output port, P11 to P17 are input ports (all pin statuses are high level), and the port latch value of port 1 is 00H, if the output of output port P10 is changed from low level to high level via a 1-bit manipulation instruction, the output latch value of port 1 is FFH.

Explanation: The targets of writing to and reading from the Pn register of a port whose PMnm bit is 1 are the output latch and pin status, respectively.

A 1-bit manipulation instruction is executed in the following order in the RL78/G1D.

<1> The Pn register is read in 8-bit units.
<2> The targeted one bit is manipulated.
<3> The Pn register is written in 8-bit units.

In step <1>, the output latch value (0) of P10, which is an output port, is read, while the pin statuses of P11 to P17, which are input ports, are read. If the pin statuses of P11 to P17 are high level at this time, the read value is FEH.

The value is changed to FFH by the manipulation in <2>.

FFH is written to the output latch by the manipulation in <3>.

Figure 5-11. Bit Manipulation Instruction (P10)

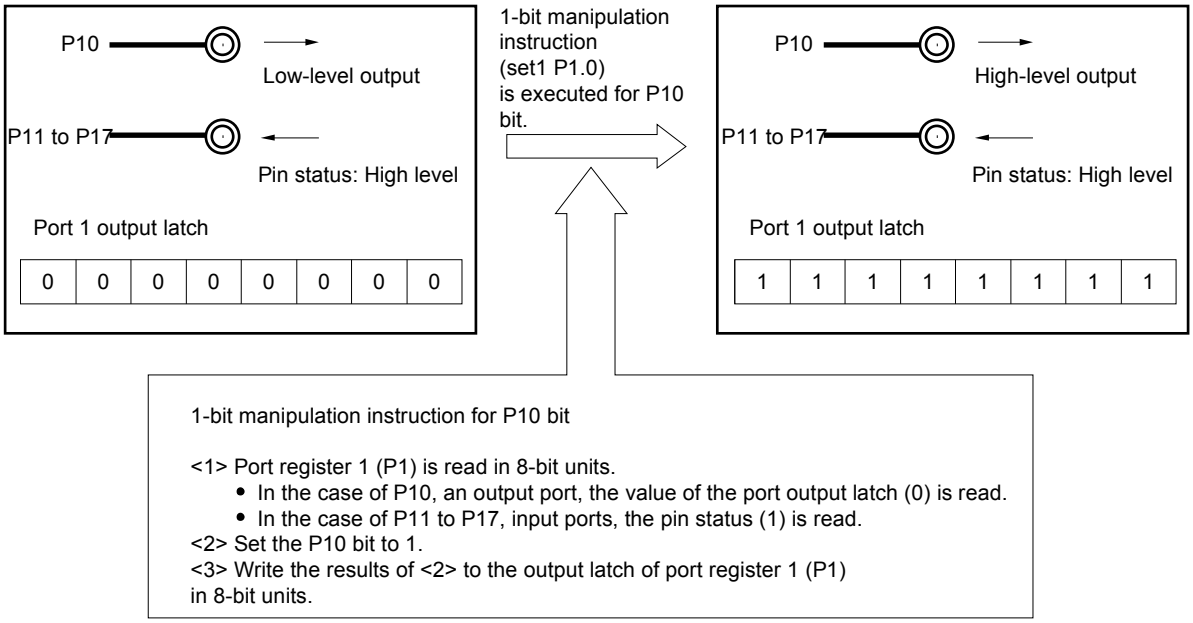

5.6.2 Notes on specifying the pin settings

If the output function of an alternate function is assigned to a pin that is also used as an output pin, the output of the unused alternate function must be set to its initial state so as to prevent conflicting outputs. This also applies to the functions assigned by using the peripheral I/O redirection register (PIOR). For details about the alternate output function, see 5.5 Settings of Port Mode Register, and Output Latch When Using Alternate Function.

No specific setting is required for input pins because the output function of their alternate functions is disabled (the buffer output is Hi-Z).

Disabling the unused functions, including blocks that are only used for input or do not have I/O, is recommended to lower power consumption.

CHAPTER 6 CLOCK GENERATOR

6.1 Functions of Clock Generator

The clock generator generates the clock to be supplied to the CPU and peripheral hardware.
The following three kinds of system clocks and clock oscillators are selectable.

(1) Main system clock

<1> X1 oscillator

This circuit oscillates a clock of f_X = 1 to 20 MHz by connecting a resonator to X1 and X2.
Oscillation can be stopped by executing the STOP instruction or setting of the MSTOP bit (bit 7 of the clock operation status control register (CSC)).

<2> High-speed on-chip oscillator

The frequency at which to oscillate can be selected from among f_{IH} = 32, 24, 16, 12, 8, 4, or 1 MHz (typ.) by using the option byte (000C2H). After a reset release, the CPU always starts operating with this high-speed on-chip oscillator clock. Oscillation can be stopped by executing the STOP instruction or setting the HIOSTOP bit (bit 0 of the CSC register).
The frequency specified by using an option byte can be changed by using the high-speed on-chip oscillator frequency select register (HOCODIV). For details about the frequency, see **Figure 6-9 Format of High-speed On-chip Oscillator Frequency Select Register (HOCODIV)**.
The frequencies that can be specified for the high-speed on-chip oscillator by using the option byte and the high-speed on-chip oscillator frequency select register (HOCODIV) are shown below.

Power Supply Voltage	Oscillation Frequency (MHz)									
	1	2	3	4	6	8	12	16	24	32
2.7 V ≤ V_{DD} ≤ 3.6 V	✓	✓	✓	✓	✓	✓	✓	✓	✓	✓
2.4 V ≤ V_{DD} ≤ 3.6 V	✓	✓	✓	✓	✓	✓	✓	✓	–	–
1.8 V ≤ V_{DD} ≤ 3.6 V	✓	✓	✓	✓	✓	✓	–	–	–	–
1.6 V ≤ V_{DD} ≤ 3.6 V	✓	✓	✓	✓	–	–	–	–	–	–

An external main system clock (f_{EX} = 1 to 20 MHz) can also be supplied from the EXCLK/X2/P122 pin. An external main system clock input can be disabled by executing the STOP instruction or setting of the MSTOP bit.
As the main system clock, a high-speed system clock (X1 clock or external main system clock) or high-speed on-chip oscillator clock can be selected by setting of the MCM0 bit (bit 4 of the system clock control register (CKC)).

Operating frequency range of main system clock is limited by power supply voltage V_{DD}. Flash operating voltage mode must be set by CMODE0 and CMODE1 bits of option byte (000C2H) (see CHAPTER 25).

(2) Subsystem clock

● XT1 clock oscillator

This circuit oscillates a clock of f_{XT} = 32.768 kHz by connecting a 32.768 kHz resonator to XT1 and XT2. Oscillation can be stopped by setting the XTSTOP bit (bit 6 of the clock operation status control register (CSC)).

An external subsystem clock (f_{EXS} = 32.768 KHz) can also be supplied from the EXCLKS/XT2/P124 pin. An external subsystem clock input can be disabled by the setting of the XTSTOP bit.

(3) Low-speed on-chip oscillator clock (Low-speed On-chip oscillator)

This circuit oscillates a clock of f_{IL} = 15 kHz (TYP.).
The low-speed on-chip oscillator clock cannot be used as the CPU clock.
Only the following peripheral hardware runs on the low-speed on-chip oscillator clock.

- Watchdog timer
- Real-time clock
- 12-bit Interval timer

This clock operates when bit 4 (WDTON) of the option byte (000C0H), bit 4 (WUTMMCK0) of the subsystem clock supply mode control register (OSMC), or both are set to 1.
However, when WDTON = 1, WUTMMCK0 = 0, and bit 0 (WDSTBYON) of the option byte (000C0H) is 0, oscillation of the low-speed on-chip oscillator stops if the HALT or STOP instruction is executed.

Caution The low-speed on-chip oscillator clock (f_{IL}) can only be selected as the real-time clock count clock when the fixed-cycle interrupt function is used.

(4) RF transceiver reference clock

This circuit oscillates a clock of f_{XRF} = 32 MHz by connecting a resonator to the XTAL1_RF and XTAL2_RF pins. This oscillation control is set with Renesas Bluetooth Low Energy protocol stack.

Remark f_X: X1 clock oscillation frequency
f_{IH}: High-speed on-chip oscillator clock frequency
f_{EX}: External main system clock frequency
f_{XT}: XT1 clock oscillation frequency
f_{EXS}: External subsystem clock frequency
f_{IL}: Low-speed on-chip oscillator clock frequency
f_{XRF}: RF reference clock oscillating frequency

6.2 Configuration of Clock Generator

The clock generator includes the following hardware.

Table 6-1. Configuration of Clock Generator

Item	Configuration
Control registers	Clock operation mode control register (CMC) System clock control register (CKC) Clock operation status control register (CSC) Oscillation stabilization time counter status register (OSTC) Oscillation stabilization time select register (OSTS) Peripheral enable register 0 (PER0) Subsystem clock supply mode control register (OSMC) High-speed on-chip oscillator frequency select register (HOCODIV) High-speed on-chip oscillator trimming register (HIOTRM)
Oscillators	X1 oscillator XT1 oscillator High-speed on-chip oscillator Low-speed on-chip oscillator

Figure 6-1. Block Diagram of Clock Generator

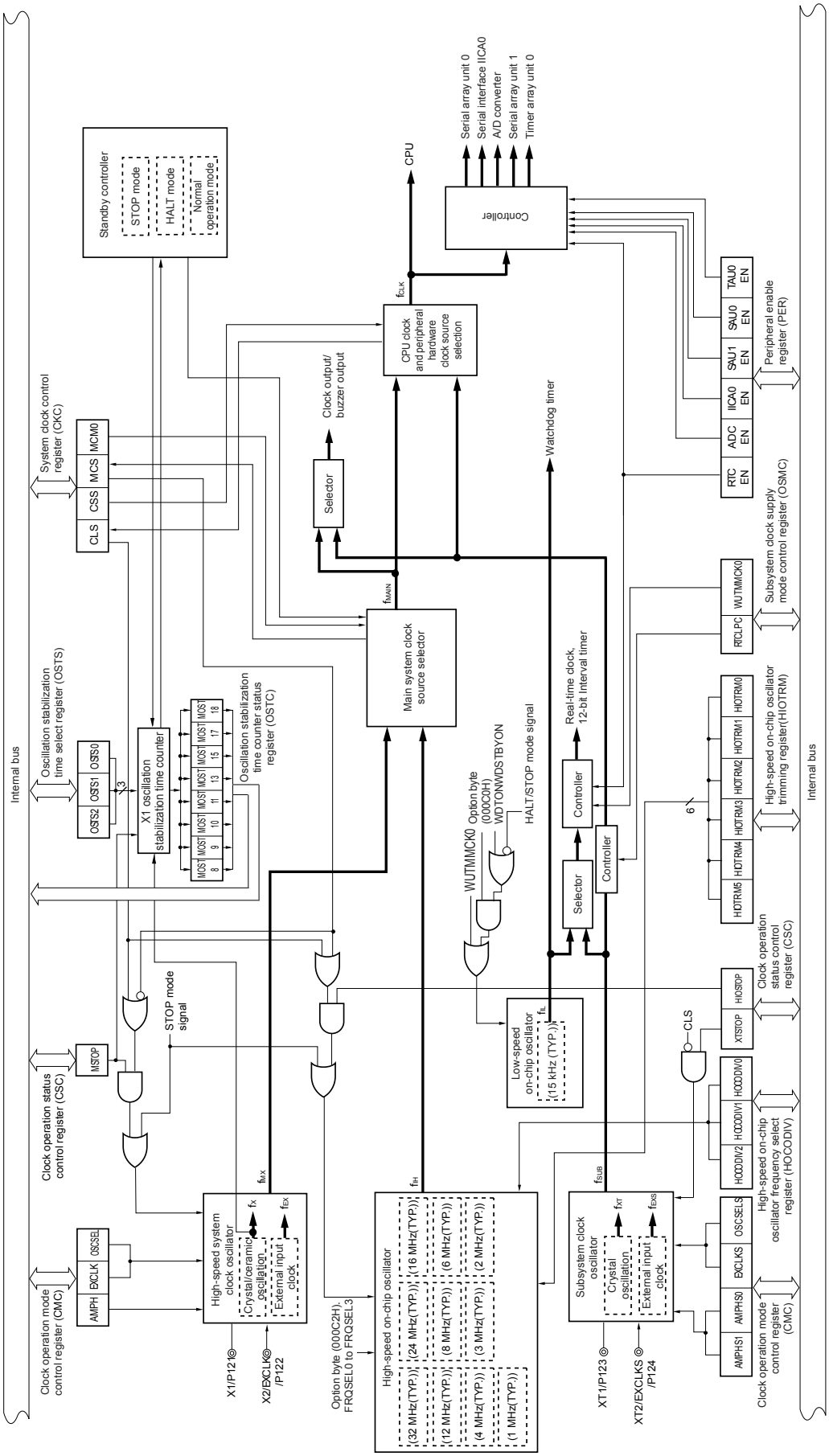

(**Remark** is listed on the next page.)

Remark f_X: X1 clock oscillation frequency
f_{IH}: High-speed on-chip oscillator clock frequency
f_{EX}: External main system clock frequency
f_{MX}: High-speed system clock frequency
f_{MAIN}: Main system clock frequency
f_{XT}: XT1 clock oscillation frequency
f_{EXS}: External subsystem clock frequency
f_{SUB}: Subsystem clock frequency
f_{CLK}: CPU/peripheral hardware clock frequency
f_{IL}: Low-speed on-chip oscillator clock frequency

6.3 Registers Controlling Clock Generator

The following nine registers are used to control the clock generator.

- Clock operation mode control register (CMC)
- System clock control register (CKC)
- Clock operation status control register (CSC)
- Oscillation stabilization time counter status register (OSTC)
- Oscillation stabilization time select register (OSTS)
- Peripheral enable register 0 (PER0)
- Subsystem clock supply mode control register (OSMC)
- High-speed on-chip oscillator frequency select register (HOCODIV)
- High-speed on-chip oscillator trimming register (HIOTRM)

6.3.1 Clock operation mode control register (CMC)

This register is used to set the operation mode of the X1/P121, X2/EXCLK/P122, XT1/P123, and XT2/EXCLKS/P124 pins, and to select a gain of the oscillator.

The CMC register can be written only once by an 8-bit memory manipulation instruction after reset release. This register can be read by an 8-bit memory manipulation instruction.

Reset signal generation clears this register to 00H.

Figure 6-2. Format of Clock Operation Mode Control Register (CMC)

Address: FFFA0H After reset: 00H R/W

Symbol	7	6	5	4	3	2	1	0
CMC	EXCLK	OSCSEL	EXCLKS	OSCSELS	0	AMPHS1	AMPHS0	AMPH

EXCLK	OSCSEL	High-speed system clock pin operation mode	X1/P121 pin	X2/EXCLK/P122 pin
0	0	Input port mode	Input port	
0	1	X1 oscillation mode	Crystal/ceramic resonator connection	
1	0	Input port mode	Input port	
1	1	External clock input mode	Input port	External clock input

EXCLKS	OSCSELS	Subsystem clock pin operation mode	XT1/P123 pin	XT2/EXCLKS/P124 pin
0	0	Input port mode	Input port	
0	1	XT1 oscillation mode	Crystal resonator connection	
1	0	Input port mode	Input port	
1	1	External clock input mode	Input port	External clock input

AMPHS1	AMPHS0	XT1 oscillator oscillation mode selection
0	0	Low power consumption oscillation (default)
0	1	Normal oscillation
1	0	Ultra-low power consumption oscillation
1	1	Setting prohibited

AMPH	Control of X1 clock oscillation frequency
0	1 MHz ≤ f_X ≤ 10 MHz
1	10 MHz < f_X ≤ 20 MHz

Cautions 1. The CMC register can be written only once after reset release, by an 8-bit memory manipulation instruction. When using the CMC register with its initial value (00H), be sure to set the register to 00H after a reset ends in order to prevent malfunction due to a program loop. Such a malfunction becomes unrecoverable when a value other than 00H is mistakenly written.

2. After reset release, set the CMC register before X1 or XT1 oscillation is started as set by the clock operation status control register (CSC).

3. Be sure to set the AMPH bit to 1 if the X1 clock oscillation frequency exceeds 10 MHz.

4. Specify the settings for the AMPH, AMPHS1, and AMPHS0 bits while f_{IH} is selected as f_{CLK} after a reset ends (before f_{CLK} is switched to f_{MX} or f_{sub}).

5. Oscillation stabilization time of f_{XT}, counting on the software.

6. Although the maximum system clock frequency is 32 MHz, the maximum frequency of the X1 oscillator is 20 MHz.

(**Cautions** and **Remark** are given on the next page.)

Cautions 7. The XT1 oscillator is a circuit with low amplification in order to achieve low-power consumption. Note the following points when designing the circuit.

- **Pins and circuit boards include parasitic capacitance. Therefore, perform oscillation evaluation using a circuit board to be actually used and confirm that there are no problems.**
- **Before using the ultra-low power consumption oscillation (AMPHS1, AMPHS0 = 1, 0) as the mode of the XT1 oscillator, evaluate the resonators described in 6.7 Resonator and Oscillator Constants.**
- **Make the wiring between the XT1 and XT2 pins and the resonators as short as possible, and minimize the parasitic capacitance and wiring resistance. Note this particularly when the ultra-low power consumption oscillation (AMPHS1, AMPHS0 = 1, 0) is selected.**
- **Configure the circuit of the circuit board, using material with little wiring resistance.**
- **Place a ground pattern that has the same potential as V_{SS} as much as possible near the XT1 oscillator.**
- **Be sure that the signal lines between the XT1 and XT2 pins, and the resonators do not cross with the other signal lines. Do not route the wiring near a signal line through which a high fluctuating current flows.**
- **The impedance between the XT1 and XT2 pins may drop and oscillation may be disturbed due to moisture absorption of the circuit board in a high-humidity environment or dew condensation on the board. When using the circuit board in such an environment, take measures to damp-proof the circuit board, such as by coating.**
- **When coating the circuit board, use material that does not cause capacitance or leakage between the XT1 and XT2 pins.**

Remark fx: X1 clock frequency

6.3.2 System clock control register (CKC)

This register is used to select a CPU/peripheral hardware clock and a main system clock.

The CKC register can be set by a 1-bit or 8-bit memory manipulation instruction.

Reset signal generation sets this register to 00H.

Figure 6-3. Format of System Clock Control Register (CKC)

Address: FFFA4H After reset: 00H R/W[Note 1]

Symbol	<7>	<6>	<5>	<4>	3	2	1	0
CKC	CLS	CSS	MCS	MCM0	0	0	0	0

CLS	Status of CPU/peripheral hardware clock (f_{CLK})
0	Main system clock (f_{MAIN})
1	Subsystem clock (f_{SUB})

CSS	Selection of CPU/peripheral hardware clock (f_{CLK})
0	Main system clock (f_{MAIN})
1[Note 2]	Subsystem clock (f_{SUB})

MCS	Status of Main system clock (f_{MAIN})
0	High-speed on-chip oscillator clock (f_{IH})
1	High-speed system clock (f_{MX})

MCM0[Note 2]	Main system clock (f_{MAIN}) operation control
0	Selects the high-speed on-chip oscillator clock (f_{IH}) as the main system clock (f_{MAIN})
1	Selects the high-speed system clock (f_{MX}) as the main system clock (f_{MAIN})

Notes 1. Bits 7 and 5 are read-only.

2. Changing the value of the MCM0 bit is prohibited while the CSS bit is set to 1.

Remark f_{IH}: High-speed on-chip oscillator clock frequency

f_{MX}: High-speed system clock frequency

f_{MAIN}: Main system clock frequency

f_{SUB}: Subsystem clock frequency

Cautions 1. Be sure to set bit 3 to 0 to 0.

2. The clock set by the CSS bit is supplied to the CPU and peripheral hardware. If the CPU clock is changed, therefore, the clock supplied to peripheral hardware (except the real-time clock, 12-bit interval timer, clock output/buzzer output, and watchdog timer) is also changed at the same time. Consequently, stop each peripheral function when changing the CPU/peripheral hardware clock.

3. If the subsystem clock is used as the peripheral hardware clock, the operations of the A/D converter and IICA are not guaranteed. For the operating characteristics of the peripheral hardware, refer to the chapters describing the various peripheral hardware as well as CHAPTER 30 ELECTRICAL SPECIFICATIONS.

6.3.3 Clock operation status control register (CSC)

This register is used to control the operations of the high-speed system clock, high-speed on-chip oscillator clock, and subsystem clock (except the low-speed on-chip oscillator clock).

The CSC register can be set by a 1-bit or 8-bit memory manipulation instruction.

Reset signal generation sets this register to C0H.

Figure 6-4. Format of Clock Operation Status Control Register (CSC)

Address: FFFA1H After reset: C0H R/W

Symbol	<7>	<6>	5	4	3	2	1	<0>
CSC	MSTOP	XTSTOP	0	0	0	0	0	HIOSTOP

MSTOP	High-speed system clock operation control		
	X1 oscillation mode	External clock input mode	Input port mode
0	X1 oscillator operating	External clock from EXCLK pin is valid	Input port
1	X1 oscillator stopped	External clock from EXCLK pin is invalid	

XTSTOP	Subsystem clock operation control		
	XT1 oscillation mode	External clock input mode	Input port mode
0	XT1 oscillator operating	External clock from EXCLKS pin is valid	Input port
1	XT1 oscillator stopped	External clock from EXCLKS pin is invalid	

HIOSTOP	High-speed on-chip oscillator clock operation control
0	High-speed on-chip oscillator operating
1	High-speed on-chip oscillator stopped

Cautions 1. After reset release, set the clock operation mode control register (CMC) before setting the CSC register.

2. Set the oscillation stabilization time select register (OSTS) before setting the MSTOP bit to 0 after releasing reset. Note that if the OSTS register is being used with its default settings, the OSTS register is not required to be set here.

3. To start X1 oscillation as set by the MSTOP bit, check the oscillation stabilization time of the X1 clock by using the oscillation stabilization time counter status register (OSTC).

4. When starting XT1 oscillation by setting the XSTOP bit, wait for oscillation of the subsystem clock to stabilize by setting a wait time using software.

5. Do not stop the clock selected for the CPU peripheral hardware clock (f_{CLK}) with the OSC register.

6. The setting of the flags of the register to stop clock oscillation (invalidate the external clock input) and the condition before clock oscillation is to be stopped are as Table 6-2. The condition before stopping clock must be confirmed before the stopping.

Table 6-2. Stopping Clock Method

Clock	Condition Before Stopping Clock (Invalidating External Clock Input)	Setting of CSC Register Flags
X1 clock External main system clock	CPU and peripheral hardware clocks operate with a clock other than the high-speed system clock. (CLS = 0 and MCS = 0, or CLS = 1)	MSTOP = 1
XT1 clock External subsystem clock	CPU and peripheral hardware clocks operate with a clock other than the subsystem clock. (CLS = 0)	XTSTOP = 1
High-speed on-chip oscillator clock	CPU and peripheral hardware clocks operate with a clock other than the high-speed on-chip oscillator clock. (CLS = 0 and MCS = 1, or CLS = 1)	HIOSTOP = 1

6.3.4 Oscillation stabilization time counter status register (OSTC)

This is the register that indicates the count status of the X1 clock oscillation stabilization time counter.

The X1 clock oscillation stabilization time can be checked in the following case,

- If the X1 clock starts oscillation while the high-speed on-chip oscillator clock or subsystem clock is being used as the CPU clock.
- If the STOP mode is entered and then released while the high-speed on-chip oscillator clock is being used as the CPU clock with the X1 clock oscillating.

The OSTC register can be read by a 1-bit or 8-bit memory manipulation instruction.

When reset signal is generated, the STOP instruction and MSTOP (bit 7 of clock operation status control register (CSC)) = 1 clear the OSTC register to 00H.

Remark The oscillation stabilization time counter starts counting in the following cases.
- When oscillation of the X1 clock starts (EXCLK, OSCSEL = 0, 1 → MSTOP = 0)
- When the STOP mode is released

Figure 6-5. Format of Oscillation Stabilization Time Counter Status Register (OSTC)

Address: FFFA2H After reset: 00H R

Symbol	7	6	5	4	3	2	1	0
OSTC	MOST 8	MOST 9	MOST 10	MOST 11	MOST 13	MOST 15	MOST 17	MOST 18

MOST 8	MOST 9	MOST 10	MOST 11	MOST 13	MOST 15	MOST 17	MOST 18	Oscillation stabilization time status		
									f_X = 10 MHz	f_X = 20 MHz
0	0	0	0	0	0	0	0	$2^8/f_X$ max.	25.6 μs max.	12.8 μs max.
1	0	0	0	0	0	0	0	$2^8/f_X$ min.	25.6 μs min.	12.8 μs min.
1	1	0	0	0	0	0	0	$2^9/f_X$ min.	51.2 μs min.	25.6 μs min.
1	1	1	0	0	0	0	0	$2^{10}/f_X$ min.	102 μs min.	51.2 μs min.
1	1	1	1	0	0	0	0	$2^{11}/f_X$ min.	204 μs min.	102 μs min.
1	1	1	1	1	0	0	0	$2^{13}/f_X$ min.	819 μs min.	409 μs min.
1	1	1	1	1	1	0	0	$2^{15}/f_X$ min.	3.27 ms min.	1.63 ms min.
1	1	1	1	1	1	1	0	$2^{17}/f_X$ min.	13.1 ms min.	6.55 ms min.
1	1	1	1	1	1	1	1	$2^{18}/f_X$ min.	26.2 ms min.	13.1 ms min.

Cautions 1. After the above time has elapsed, the bits are set to 1 in order from the MOST8 bit and remain 1.

2. The oscillation stabilization time counter counts up to the oscillation stabilization time set by the oscillation stabilization time select register (OSTS).
In the following cases, set the oscillation stabilization time of the OSTS register to the value greater than the count value which is to be checked by the OSTC register.

- **If the X1 clock starts oscillation while the high-speed on-chip oscillator clock or subsystem clock is being used as the CPU clock.**
- **If the STOP mode is entered and then released while the high-speed on-chip oscillator clock is being used as the CPU clock with the X1 clock oscillating.**
  (Note, therefore, that only the status up to the oscillation stabilization time set by the OSTS register is set to the OSTC register after the STOP mode is released.)

3. The X1 clock oscillation stabilization wait time does not include the time until clock oscillation starts ("a" below).

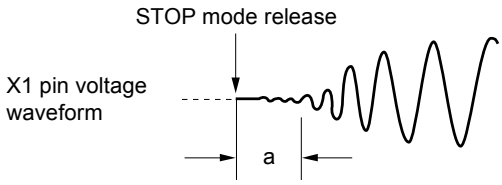

Remark fx: X1 clock oscillation frequency

6.3.5 Oscillation stabilization time select register (OSTS)

This register is used to select the X1 clock oscillation stabilization wait time.

When the X1 clock is made to oscillate by clearing the MSTOP bit to start the X1 oscillation circuit operating, actual operation is automatically delayed for the time set in the OSTS register.

When switching the CPU clock from the high-speed on-chip oscillator clock or the subsystem clock to the X1 clock, and when using the high-speed on-chip oscillator clock for switching the X1 clock from the oscillating state to STOP mode, use the oscillation stabilization time counter status register (OSTC) to confirm that the desired oscillation stabilization time has elapsed after release from the STOP mode. That is, use the OSTC register to check that the oscillation stabilization time corresponding to its setting has been reached.

The OSTS register can be set by an 8-bit memory manipulation instruction.

Reset signal generation sets the OSTS register to 07H.

Figure 6-6. Format of Oscillation Stabilization Time Select Register (OSTS)

Address: FFFA3H After reset: 07H R/W

Symbol	7	6	5	4	3	2	1	0
OSTS	0	0	0	0	0	OSTS2	OSTS1	OSTS0

OSTS2	OSTS1	OSTS0	Oscillation stabilization time selection		
				f_X = 10 MHz	f_X = 20 MHz
0	0	0	$2^8/f_X$	25.6 μs	12.8 μs
0	0	1	$2^9/f_X$	51.2 μs	25.6 μs
0	1	0	$2^{10}/f_X$	102 μs	51.2 μs
0	1	1	$2^{11}/f_X$	204 μs	102 μs
1	0	0	$2^{13}/f_X$	819 μs	409 μs
1	0	1	$2^{15}/f_X$	3.27 ms	1.63 ms
1	1	0	$2^{17}/f_X$	13.1 ms	6.55 ms
1	1	1	$2^{18}/f_X$	26.2 ms	13.1 ms

Cautions 1. Change the setting of the OSTS register before setting the MSTOP bit of the clock operation status control register (CSC) to 0.

2. The oscillation stabilization time counter counts up to the oscillation stabilization time set by the OSTS register.

In the following cases, set the oscillation stabilization time of the OSTS register to the value greater than the count value which is to be checked by the OSTC register after the oscillation starts.

- **If the X1 clock starts oscillation while the high-speed on-chip oscillator clock or subsystem clock is being used as the CPU clock.**
- **If the STOP mode is entered and then released while the high-speed on-chip oscillator clock is being used as the CPU clock with the X1 clock oscillating. (Note, therefore, that only the status up to the oscillation stabilization time set by the OSTS register is set to the OSTC register after the STOP mode is released.)**

3. The X1 clock oscillation stabilization wait time does not include the time until clock oscillation starts ("a" below).

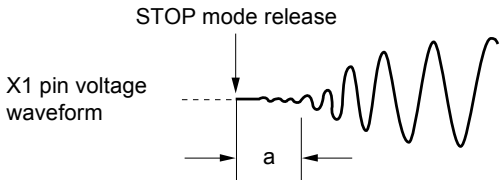

Remark f_X: X1 clock oscillation frequency

6.3.6 Peripheral enable register 0 (PER0)

These registers are used to enable or disable supplying the clock to the peripheral hardware. Clock supply to the hardware that is not used is also stopped so as to decrease the power consumption and noise.

To use the peripheral functions below, which are controlled by this register, set (1) the bit corresponding to each function before specifying the initial settings of the peripheral functions.

- Real-time clock, 12-bit interval timer
- A/D converter
- Serial interface IICA0
- Serial array unit 1
- Serial array unit 0
- Timer array unit 0

The PER0 register can be set by a 1-bit or 8-bit memory manipulation instruction.

Reset signal generation clears these registers to 00H.

Figure 6-7. Format of Peripheral Enable Register 0 (PER0) (1/2)

Address: F00F0H After reset: 00H R/W

Symbol	<7>	6	<5>	<4>	<3>	<2>	1	<0>
PER0	RTCEN	0	ADCEN	IICA0EN	SAU1EN	SAU0EN	0	TAU0EN

RTCEN	Control of real-time clock (RTC) and 12-bit interval timer input clock supply
0	Stops input clock supply. ● SFR used by the real-time clock (RTC) and 12-bit interval timer cannot be written. ● The real-time clock (RTC) and 12-bit interval timer are in the reset status.
1	Enables input clock supply. ● SFR used by the real-time clock (RTC) and 12-bit interval timer can be read and written.

ADCEN	Control of A/D converter input clock supply
0	Stops input clock supply. ● SFR used by the A/D converter cannot be written. ● The A/D converter is in the reset status.
1	Enables input clock supply. ● SFR used by the A/D converter can be read and written.

Caution Be sure to clear bits 1 and 6 to “0”.

Figure 6-7. Format of Peripheral Enable Register 0 (PER0) (2/2)

Address: F00F0H After reset: 00H R/W

Symbol	<7>	6	<5>	<4>	<3>	<2>	1	<0>
PER0	RTCEN	0	ADCEN	IICA0EN	SAU1EN	SAU0EN	0	TAU0EN

IICA0EN	Control of serial interface IICA0 input clock supply
0	Stops input clock supply. ● SFR used by the serial interface IICA0 cannot be written. ● The serial interface IICA0 is in the reset status.
1	Enables input clock supply. ● SFR used by the serial interface IICA0 can be read and written.

SAU1EN	Control of serial array unit 1 input clock supply
0	Stops input clock supply. ● SFR used by the serial array unit 1 cannot be written. ● The serial array unit 1 is in the reset status.
1	Enables input clock supply. ● SFR used by the serial array unit 1 can be read and written.

SAU0EN	Control of serial array unit 0 input clock supply
0	Stops input clock supply. ● SFR used by the serial array unit 0 cannot be written. ● The serial array unit 0 is in the reset status.
1	Enables input clock supply. ● SFR used by the serial array unit 0 can be read and written.

TAU0EN	Control of timer array unit 0 input clock supply
0	Stops input clock supply. ● SFR used by timer array unit 0 cannot be written. ● Timer array unit 0 is in the reset status.
1	Enables input clock supply. ● SFR used by timer array unit 0 can be read and written.

Caution Be sure to clear bits 1 and 6 to “0”

6.3.7 Subsystem clock supply mode control register (OSMC)

This register is used to reduce power consumption by stopping unnecessary clock functions.

If the RTCLPC bit is set to 1, power consumption can be reduced, because clock supply to the peripheral functions, except the real-time clock and 12-bit interval timer, is stopped in STOP mode or HALT mode while subsystem clock is selected as CPU clock.

In addition, the OSMC register can be used to select the count clock of the real-time clock and 12-bit interval timer.

The OSMC register can be set by an 8-bit memory manipulation instruction.

Reset signal generation clears this register to 00H.

Figure 6-8. Format of Subsystem Clock Supply Mode Control Register (OSMC)

Address: F00F3H After reset: 00H R/W

Symbol	7	6	5	4	3	2	1	0
OSMC	RTCLPC	0	0	WUTMMCK0	0	0	0	0

RTCLPC	Setting in STOP mode or HALT mode while subsystem clock is selected as CPU clock
0	Enables supply of subsystem clock to peripheral functions (See **Tables 19-1**, **19-2**, and **19-3** for peripheral functions whose operations are enabled.)
1	Stops supply of subsystem clock to peripheral functions other than real-time clock and 12-bit interval timer.

WUTMMCK0	Selection of count clock for real-time clock and 12-bit interval timer
0	Subsystem clock (f_{SUB})
1	Low-speed on-chip oscillator clock (f_{IL})

6.3.8 High-speed on-chip oscillator frequency select register (HOCODIV)

The frequency of the high-speed on-chip oscillator which is set by an option byte (000C2H) can be changed by using high-speed on-chip oscillator frequency select register (HOCODIV). However, the selectable frequency depends on the FRQSEL3 bit of the option byte (000C2H).

The HOCODIV register can be set by an 8-bit memory manipulation instruction.

Reset signal generation clears this register to the value set by FRQSEL2 to FRQSEL0 of the option byte (000C2H).

Figure 6-9. Format of High-speed On-chip Oscillator Frequency Select Register (HOCODIV)

Address: F00A8H After reset: the value set by FRQSEL2 to FRQSEL0 of the option byte (000C2H) R/W

Symbol	7	6	5	4	3	2	1	0
HOCODIV	0	0	0	0	0	HOCODIV2	HOCODIV1	HOCODIV0

HOCODIV2	HOCODIV1	HOCODIV0	High-speed on-chip oscillator clock frequency	
			FRQSEL3 bit is 0	FRQSEL3 bit is 1
0	0	0	24 MHz	32 MHz
0	0	1	12 MHz	16 MHz
0	1	0	6 MHz	8 MHz
0	1	1	3 MHz	4 MHz
1	0	0	Setting prohibited	2 MHz
1	0	1	Setting prohibited	1 MHz
Other than above			Setting prohibited	

Cautions 1. Set the HOCODIV register within the operable voltage range of the flash operation mode set in the option byte (000C2H) before and after the frequency change.

Option Byte (000C2H) Value		Flash Operation Mode	Operating Frequency Range	Operating Voltage Range
CMODE1	CMODE0			
0	0	LV (low-voltage main) mode	1 MHz to 4 MHz	1.6 V to 3.6 V
1	0	LS (low-speed main) mode	1 MHz to 8 MHz	1.8 V to 3.6 V
1	1	HS (high-speed main) mode	1 MHz to 16 MHz	2.4 V to 3.6 V
			1 MHz to 32 MHz	2.7 V to 3.6 V

2. Set the HOCODIV register with the high-speed on-chip oscillator clock (f_{IH}) selected as the CPU/peripheral hardware clock (f_{CLK}).

3. After the frequency is changed with the HOCODIV register, the frequency is switched after the following transition time has elapsed.

- **Operation for up to three clocks at the pre-change frequency**
- **CPU/peripheral hardware clock wait at the post-change frequency for up to three clocks**

6.3.9 High-speed on-chip oscillator trimming register (HIOTRM)

This register is used to adjust the accuracy of the high-speed on-chip oscillator.

With self-measurement of the high-speed on-chip oscillator frequency via a timer using high-accuracy external clock input (timer array unit), and so on, the accuracy can be adjusted.

The HIOTRM register can be set by an 8-bit memory manipulation instruction.

Caution The frequency will vary if the temperature and V_{DD} pin voltage change after accuracy adjustment. When the temperature and V_{DD} voltage change, accuracy adjustment must be executed regularly or before the frequency accuracy is required.

Figure 6-10. Format of High-Speed On-Chip Oscillator Trimming Register (HIOTRM)

Address: F00A0H After reset: undefined[Note] R/W

Symbol	7	6	5	4	3	2	1	0
HIOTRM	0	0	HIOTRM5	HIOTRM4	HIOTRM3	HIOTRM2	HIOTRM1	HIOTRM0

HIOTRM5	HIOTRM4	HIOTRM3	HIOTRM2	HIOTRM1	HIOTRM0	High-speed on-chip oscillator
0	0	0	0	0	0	Minimum speed
0	0	0	0	0	1	↑
0	0	0	0	1	0	
0	0	0	0	1	1	
0	0	0	1	0	0	
• • •						
1	1	1	1	1	0	↓
1	1	1	1	1	1	Maximum speed

Note The value after reset is the value adjusted at shipment.

Remarks 1. The HIOTRM register can be used to adjust the high-speed on-chip oscillator clock to an accuracy within about 0.05%.

2. For the usage example of the HIOTRM register, see the application note for RL78 MCU series High-speed On-chip Oscillator (HOCO) Clock Frequency Correction (R01AN0464).

6.4 System Clock Oscillator

6.4.1 X1 oscillator

The X1 oscillator oscillates with a crystal resonator or ceramic resonator (1 to 20 MHz) connected to the X1 and X2 pins.

An external clock can also be input. In this case, input the clock signal to the EXCLK pin.

To use the X1 oscillator, set bits 7 and 6 (EXCLK, OSCSEL) of the clock operation mode control register (CMC) as follows.

- Crystal or ceramic oscillation: EXCLK, OSCSEL = 0, 1
- External clock input: EXCLK, OSCSEL = 1, 1

When the X1 oscillator is not used, set the input port mode (EXCLK, OSCSEL = 0, 0).

When the pins are not used as input port pins, either, see **Table 2-3 Connections of Unused Pins**.

Figure 6-11 shows an example of the external circuit of the X1 oscillator.

Figure 6-11. Example of External Circuit of X1 Oscillator

(a) Crystal or ceramic oscillation **(b) External clock**

Cautions are listed on the next page.

6.4.2 XT1 oscillator

The XT1 oscillator oscillates with a crystal resonator (32.768 kHz (typ.) connected to the XT1 and XT2 pins.

To use the XT1 oscillator, set bit 4 (OSCSELS) of the clock operation mode control register (CMC) to 1.

An external clock can also be input. In this case, input the clock signal to the EXCLKS pin.

To use the XT1 oscillator, set bits 5 and 4 (EXCLKS, OSCSELS) of the clock operation mode control register (CMC) as follows.

- Crystal or ceramic oscillation: EXCLKS, OSCSELS = 0, 1
- External clock input: EXCLKS, OSCSELS = 1, 1

When the XT1 oscillator is not used, set the input port mode (EXCLKS, OSCSELS = 0, 0).

When the pins are not used as input port pins, either, see **Table 2-3 Connections of Unused Pins**.

Figure 6-12 shows an example of the external circuit of the XT1 oscillator.

Figure 6-12. Example of External Circuit of XT1 Oscillator

(a) Crystal oscillation **(b) External clock**

Caution **When using the X1 oscillator and XT1 oscillator, wire as follows in the area enclosed by the broken lines in the Figures 6-11 and 6-12 to avoid an adverse effect from wiring capacitance.**

- **Keep the wiring length as short as possible.**
- **Do not cross the wiring with the other signal lines. Do not route the wiring near a signal line through which a high fluctuating current flows.**
- **Always make the ground point of the oscillator capacitor the same potential as V_{SS}. Do not ground the capacitor to a ground pattern through which a high current flows.**
- **Do not fetch signals from the oscillator.**

The XT1 oscillator is a circuit with low amplification in order to achieve low-power consumption. Note the following points when designing the circuit.

- **Pins and circuit boards include parasitic capacitance. Therefore, perform oscillation evaluation using a circuit board to be actually used and confirm that there are no problems.**
- **Before using the ultra-low power consumption oscillation (AMPHS1, AMPHS0 = 1, 0) as the mode of the XT1 oscillator, evaluate the resonators described in 6.7 Resonator and Oscillator Constants.**
- **Make the wiring between the XT1 and XT2 pins and the resonators as short as possible, and minimize the parasitic capacitance and wiring resistance. Note this particularly when the ultra-low power consumption oscillation (AMPHS1, AMPHS0 = 1, 0) is selected.**
- **Configure the circuit of the circuit board, using material with little wiring resistance.**
- **Place a ground pattern that has the same potential as V_{SS} as much as possible near the XT1 oscillator.**
- **Be sure that the signal lines between the XT1 and XT2 pins, and the resonators do not cross with the other signal lines. Do not route the wiring near a signal line through which a high fluctuating current flows.**
- **The impedance between the XT1 and XT2 pins may drop and oscillation may be disturbed due to moisture absorption of the circuit board in a high-humidity environment or dew condensation on the board. When using the circuit board in such an environment, take measures to damp-proof the circuit board, such as by coating.**
- **When coating the circuit board, use material that does not cause capacitance or leakage between the XT1 and XT2 pins.**

Figure 6-13 shows examples of incorrect resonator connection.

Figure 6-13. Examples of Incorrect Resonator Connection (1/2)

(a) Too long wiring

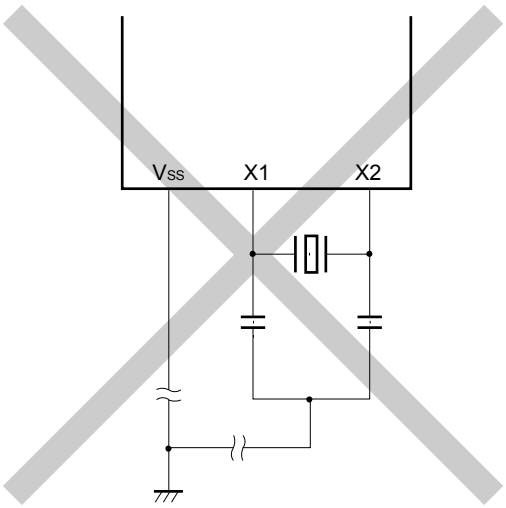

(b) Crossed signal line

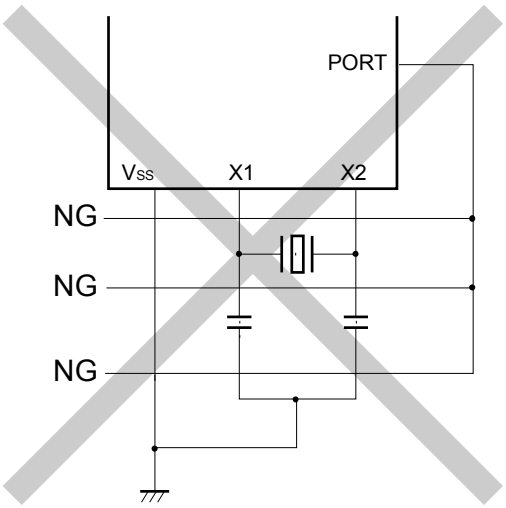

(c) The X1 and X2 signal line wires cross.

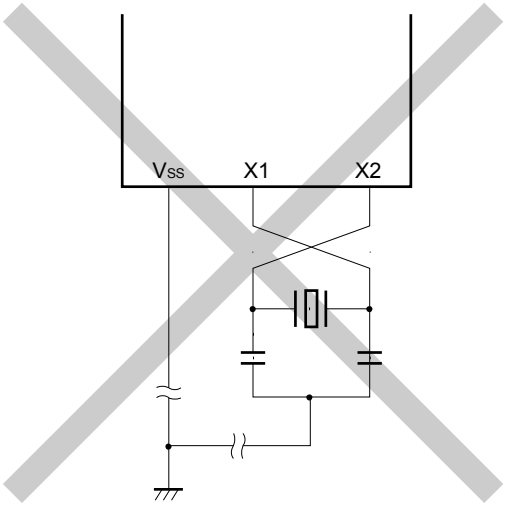

(d) A power supply/GND pattern exists under the X1 and X2 wires.

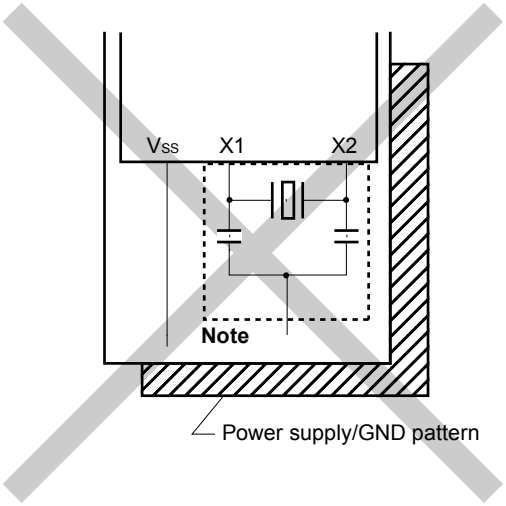

Note Do not place a power supply/GND pattern under the wiring section (section indicated by a broken line in the figure) of the X1 and X2 pins and the resonators in a multi-layer board or double-sided board.
Do not configure a layout that will cause capacitance elements and affect the oscillation characteristics.

Remark When using the subsystem clock, replace X1 and X2 with XT1 and XT2, respectively. Also, insert resistors in series on the XT2 side.

Figure 6-13. Examples of Incorrect Resonator Connection (2/2)

(e) Wiring near high alternating current

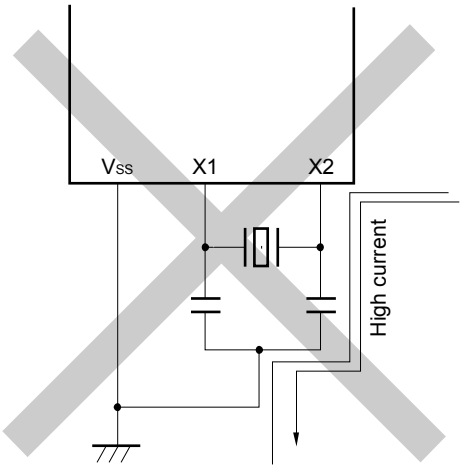

(f) Current flowing through ground line of oscillator (potential at points A, B, and C fluctuates)

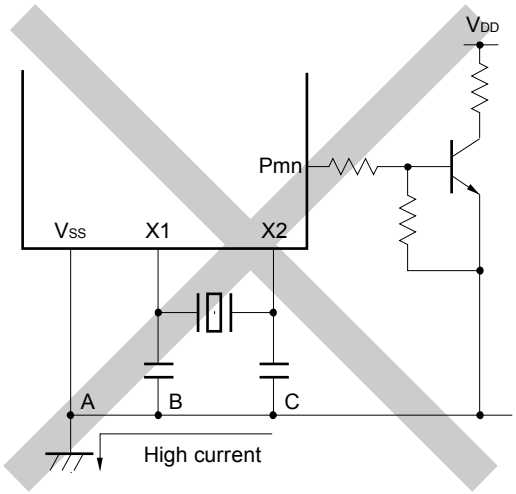

(g) Signals are fetched

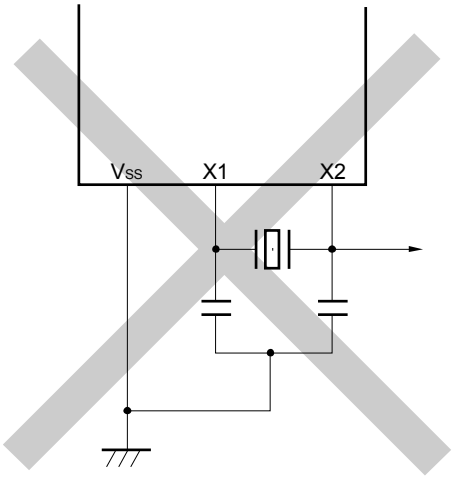

Caution When X2 and XT1 are wired in parallel, the crosstalk noise of X2 may increase with XT1, resulting in malfunctioning.

Remark When using the subsystem clock, replace X1 and X2 with XT1 and XT2, respectively. Also, insert resistors in series on the XT2 side.

6.4.3 High-speed on-chip oscillator

The high-speed on-chip oscillator is incorporated in the RL78/G1D. The frequency can be selected from among 32, 24, 16, 12, 8, 6, 4, 3, 2, or 1 MHz by using the option byte (000C2H). Oscillation can be controlled by bit 0 (HIOSTOP) of the clock operation status control register (CSC). The high-speed on-chip oscillator automatically starts oscillating after reset release.

6.4.4 Low-speed on-chip oscillator

The low-speed on-chip oscillator is incorporated in the RL78/G1D.

The low-speed on-chip oscillator clock is used only as the watchdog timer, real-time clock, and 12-bit interval timer clock. The low-speed on-chip oscillator clock cannot be used as the CPU clock.

<R> The low-speed on-chip oscillator runs while the watchdog timer is operating or when bit 4 (WUTMMCK0) in the subsystem clock supply mode control register (OSMC) is set to 1.

The low-speed on-chip oscillator is stopped when the watchdog timer is stopped and WUTMMCK0 is set to 0.

6.4.5 RF reference clock oscillator

The RF reference clock oscillator is oscillated with the crystal resonator (32 MHz) connected to XTAL1_RF and XTAL2_RF pins. A resister of 6.8 MΩ ± 5% must be inserted between XTAL1_RF pin and GND (AV_{SS_RF} pin) as the following Figure 6-14.

Figure 6-14 shows examples of external circuit of RF reference clock oscillator.

Figure 6-14. Examples of External Circuit of RF reference clock oscillator

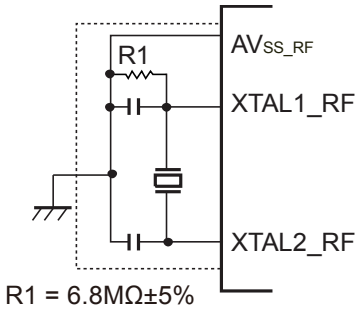

Caution When using the RF reference clock oscillator, wire as follows in the area enclosed by the broken lines in the Figure 6-14 to avoid an adverse effect from wiring capacitance.

- **Keep the wiring length as short as possible.**
- **Do not cross the wiring with the other signal lines. Do not route the wiring near a signal line through which a high fluctuating current flows.**
- **Always make the ground point of the oscillator capacitor the same potential as AV_{SS_RF}. Do not ground the capacitor to a ground pattern through which a high current flows.**
- **Do not fetch signals from the oscillator.**

6.5 Clock Generator Operation

The clock generator generates the following clocks and controls the operation modes of the CPU, such as standby mode (see **Figure 6-1**).

- Main system clock f_{MAIN}
  - High-speed system clock f_{MX}
    - X1 clock f_X
    - External main system clock f_{EX}
  - High-speed on-chip oscillator clock f_{IH}
- Subsystem clock f_{SUB}
  - XT1 clock f_{XT}
  - External subsystem clock f_{EXS}
- Low-speed on-chip oscillator clock f_{IL}
- CPU/peripheral hardware clock f_{CLK}

The CPU starts operation when the high-speed on-chip oscillator starts outputting after a reset release in the RL78/G1D.

When the power supply voltage is turned on, the clock generator operation is shown in **Figure 6-15**.

Figure 6-15. Clock Generator Operation When Power Supply Voltage Is Turned On

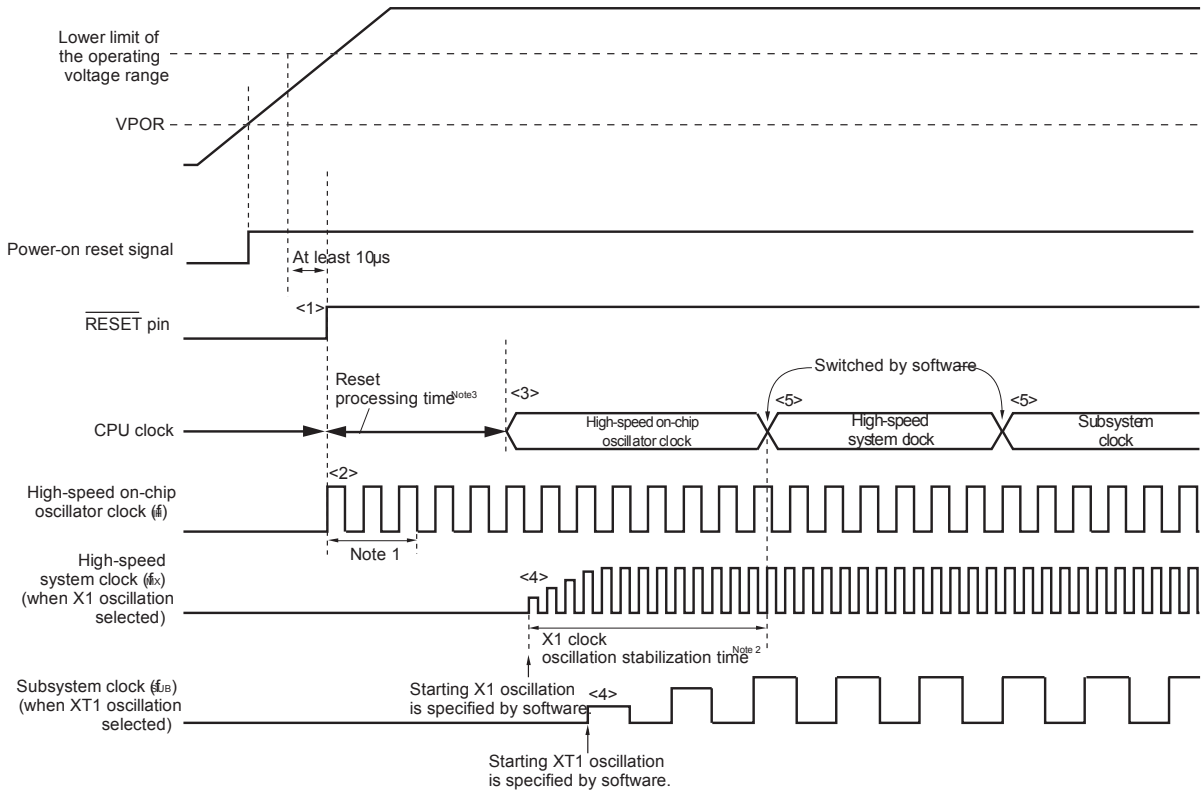

<1> When the power is turned on, an internal reset signal is generated by the power-on-reset (POR) circuit. Note that the reset state is maintained after a reset by the voltage detection circuit or an external reset until the voltage reaches the range of operating voltage described in **30.6 AC Characteristics** (the above figure is an example when the external reset is in use).

<2> When the reset is released, the high-speed on-chip oscillator automatically starts oscillation.

<3> The CPU starts operation on the high-speed on-chip oscillator clock after waiting for the voltage to stabilize and a reset processing have been performed after reset release.

<4> Set the start of oscillation of the X1 or XT1 clock via software (see **6.6.2 Example of setting X1 oscillation clock** and **6.6.3 Example of setting XT1 oscillation clock**).

<5> When switching the CPU clock to the X1 or XT1 clock, wait for the clock oscillation to stabilize, and then set switching via software (see **6.6.2 Example of setting X1 oscillation clock** and **6.6.3 Example of setting XT1 oscillation clock**).

Notes 1. The reset processing time includes the oscillation accuracy stabilization time of the high-speed on-chip oscillator clock.

2. When releasing a reset, confirm the oscillation stabilization time for the X1 clock using the oscillation stabilization time counter status register (OSTC).

3. For the reset processing time, see **CHAPTER 21 POWER-ON-RESET CIRCUIT.**

Caution It is not necessary to wait for the oscillation stabilization time when an external clock input from the EXCLK pin is used.

6.6 Controlling Clock

6.6.1 Example of setting high-speed on-chip oscillator

After a reset release, the CPU/peripheral hardware clock (f_{CLK}) always starts operating with the high-speed on-chip oscillator clock. The frequency of the high-speed on-chip oscillator can be selected from 32, 24, 16, 12, 8, 6, 4, 3, 2, and 1 MHz by using FRQSEL0 to FRQSEL3 of the option byte (000C2H). The frequency can also be changed by the high-speed on-chip oscillator frequency select register (HOCODIV).

[Option byte setting]

Address: 000C2H

Option byte (000C2H)	7	6	5	4	3	2	1	0
	CMODE1 0/1	CMODE0 0/1	1	0	FRQSEL3 0/1	FRQSEL2 0/1	FRQSEL1 0/1	FRQSEL0 0/1

CMODE1	CMODE0	Setting of flash operation mode	
0	0	LV (low voltage main) mode	V_{DD} = 1.6 V to 3.6 V @ 1 MHz to 4 MHz
1	0	LS (low speed main) mode	V_{DD} = 1.8 V to 3.6 V @ 1 MHz to 8 MHz
1	1	HS (high speed main) mode	V_{DD} = 2.4 V to 3.6 V @ 1 MHz to 16 MHz V_{DD} = 2.7 V to 3.6 V @ 1 MHz to 32 MHz
Other than above		Setting prohibited	

FRQSEL3	FRQSEL2	FRQSEL1	FRQSEL0	Frequency of the high-speed on-chip oscillator
1	0	0	0	32 MHz
0	0	0	0	24 MHz
1	0	0	1	16 MHz
0	0	0	1	12 MHz
1	0	1	0	8 MHz
0	0	1	0	6 MHz
1	0	1	1	4 MHz
0	0	1	1	3 MHz
1	1	0	0	2 MHz
1	1	0	1	1 MHz
Other than above				Setting prohibited

[High-speed on-chip oscillator frequency select register (HOCODIV) setting]

Address: F00A8H

	7	6	5	4	3	2	1	0
HOCODIV	0	0	0	0	0	HOCODIV2	HOCODIV1	HOCODIV0

HOCODIV2	HOCODIV1	HOCODIV0	Selection of high-speed on-chip oscillator clock frequency	
			FRQSEL3 bit is 0	FRQSEL3 bit of is 1
0	0	0	24 MHz	32 MHz
0	0	1	12 MHz	16 MHz
0	1	0	6 MHz	8 MHz
0	1	1	3 MHz	4 MHz
1	0	0	Setting prohibited	2 MHz
1	0	1	Setting prohibited	1 MHz
Other than above			Setting prohibited	

6.6.2 Example of setting X1 oscillation clock

After a reset release, the CPU/peripheral hardware clock (f_{CLK}) always starts operating with the high-speed on-chip oscillator clock. To subsequently change the clock to the X1 oscillation clock, set the oscillator and start oscillation by using the oscillation stabilization time select register (OSTS) and clock operation mode control register (CMC) and clock operation status control register (CSC) and wait for oscillation to stabilize by using the oscillation stabilization time counter status register (OSTC). After the oscillation stabilizes, set the X1 oscillation clock to f_{CLK} by using the system clock control register (CKC).

[Register settings] Set the register in the order of <1> to <5> below.

<1> Set (1) the OSCSEL bit of the CMC register, except for the cases where f_X > 10 MHz, in such cases set (1) the AMPH bit, to operate the X1 oscillator.

	7	6	5	4	3	2	1	0
CMC	EXCLK	OSCSEL	EXCLKS	OSCSELS		AMPHS1	AMPHS0	AMPH
	0	1	0	0	0	0	0	0/1

<2> Using the OSTS register, select the oscillation stabilization time of the X1 oscillator at releasing of the STOP mode.
Example: Setting values when a wait of at least 102 μs is set based on a 10 MHz resonator.

	7	6	5	4	3	2	1	0
OSTS						OSTS2	OSTS1	OSTS0
	0	0	0	0	0	0	1	0

<3> Clear (0) the MSTOP bit of the CSC register to start oscillating the X1 oscillator.

	7	6	5	4	3	2	1	0
CSC	MSTOP	XTSTOP						HIOSTOP
	0	1	0	0	0	0	0	0

<4> Use the OSTC register to wait for oscillation of the X1 oscillator to stabilize.
Example: Wait until the bits reach the following values when a wait of at least 102 μs is set based on a 10 MHz resonator.

	7	6	5	4	3	2	1	0
OSTC	MOST8	MOST9	MOST10	MOST11	MOST13	MOST15	MOST17	MOST18
	1	1	1	0	0	0	0	0

<5> Use the MCM0 bit of the CKC register to specify the X1 oscillation clock as the CPU/peripheral hardware clock.

	7	6	5	4	3	2	1	0
CKC	CLS	CSS	MCS	MCM0				
	0	0	0	1	0	0	0	0

Caution Keep the operating voltage within the range that allows operation of the flash memory as set in an option byte (000C2H) before and after changes to the main system clock (f_{MAIN}) by using the system clock control register (CKC).

Option Byte (000C2H) Value		Flash Operation Mode	Operating Frequency Range	Operating Voltage Range
CMODE1	CMODE0			
0	0	LV (low-voltage main) mode	1 MHz to 4 MHz	1.6 V to 3.6 V
1	0	LS (low-speed main) mode	1 MHz to 8 MHz	1.8 V to 3.6 V
1	1	HS (high-speed main) mode	1 MHz to 16 MHz	2.4 V to 3.6 V
			1 MHz to 32 MHz	2.7 V to 3.6 V

6.6.3 Example of setting XT1 oscillation clock

After a reset release, the CPU/peripheral hardware clock (f_{CLK}) always starts operating with the high-speed on-chip oscillator clock. To subsequently change the clock to the XT1 oscillation clock, set the oscillator and start oscillation by using the subsystem clock supply mode control register (OSMC), clock operation mode control register (CMC), and clock operation status control register (CSC), set the XT1 oscillation clock to f_{CLK} by using the system clock control register (CKC).

[Register settings] Set the register in the order of <1> to <5> below.

<1> To run only the real-time clock and 12-bit interval timer on the subsystem clock (ultra-low current consumption) when in the STOP mode or HALT mode in CPU operation with sub-system clock, set the RTCLPC bit to 1.

	7	6	5	4	3	2	1	0
OSMC	RTCLPC 0/1	 0	 0	WUTMMCK0 0	 0	 0	 0	 0

<2> Set (1) the OSCSELS bit of the CMC register to operate the XT1 oscillator.

	7	6	5	4	3	2	1	0
CMC	EXCLK 0	OSCSEL 0	EXCLKS 0	OSCSELS 1	 0	AMPHS1 0/1	AMPHS0 0/1	AMPH 0

AMPHS0 and AMPHS1 bits: These bits are used to specify the oscillation mode of the XT1 oscillator.

<3> Clear (0) the XTSTOP bit of the CSC register to start oscillating the XT1 oscillator.

	7	6	5	4	3	2	1	0
CSC	MSTOP 1	XTSTOP 0	 0	 0	 0	 0	 0	HIOSTOP 0

<4> Use the timer function or another function to wait for oscillation of the subsystem clock to stabilize by using software.

<5> Use the CSS bit of the CKC register to specify the XT1 oscillation clock as the CPU/peripheral hardware clock.

	7	6	5	4	3	2	1	0
CKC	CLS 0	CSS 1	MCS 0	MCM0 0	 0	 0	 0	 0

6.6.4 CPU clock status transition diagram

Figure 6-16 shows the CPU clock status transition diagram of this product.

Figure 6-16. CPU Clock Status Transition Diagram

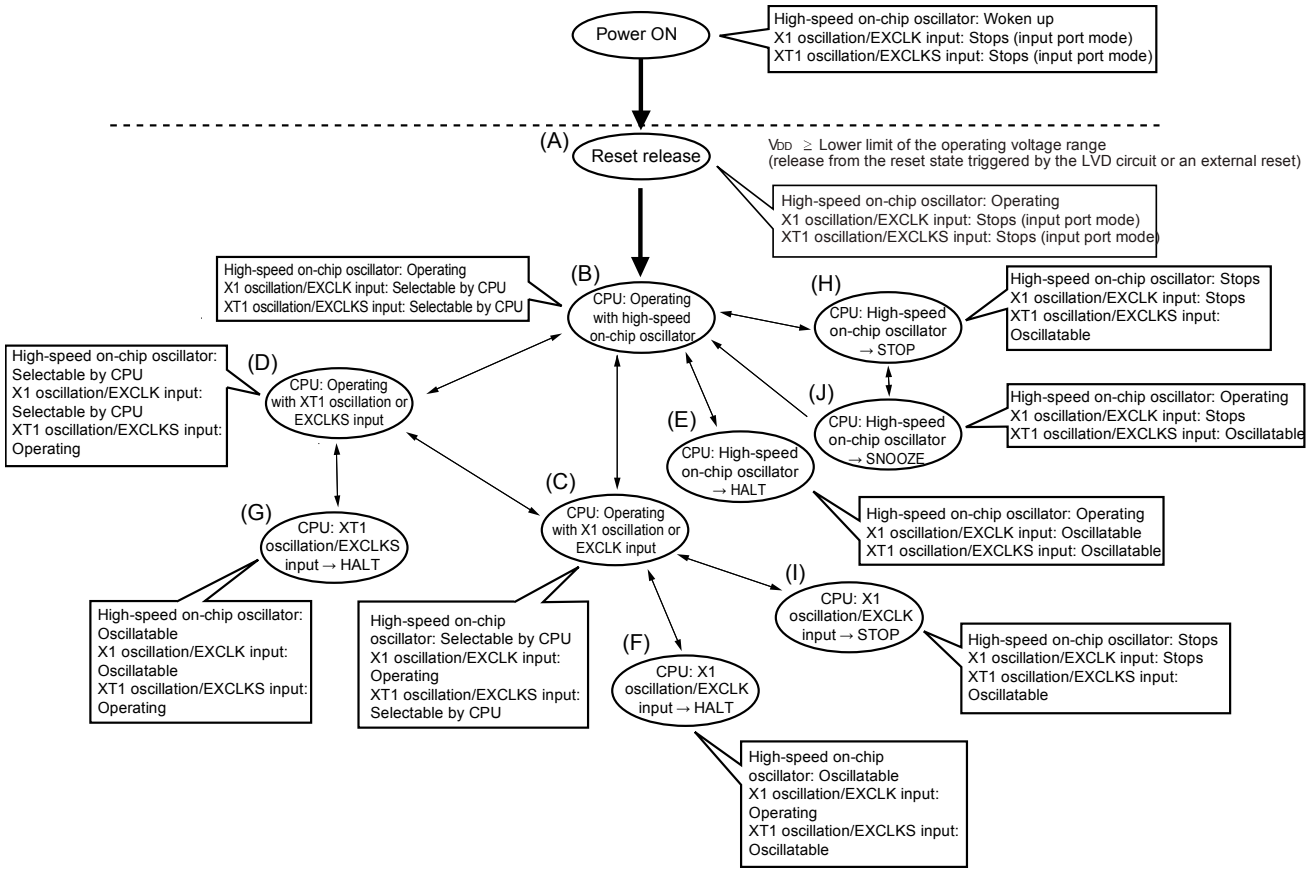

Table 6-3 shows transition of the CPU clock and examples of setting the SFR registers.

Table 6-3. CPU Clock Transition and SFR Register Setting Examples (1/5)

(1) CPU operating with high-speed on-chip oscillator clock (B) after reset release (A)

Status Transition	SFR Register Setting
(A) → (B)	SFR registers do not have to be set (default status after reset release).

(2) CPU operating with high-speed system clock (C) after reset release (A)

(The CPU operates with the high-speed on-chip oscillator clock immediately after a reset release (B).)

(Setting sequence of SFR registers) →

Setting Flag of SFR Register / Status Transition	CMC Register[Note 1]			OSTS Register	CSC Register	OSTC Register	CKC Register
	EXCLK	OSCSEL	AMPH		MSTOP		MCM0
(A) → (B) → (C) (X1 clock: 1 MHz ≤ f_X ≤ 10 MHz)	0	1	0	**Note 2**	0	Must be checked	1
(A) → (B) → (C) (X1 clock: 10 MHz < f_X ≤ 20 MHz)	0	1	1	**Note 2**	0	Must be checked	1
(A) → (B) → (C) (external main clock)	1	1	×	**Note 2**	0	Must not be checked	1

Notes 1. The clock operation mode control register (CMC) can be written only once by an 8-bit memory manipulation instruction after reset release.

2. Set the oscillation stabilization time as follows.

- Desired the oscillation stabilization time counter status register (OSTC) oscillation stabilization time ≤ Oscillation stabilization time set by the oscillation stabilization time select register (OSTS)

Caution Set the clock after the supply voltage has reached the operable voltage of the clock to be set (see CHAPTER 30 ELECTRICAL SPECIFICATIONS).

(3) CPU operating with subsystem clock (D) after reset release (A)

(The CPU operates with the high-speed on-chip oscillator clock immediately after a reset release (B).)

(Setting sequence of SFR registers) →

Setting Flag of SFR Register / Status Transition	CMC Register[Note]				CSC Register	Waiting for Oscillation Stabilization	CKC Register
	EXCLKS	OSCSELS	AMPHS1	AMPHS0	XTSTOP		CSS
(A) → (B) → (D) (XT1 clock)	0	1	0/1	0/1	0	Necessary	1
(A) → (B) → (D) (external sub clock)	1	1	×	×	0	Necessary	1

Note The clock operation mode control register (CMC) can be written only once by an 8-bit memory manipulation instruction after reset release.

Remarks 1. ×: don't care

2. (A) to (J) in Table 6-3 correspond to (A) to (J) in Figure 6-16.

Table 6-3. CPU Clock Transition and SFR Register Setting Examples (2/5)

(4) CPU clock changing from high-speed on-chip oscillator clock (B) to high-speed system clock (C)

(Setting sequence of SFR registers) →

Setting Flag of SFR Register / Status Transition	CMC Register[Note 1]			OSTS Register	CSC Register	OSTC Register	CKC Register
	EXCLK	OSCSEL	AMPH		MSTOP		MCM0
(B) → (C) (X1 clock: 1 MHz ≤ f_X ≤ 10 MHz)	0	1	0	**Note 2**	0	Must be checked	1
(B) → (C) (X1 clock: 10 MHz < f_X ≤ 20 MHz)	0	1	1	**Note 2**	0	Must be checked	1
(B) → (C) (external main clock)	1	1	×	**Note 2**	0	Must not be checked	1

Unnecessary if these registers are already set

Unnecessary if the CPU is operating with the high-speed system clock

Notes 1. The clock operation mode control register (CMC) can be written only once by an 8-bit memory manipulation instruction after reset release. This setting is not necessary if it has already been set.

2. Set the oscillation stabilization time as follows.

- Desired the oscillation stabilization time counter status register (OSTC) oscillation stabilization time ≤ Oscillation stabilization time set by the oscillation stabilization time select register (OSTS)

Caution Set the clock after the supply voltage has reached the operable voltage of the clock to be set (see CHAPTER 30 ELECTRICAL SPECIFICATIONS).

(5) CPU clock changing from high-speed on-chip oscillator clock (B) to subsystem clock (D)

(Setting sequence of SFR registers) →

Setting Flag of SFR Register / Status Transition	CMC Register[Note]			CSC Register	Waiting for Oscillation Stabilization	CKC Register
	EXCLKS	OSCSELS	AMPHS1,0	XTSTOP		CSS
(B) → (D) (XT1 clock)	0	1	00: Low power consumption oscillation 01: Normal oscillation 10: Ultra-low power consumption oscillation	0	Necessary	1
(B) → (D) (external sub clock)	1	1	×	0	Necessary	1

Unnecessary if these registers are already set

Unnecessary if the CPU is operating with the subsystem clock

Note The clock operation mode control register (CMC) can be written only once by an 8-bit memory manipulation instruction after reset release. This setting is not necessary if it has already been set.

Remarks 1. ×: don't care

2. (A) to (J) in Table 6-3 correspond to (A) to (J) in Figure 6-16.

Table 6-3. CPU Clock Transition and SFR Register Setting Examples (3/5)

(6) CPU clock changing from high-speed system clock (C) to high-speed on-chip oscillator clock (B)

(Setting sequence of SFR registers) →

Setting Flag of SFR Register / Status Transition	CSC Register	Oscillation accuracy stabilization time	CKC Register
	HIOSTOP		MCM0
(C) → (B)	0	18 μs to 65 μs	0

Unnecessary if the CPU is operating with the high-speed on-chip oscillator clock

Remark The oscillation accuracy stabilization time changes according to the temperature conditions and the STOP mode period.

(7) CPU clock changing from high-speed system clock (C) to subsystem clock (D)

(Setting sequence of SFR registers) →

Setting Flag of SFR Register / Status Transition	CSC Register	Waiting for Oscillation Stabilization	CKC Register
	XTSTOP		CSS
(C) → (D)	0	Necessary	1

Unnecessary if the CPU is operating with the subsystem clock

(8) CPU clock changing from subsystem clock (D) to high-speed on-chip oscillator clock (B)

(Setting sequence of SFR registers) →

Setting Flag of SFR Register / Status Transition	CSC Register	Oscillation accuracy stabilization time	CKC Register
	HIOSTOP		CSS
(D) → (B)	0	18 μs to 65 μs	0

Unnecessary if the CPU is operating with the high-speed on-chip oscillator clock

Remarks 1. (A) to (J) in Table 6-3 correspond to (A) to (J) in Figure 6-16.

2. The oscillation accuracy stabilization time changes according to the temperature conditions and the STOP mode period.

Table 6-3. CPU Clock Transition and SFR Register Setting Examples (4/5)

(9) CPU clock changing from subsystem clock (D) to high-speed system clock (C)

(Setting sequence of SFR registers) →

Setting Flag of SFR Register / Status Transition	OSTS Register	CSC Register	OSTC Register	CKC Register
		MSTOP		CSS
(D) → (C) (X1 clock: 1 MHz ≤ f_X ≤ 10 MHz)	**Note**	0	Must be checked	0
(D) → (C) (X1 clock: 10 MHz < f_X ≤ 20 MHz)	**Note**	0	Must be checked	0
(D) → (C) (external main clock)	**Note**	0	Must not be checked	0

Unnecessary if the CPU is operating with the high-speed system clock

Note Set the oscillation stabilization time as follows.

- Desired the oscillation stabilization time counter status register (OSTC) oscillation stabilization time ≤ Oscillation stabilization time set by the oscillation stabilization time select register (OSTS)

Caution Set the clock after the supply voltage has reached the operable voltage of the clock to be set (see CHAPTER 30 ELECTRICAL SPECIFICATIONS).

(10) ● HALT mode (E) set while CPU is operating with high-speed on-chip oscillator clock (B)
● HALT mode (F) set while CPU is operating with high-speed system clock (C)
● HALT mode (G) set while CPU is operating with subsystem clock (D)

Status Transition	Setting
(B) → (E) (C) → (F) (D) → (G)	Executing HALT instruction

Remark (A) to (J) in Table 6-3 correspond to (A) to (J) in Figure 6-16.

Table 6-3. CPU Clock Transition and SFR Register Setting Examples (5/5)

(11) ● STOP mode (H) set while CPU is operating with high-speed on-chip oscillator clock (B)
● STOP mode (I) set while CPU is operating with high-speed system clock (C)

(Setting sequence) →

Status Transition		Setting		
(B) → (H)		Stopping peripheral functions that are disabled in STOP mode	–	Executing STOP instruction
(C) → (I)	In X1 oscillation		Sets the OSTS register	
	External main system clock		–	

(12) CPU changing from STOP mode (H) to SNOOZE mode (J)

For details about the setting for switching from the STOP mode to the SNOOZE mode, see **12.8 SNOOZE Mode Function**, **13.5.7 SNOOZE mode function** and **13.6.3 SNOOZE mode function**.

Remark (A) to (J) in Table 6-3 correspond to (A) to (J) in Figure 6-16.

6.6.5 Condition before changing CPU clock and processing after changing CPU clock

Condition before changing the CPU clock and processing after changing the CPU clock are shown below.

Table 6-4. Changing CPU Clock (1/2)

CPU Clock		Condition Before Change	Processing After Change
Before Change	After Change		
High-speed on-chip oscillator clock	X1 clock	Stabilization of X1 oscillation ● OSCSEL = 1, EXCLK = 0, MSTOP = 0 ● After elapse of oscillation stabilization time	After confirmation of switching CPU clock to status before change, operating current can be reduced by stopping high-speed on-chip oscillator (HIOSTOP = 1).
	External main system clock	Enabling input of external clock from the EXCLK pin ● OSCSEL = 1, EXCLK = 1, MSTOP = 0	
	XT1 clock	Stabilization of XT1 oscillation ● OSCSELS = 1, EXCLKS = 0, XTSTOP = 0 ● After elapse of oscillation stabilization time	
	External subsystem clock	Enabling input of external clock from the EXCLKS pin ● OSCSELS = 1, EXCLKS = 1, XTSTOP = 0	
X1 clock	High-speed on-chip oscillator clock	Enabling oscillation of high-speed on-chip oscillator ● HIOSTOP = 0 ● After elapse of oscillation accuracy stabilization time	X1 oscillation can be stopped (MSTOP = 1).
	External main system clock	Transition not possible	–
	XT1 clock	Stabilization of XT1 oscillation ● OSCSELS = 1, EXCLKS = 0, XTSTOP = 0 ● After elapse of oscillation stabilization time	X1 oscillation can be stopped (MSTOP = 1).
	External subsystem clock	Enabling input of external clock from the EXCLKS pin ● OSCSELS = 1, EXCLKS = 1, XTSTOP = 0	X1 oscillation can be stopped (MSTOP = 1).
External main system clock	High-speed on-chip oscillator clock	Enabling oscillation of high-speed on-chip oscillator ● HIOSTOP = 0 ● After elapse of oscillation accuracy stabilization time	External main system clock input can be disabled (MSTOP = 1).
	X1 clock	Transition not possible	–
	XT1 clock	Stabilization of XT1 oscillation ● OSCSELS = 1, EXCLKS = 0, XTSTOP = 0 ● After elapse of oscillation stabilization time	External main system clock input can be disabled (MSTOP = 1).
	External subsystem clock	Enabling input of external clock from the EXCLKS pin ● OSCSELS = 1, EXCLKS = 1, XTSTOP = 0	External main system clock input can be disabled (MSTOP = 1).

Table 6-4. Changing CPU Clock (2/2)

CPU Clock		Condition Before Change	Processing After Change
Before Change	After Change		
XT1 clock	High-speed on-chip oscillator clock	Oscillation of high-speed on-chip oscillator and selection of high-speed on-chip oscillator clock as main system clock ● HIOSTOP = 0, MCS = 0	After confirmation of switching CPU clock to status before change, XT1 oscillation can be stopped (XTSTOP = 1)
	X1 clock	Stabilization of X1 oscillation and selection of high-speed system clock as main system clock ● OSCSEL = 1, EXCLK = 0, MSTOP = 0 ● After elapse of oscillation stabilization time ● MCS = 1	
	External main system clock	Enabling input of external clock from the EXCLK pin and selection of high-speed system clock as main system clock ● OSCSEL = 1, EXCLK = 1, MSTOP = 0 ● MCS = 1	
	External subsystem clock	Transition not possible	–
External subsystem clock	High-speed on-chip oscillator clock	Oscillation of high-speed on-chip oscillator and selection of high-speed on-chip oscillator clock as main system clock ● HIOSTOP = 0, MCS = 0	External subsystem clock input can be disabled (XTSTOP = 1).
	X1 clock	Stabilization of X1 oscillation and selection of high-speed system clock as main system clock ● OSCSEL = 1, EXCLK = 0, MSTOP = 0 ● After elapse of oscillation stabilization time ● MCS = 1	
	External main system clock	Enabling input of external clock from the EXCLK pin and selection of high-speed system clock as main system clock ● OSCSEL = 1, EXCLK = 1, MSTOP = 0 ● MCS = 1	
	XT1 clock	Transition not possible	–

6.6.6 Time required for switchover of CPU clock and system clock

By setting bits 4 and 6 (MCM0, CSS) of the system clock control register (CKC), the CPU clock can be switched (between the main system clock and the subsystem clock), and main system clock can be switched (between the high-speed on-chip oscillator clock and the high-speed system clock).

The actual switchover operation is not performed immediately after rewriting to the CKC register; operation continues on the pre-switchover clock for several clocks (see **Table 6-5** to **Table 6-7**).

Whether the CPU is operating on the main system clock or the subsystem clock can be ascertained using bit 7 (CLS) of the CKC register. Whether the main system clock is operating on the high-speed system clock or high-speed on-chip oscillator clock can be ascertained using bit 5 (MCS) of the CKC register.

When the CPU clock is switched, the peripheral hardware clock is also switched.

Table 6-5. Maximum Time Required for System Clock Switchover

Clock A	Switching directions	Clock B	Remark
f_{IH}	←→	f_{MX}	See **Table 6-6**
f_{MAIN}	←→	f_{SUB}	See **Table 6-7**

Table 6-6. Maximum Number of Clocks Required for f_{IH} ↔ f_{MX}

Set Value Before Switchover		Set Value After Switchover	
MCM0		MCM0	
		0 (f_{MAIN} = f_{IH})	1 (f_{MAIN} = f_{MX})
0 (f_{MAIN} = f_{IH})	$f_{MX} \geq f_{IH}$		2 clock
	$f_{MX} < f_{IH}$		$2f_{IH}/f_{MX}$ clock
1 (f_{MAIN} = f_{MX})	$f_{MX} \geq f_{IH}$	$2f_{MX}/f_{IH}$ clock	
	$f_{MX} < f_{IH}$	2 clock	

Table 6-7. Maximum Number of Clocks Required for f_{MAIN} ↔ f_{SUB}

Set Value Before Switchover	Set Value After Switchover	
CSS	CSS	
	0 (f_{CLK} = f_{MAIN})	1 (f_{CLK} = f_{SUB})
0 (f_{CLK} = f_{MAIN})		$1 + 2f_{MAIN}/f_{SUB}$ clock
1 (f_{CLK} = f_{SUB})	3 clock	

Remarks 1. The number of clocks listed in **Table 6-6** and **Table 6-7** is the number of CPU clocks before switchover.

2. Calculate the number of clocks in **Table 6-6** and **Table 6-7** by removing the decimal portion.

Example When switching the main system clock from the high-speed system clock to the high-speed on-chip oscillator clock (@ oscillation with f_{IH} = 8 MHz, f_{MX} = 10 MHz)

$2f_{MX}/f_{IH}$ = 2 (10/8) = 2.5 → 3 clocks

6.6.7 Conditions before clock oscillation is stopped

The following lists the register flag settings for stopping the clock oscillation (disabling external clock input) and conditions before the clock oscillation is stopped.

The condition before stopping clock must be confirmed before the stopping.

Table 6-8. Conditions Before the Clock Oscillation Is Stopped and Flag Settings

Clock	Conditions Before Clock Oscillation Is Stopped (External Clock Input Disabled)	Flag Settings of SFR Register
High-speed on-chip oscillator clock	MCS = 1 or CLS = 1 (The CPU is operating on a clock other than the high-speed on-chip oscillator clock.)	HIOSTOP = 1
X1 clock	MCS = 0 or CLS = 1 (The CPU is operating on a clock other than the high-speed system clock.)	MSTOP = 1
External main system clock		
XT1 clock	CLS = 0 (The CPU is operating on a clock other than the subsystem clock.)	XTSTOP = 1
External subsystem clock		

6.7 Resonator and Oscillator Constants

The resonators for which the operation is verified and their oscillator constants are shown below.

Cautions 1. The constants for these oscillator circuits are reference values based on specific environments set up for evaluation by the manufacturers. For actual applications, request evaluation by the manufacturer of the oscillator circuit mounted on a board. Furthermore, if you are switching from a different product to this microcontroller, and whenever you change the board, again request evaluation by the manufacturer of the oscillator circuit mounted on the new board.

2. The oscillation voltage and oscillation frequency only indicate the oscillator characteristic. Use the RL78 microcontroller so that the internal operation conditions are within the specifications of the DC and AC characteristics.

3. A resister R1 of 6.8 MΩ ± 5% must be inserted for RF reference clock oscillation.

Figure 6-17. External Oscillation Circuit Example

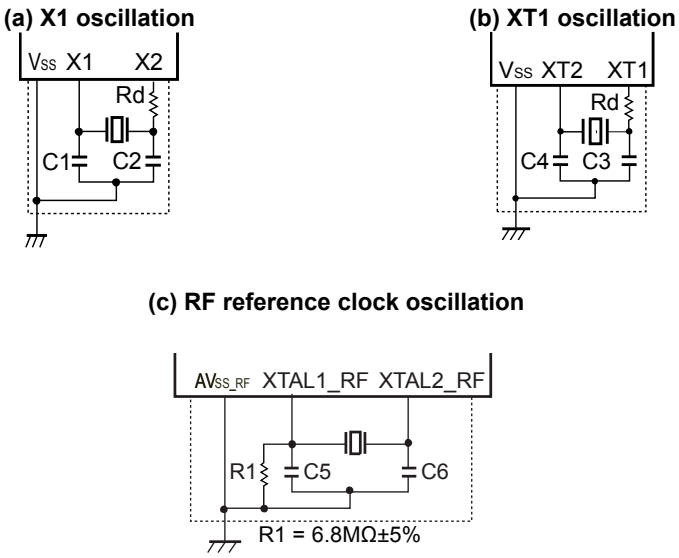

(1) X1 oscillation:

As of April, 2015 (1/2)

Manufacturer	Resonator	Part Number[Note 3]	SMD/ Lead	Frequency (MHz)	Flash operation mode[Note 1]	Recommended Circuit Constants[Note 2] (reference)			Oscillation Voltage Range (V)	
						C1 (pF)	C2 (pF)	Rd (kΩ)	MIN.	MAX.
Murata Manufacturing Co., Ltd.[Note 4]	Ceramic resonator	CSTCC2M00G56-R0	SMD	2.0	LV	(47)	(47)	0	1.6	3.6
		CSTCR4M00G55-R0	SMD	4.0		(39)	(39)	0		
		CSTLS4M00G53-B0	Lead			(15)	(15)	0		
		CSTCC2M00G56-R0	SMD	2.0	LS	(47)	(47)	0	1.8	3.6
		CSTCR4M00G55-R0	SMD	4.0		(39)	(39)	0		
		CSTLS4M00G53-B0	Lead			(15)	(15)	0		
		CSTCR4M19G55-R0	SMD	4.194		(39)	(39)	0		
		CSTLS4M19G53-B0	Lead			(15)	(15)	0		
		CSTCR4M91G53-R0	SMD	4.915		(15)	(15)	0		
		CSTLS4M91G53-B0	Lead			(15)	(15)	0		
		CSTCR5M00G53-R0	SMD	5.0		(15)	(15)	0		
		CSTLS5M00G53-B0	Lead			(15)	(15)	0		
		CSTCR6M00G53-R0	SMD	6.0		(15)	(15)	0		
		CSTLS6M00G53-B0	Lead			(15)	(15)	0		
		CSTCE8M00G52-R0	SMD	8.0		(10)	(10)	0		
		CSTLS8M00G53-B0	Lead			(15)	(15)	0		
		CSTCE8M38G52-R0	SMD	8.388	HS	(10)	(10)	0	2.4	3.6
		CSTLS8M38G53-B0	Lead			(15)	(15)	0		
		CSTCE10M0G52-R0	SMD	10.0		(10)	(10)	0		
		CSTLS10M0G53-B0	Lead			(15)	(15)	0		
		CSTCE12M0G52-R0	SMD	12.0		(10)	(10)	0		
		CSTCE16M0V53-R0	SMD	16.0		(15)	(15)	0		
		CSTLS16M0X51-B0	Lead			(5)	(5)	0		
		CSTCE20M0V51-R0	SMD	20.0		(5)	(5)	0	2.7	3.6
		CSTLS20M0X51-B0	Lead			(5)	(5)	0		

Notes 1. Set the flash operation mode by using CMODE1 and CMODE0 bits of the option byte (000C2H).

2. Values in parentheses in the C1 and C2 columns indicate an internal capacitance.

3. Products supporting 105°C operation have different part numbers. For details, contact Murata Manufacturing Co., Ltd. (http://www.murata.com)

4. When this ocillator is used, contact Murata Manufacturing Co., Ltd. (http://www.murata.com) for details of the matching.

Remark Relationship between operation voltage width, operation frequency of CPU and operation mode is as below.

HS (high-speed main) mode: 2.7 V ≤ V_{DD} ≤ 3.6 V@1 MHz to 32 MHz
2.4 V ≤ V_{DD} ≤ 3.6 V@1 MHz to 16 MHz

LS (low-speed main) mode: 1.8 V ≤ V_{DD} ≤ 3.6 V@1 MHz to 8 MHz

LV (low-voltage main) mode: 1.6 V ≤ V_{DD} ≤ 3.6 V@1 MHz to 4 MHz

As of April, 2015 (2/2)

Manufacturer	Resonator	Part Number[Note 2]	SMD/ Lead	Frequency (MHz)	Flash operation mode[Note 1]	Recommended Circuit Constants (reference)			Oscillation Voltage Range (V)	
						C1 (pF)	C2 (pF)	Rd (kΩ)	MIN.	MAX.
Nihon Dempa Kogyo Co., Ltd.	Crystal resonator	NX8045GB[Note 3]	SMD	8.0	**Note 3**					
		NX5032GA[Note 3]	SMD	16.0						
		NX3225HA[Note 3]	SMD	20.0						
Kyocera Crystal Device Co., Ltd.	Crystal resonator	CX8045GB04000D0PPTZ1[Note 4]	SMD	4.0	LV	12	12	0	1.6	3.6
					LS				1.8	3.6
		CX8045GB04915D0PPTZ1[Note 4]	SMD	4.915	LS	12	12	0	1.8	3.6
		CX8045GB08000D0PPTZ1[Note 4]	SMD	8.0		12	12	0		
		CX8045GB10000D0PPTZ1[Note 4]	SMD	10.0	HS	12	12	0	2.4	3.6
		CX3225GB12000B0PPTZ1[Note 4]	SMD	12.0		5	5	0		
		CX3225GB16000B0PPTZ1[Note 4]	SMD	16.0		5	5	0		
		CX3225SB20000B0PPTZ1[Note 4]	SMD	20.0		5	5	0	2.7	3.6
RIVER ELETEC CORPORATION	Crystal resonator	FCX-03-8.000MHZ-J21140[Note 5]	SMD	8.0	HS	3	3	0	2.4	3.6
		FCX-04C-10.000MHZ-J21139[Note 5]	SMD	10.0		4	4	0		
		FCX-05-12.000MHZ-J21138[Note 5]	SMD	12.0		6	6	0		
		FCX-06-16.000MHZ-J21137[Note 5]	SMD	16.0		4	4	0		

Notes 1. Set the flash operation mode by using CMODE1 and CMODE0 bits of the option byte (000C2H).

2. This resonator supports operation at up to 85°C. Contact crystal oscillator manufacturers with regard to products supporting operation at up to 105°C.

3. When using this resonator, for details about the matching, contact Nihon Dempa Kogyo Co., Ltd (http://www.ndk.com/en).

4. When using this resonator, for details about the matching, contact Kyocera Crystal Device Co., Ltd. (http://www.kyocera-crystal.jp/eng/index.html, http://global.kyocera.com).

5. When using this resonator, for details about the matching, contact RIVER ELETEC CORPORATION (http://www.river-ele.co.jp/english/index.html).

Remark Relationship between operation voltage width, operation frequency of CPU and operation mode is as below.

HS (high-speed main) mode: 2.7 V ≤ V_{DD} ≤ 3.6 V@1 MHz to 32 MHz
2.4 V ≤ V_{DD} ≤ 3.6 V@1 MHz to 16 MHz

LS (low-speed main) mode: 1.8 V ≤ V_{DD} ≤ 3.6 V@1 MHz to 8 MHz

LV (low-voltage main) mode: 1.6 V ≤ V_{DD} ≤ 3.6 V@1 MHz to 4 MHz

(2) XT1 oscillation: Crystal resonator

As of April, 2015

Manufacturer	Part Number[Note 2]	SMD/ Lead	Frequency (kHz)	Load Capacitance CL (pF)	XT1 oscillation mode[Note 1]	Recommended Circuit Constants			Oscillation Voltage Range	
						C3 (pF)	C4 (pF)	Rd (kΩ)	MIN. (V)	MAX. (V)
Seiko Instruments Inc.	SSP-T7-F[Note 3]	SMD	32.768	7	Normal oscillation	11	11	0	1.6	3.6
	SSP-T7-FL[Note 3]			6		9	9	0		
				6	Low power consumption oscillation	9	9	0		
				4.4		6	5	0		
				4.4	Ultra-low power consumption oscillation	6	5	0		
				3.7		4	4	0		
	VT-200-FL[Note 3]	Lead		6	Normal oscillation	9	9	0		
				6	Low power consumption oscillation	9	9	0		
				4.4		6	5	0		
				4.4	Ultra-low power consumption oscillation	6	5	0		
				3.7		4	4	0		
Nihon Dempa Kogyo Co., Ltd.	NX3215SA[Note 4]	SMD	32.768	6	Normal oscillation	7	7	0	1.6	3.6
					Low power consumption oscillation					
					Ultra-low power consumption oscillation					
	NX2012SA[Note 4]	SMD	32.768	6	Normal oscillation	7	7	0		
					Low power consumption oscillation					
					Ultra-low power consumption oscillation					
Kyocera Crystal Device Co., Ltd.	ST3215SB[Note 5]	SMD	32.768	7	Normal oscillation	10	10	0	1.6	3.6
					Low power consumption oscillation					
					Ultra-low power consumption oscillation					
RIVER ELETEC CORPORATION	TFX-02-32.768KHZ-J20986[Note 6]	SMD	32.768	9	Normal oscillation	12	10	0	1.6	3.6
					Low power consumption oscillation					
	TFX-03-32.768KHZ-J13375[Note 6]	SMD	32.768	7	Normal oscillation	12	10	0	1.6	3.6

Notes 1. Set the XT1 oscillation mode by using AMPHS0 and AMPHS1 bits of the clock operation mode control register (CMC).

2. This resonator supports operation at up to 85°C.

3. This oscillator is a low-power-consumption product. When using it, for details about the matching, contact Seiko Instruments Inc., Ltd (http://www.sii.co.jp/components/quartz/topEN.jsp).

4. When using this resonator, for details about the matching, contact Nihon Dempa Kogyo Co., Ltd (http://www.ndk.com/en).

5. When using this resonator, for details about the matching, contact Kyocera Crystal Device Co., Ltd. (http://www.kyocera-crystal.jp/eng/index.html, http://global.kyocera.com).

6. When using this resonator, for details about the matching, contact RIVER ELETEC CORPORATION (http://www.river-ele.co.jp/english/index.html).

(3) RF reference clock oscillation: Crystal resonator

Manufacturer	Part Number	SMD/Lead	Frequency (MHz)	Load Capacitance CL (pF)	Recommended Circuit Constants (reference)		Oscillation Voltage Range (V)	
					C5(pF)	C6(pF)	MIN.	MAX.
Nihon Dempa Kogyo Co., Ltd.	NX1612SA-32.000M HZ-CHP-CIS-3[Note]	SMD	32.00	6	8	9	1.6	3.6

Note When using this resonator, for details about the matching, contact Nihon Dempa Kogyo Co., Ltd (http://www.ndk.com/en).

CHAPTER 7 TIMER ARRAY UNIT

The timer array unit has eight 16-bit timers.

Each 16-bit timer is called a channel and can be used as an independent timer. In addition, two or more “channels” can be used to create a high-accuracy timer. The RL78/G1D has 8 channels (channels 0 to 7) in unit 0.

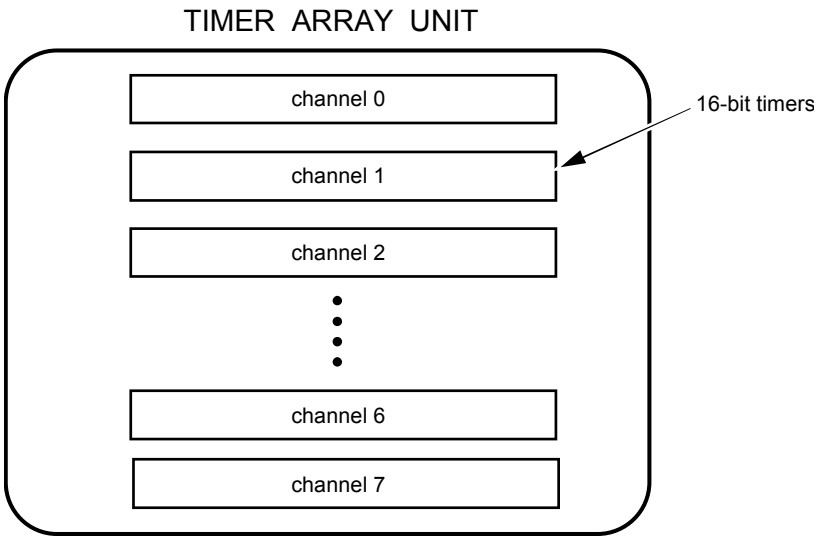

For details about each function, see the table below.

Independent channel operation function	Simultaneous channel operation function
● Interval timer (→ refer to **7.8.1**) ● Square wave output (→ refer to **7.8.1**) ● External event counter (→ refer to **7.8.2**) ● Divider[Note] (→ refer to **7.8.3**) ● Input pulse interval measurement (→ refer to **7.8.4**) ● Measurement of high-/low-level width of input signal (→ refer to **7.8.5**) ● Delay counter (→ refer to **7.8.3**)	● One-shot pulse output (→ refer to **7.9.1**) ● PWM output (→ refer to **7.9.2**) ● Multiple PWM output (→ refer to **7.9.3**)

Note Only channel 0 of unit 0.

It is possible to use the 16-bit timer of channels 1 and 3 of the unit 0 as two 8-bit timers (higher and lower). The functions that can use channels 1 and 3 as 8-bit timers are as follows:

- Interval timer (upper or lower 8-bit timer)/square wave output (lower 8-bit timer only)
- External event counter (lower 8-bit timer only)
- Delay counter (lower 8-bit timer only)

7.1 Functions of Timer Array Unit

Timer array unit has the following functions.

7.1.1 Independent channel operation function

By operating a channel independently, it can be used for the following purposes without being affected by the operation mode of other channels.

(1) Interval timer

Each timer of a unit can be used as a reference timer that generates an interrupt (INTTMmn) at fixed intervals.

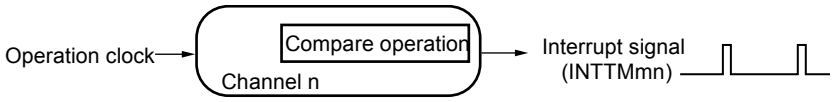

(2) Square wave output

A toggle operation is performed each time INTTMmn interrupt is generated and a square wave with a duty factor of 50% is output from a timer output pin (TOmn).

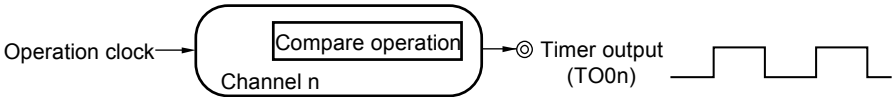

(3) External event counter

Each timer of a unit can be used as an event counter that generates an interrupt when the number of the valid edges of a signal input to the timer input pin (TImn) has reached a specific value.

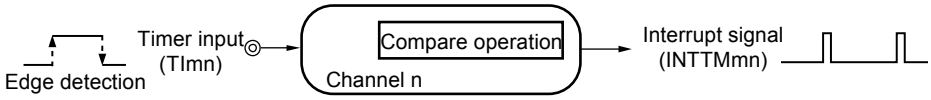

(4) Divider function (channel 0 only)

A clock input from a timer input pin (TI00) is divided and output from an output pin (TO00).

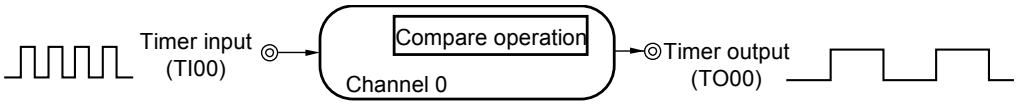

(5) Input pulse interval measurement

Counting is started by the valid edge of a pulse signal input to a timer input pin (TImn). The count value of the timer is captured at the valid edge of the next pulse. In this way, the interval of the input pulse can be measured.

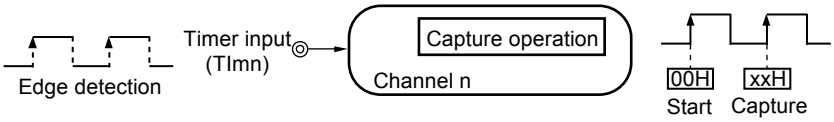

(**Remarks** are listed on the next page.)

(6) Measurement of high-/low-level width of input signal

Counting is started by a single edge of the signal input to the timer input pin (TImn), and the count value is captured at the other edge. In this way, the high-level or low-level width of the input signal can be measured.

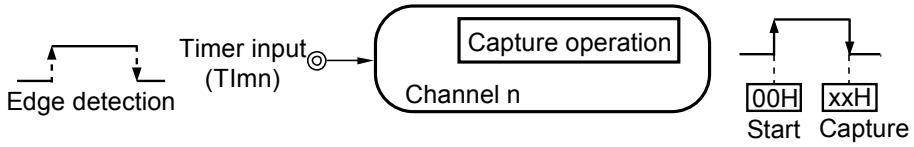

(7) Delay counter

Counting is started at the valid edge of the signal input to the timer input pin (TImn), and an interrupt is generated after any delay period.

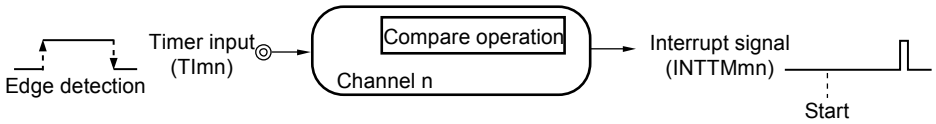

Remark m: Unit number (m = 0), n: Channel number (n = 0 to 7)

7.1.2 Simultaneous channel operation function

By using the combination of a master channel (a reference timer mainly controlling the cycle) and slave channels (timers operating according to the master channel), channels can be used for the following purposes.

(1) One-shot pulse output

Two channels are used as a set to generate a one-shot pulse with a specified output timing and a specified pulse width.

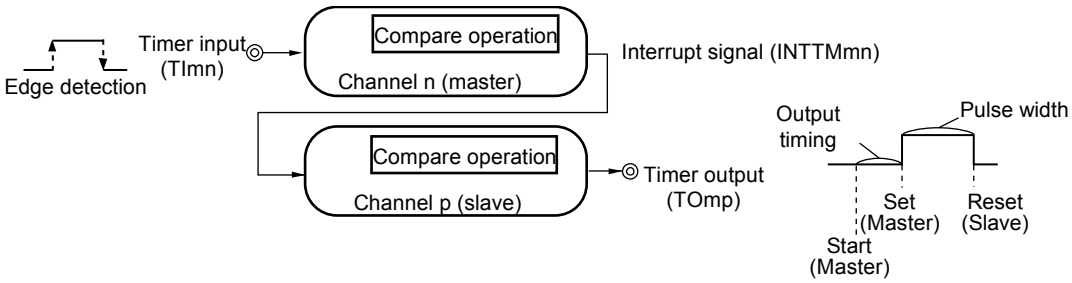

(2) PWM (Pulse Width Modulation) output

Two channels are used as a set to generate a pulse with a specified period and a specified duty factor.

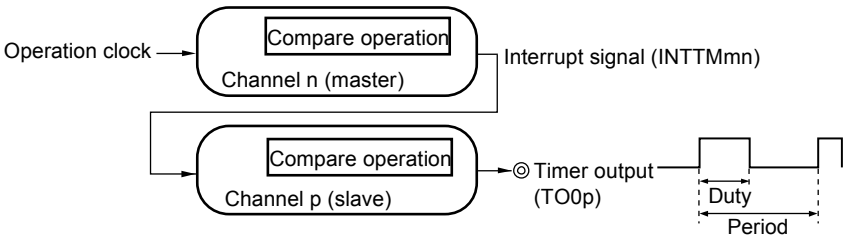

(**Caution** is listed on the next page.)

(3) Multiple PWM (Pulse Width Modulation) output

By extending the PWM function and using one master channel and two or more slave channels, up to seven types of PWM signals that have a specific period and a specified duty factor can be generated.

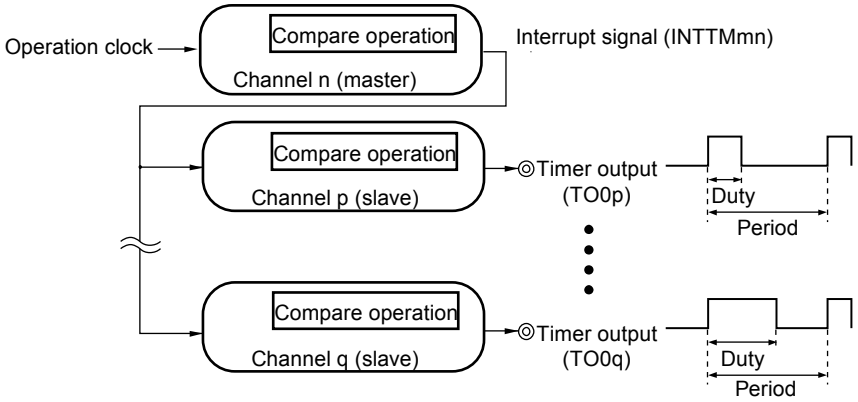

Caution For details about the rules of simultaneous channel operation function, see 7.4.1 Basic rules of simultaneous channel operation function.

Remark m: Unit number (m = 0), n: Channel number (n = 0 to 7),
p, q: Slave channel number (n < p < q ≤ 7)

7.1.3 8-bit timer operation function (channel 1 and 3 only)

The 8-bit timer operation function makes it possible to use a 16-bit timer channel in a configuration consisting of two 8-bit timer channels. This function can only be used for channel 1.

Caution There are several rules for using 8-bit timer operation function.
For details, see 7.4.2 Basic rules of 8-bit timer operation function (channels 1 and 3 only).

7.2 Configuration of Timer Array Unit

Timer array unit includes the following hardware.

Table 7-1. Configuration of Timer Array Unit

Item	Configuration
Timer/counter	Timer count register mn (TCRmn)
Register	Timer data register mn (TDRmn)
Timer input	TI00 to TI07 pins
Timer output	TO00 to TO07 pins, output controller
Control registers	<Registers of unit setting block> ● Peripheral enable register 0 (PER0) ● Timer clock select register m (TPSm) ● Timer channel enable status register m (TEm) ● Timer channel start register m (TSm) ● Timer channel stop register m (TTm) ● Timer input select register 0 (TIS0) ● Timer output enable register 0 (TOE0) ● Timer output register 0 (TO0) ● Timer output level register 0 (TOL0) ● Timer output mode register 0 (TOM0)
	<Registers of each channel> ● Timer mode register mn (TMRmn) ● Timer status register mn (TSRmn) ● Noise filter enable register 1 (NFEN1) ● Port mode register (PM1x) ● Port register (P1x)

Note The port mode registers (PMxx) and port registers (Pxx) to be set differ depending on the product. For details, see **5.5.3 Register setting examples for used port and alternate functions.**

Remark m: Unit number (m = 0), n: Channel number (n = 0 to 7)

Table 7-2. Timer I/O Pins provided in Each Product

Timer array unit channels		I/O Pins of Each Product
Unit 0	Channel 0	P00/TI00, P01/TO00
	Channel 1	P16/TI01/TO01
	Channel 2	P15/(TI02/TO02)
	Channel 3	P14/(TI03/TO03)
	Channel 4	P13/(TI04/TO04)
	Channel 5	P12/(TI05/TO05)
	Channel 6	P11/(TI06/TO06)
	Channel 7	P10/(TI07/TO07)

Remarks 1. When timer input and timer output are shared by the same pin, either only timer input or only timer output can be used.

2. “( )” indicates an alternate port when the bit 0 of the peripheral I/O redirection register (PIOR) is set to “1”.

Figure 7-1 shows the block diagrams of the timer array unit.

Figure 7-1. Entire Configuration of Timer Array Unit 0

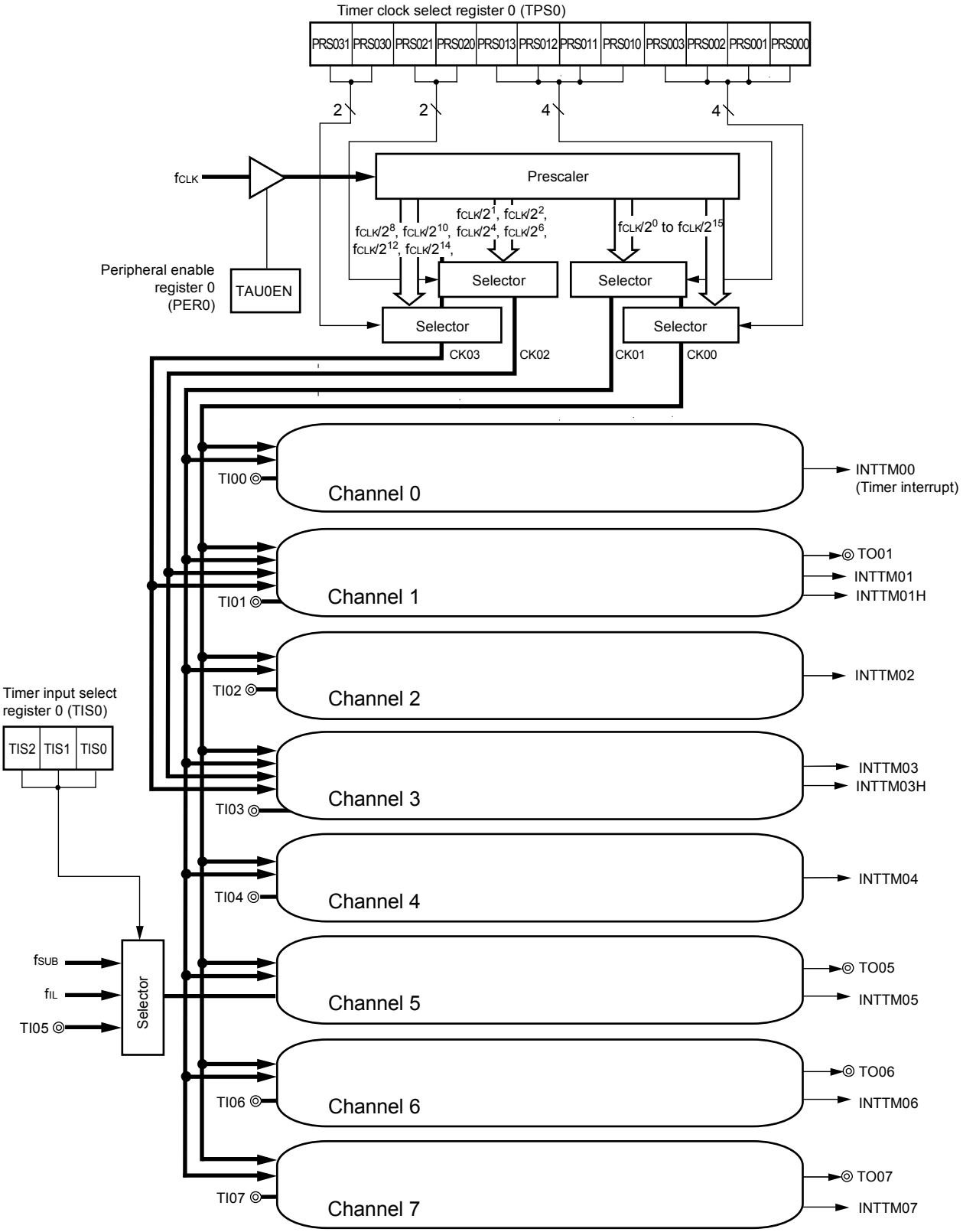

Remark f_{SUB}: Subsystem clock frequency

f_{IL}: Low-speed on-chip oscillator clock frequency

Figure 7-2. Internal Block Diagram of Channels 0, 2, 4, 6 of Timer Array Unit 0

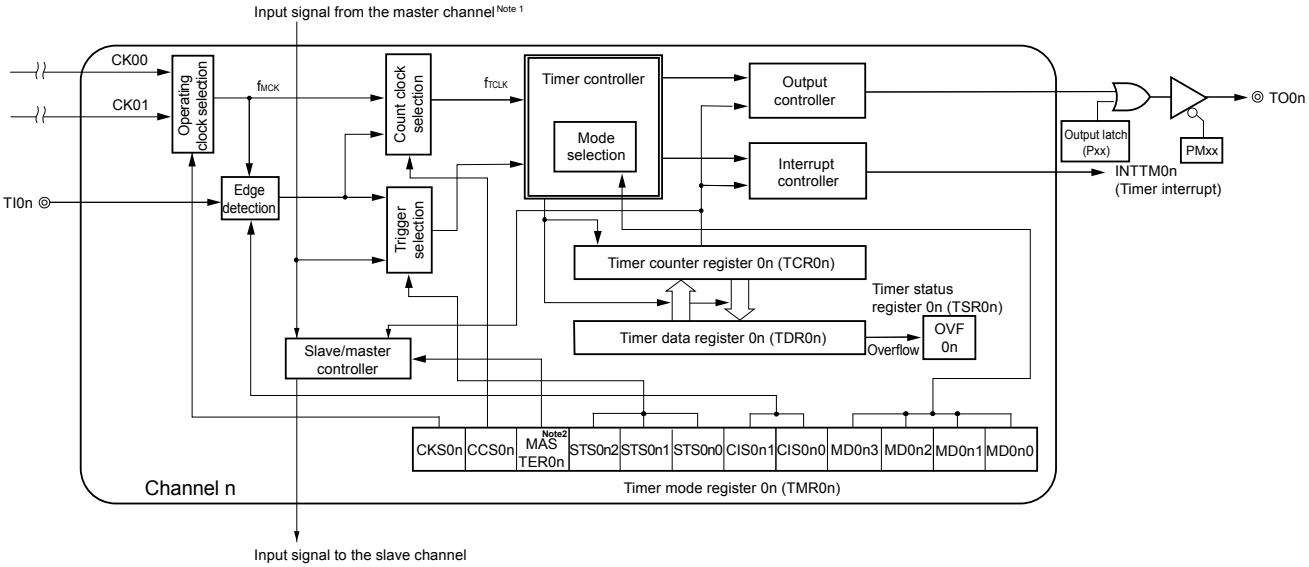

Notes 1. Channels = 2, 4, 6 only

2. n = 2, 4, 6 only

Remark n = 0, 2, 4, 6

Figure 7-3. Internal Block Diagram of Channel 1 and 3 of Timer Array Unit 0

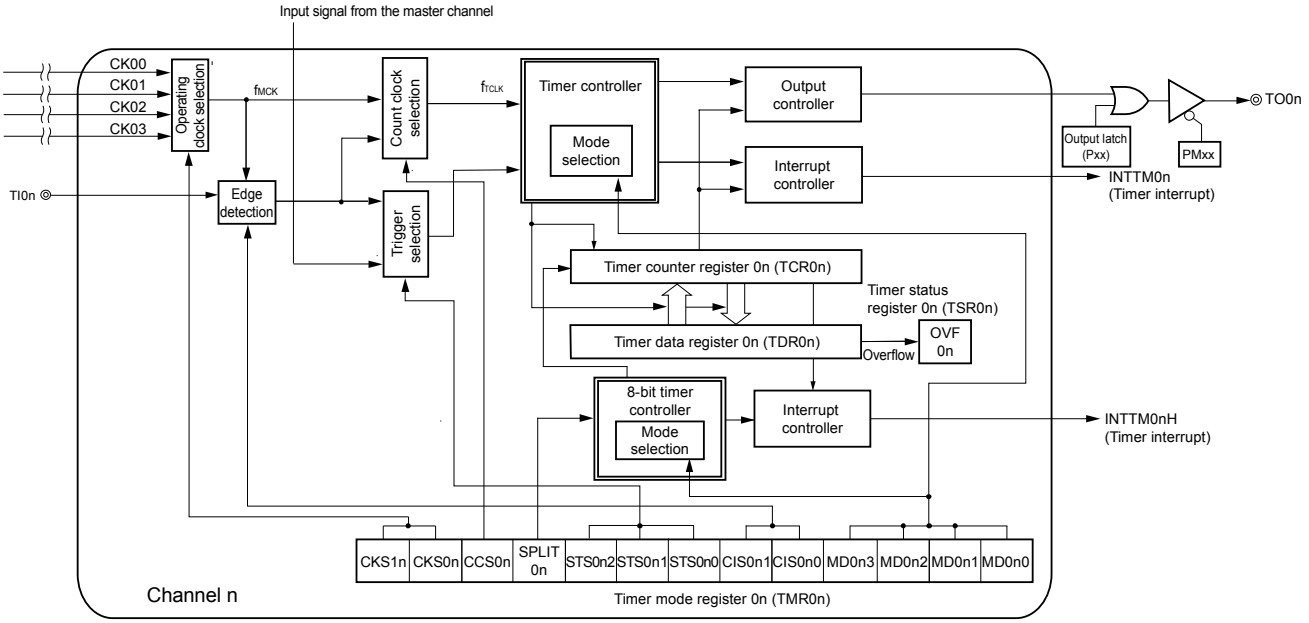

Remark n = 1, 3

Figure 7-4. Internal Block Diagram of Channel 5 of Timer Array Unit 0

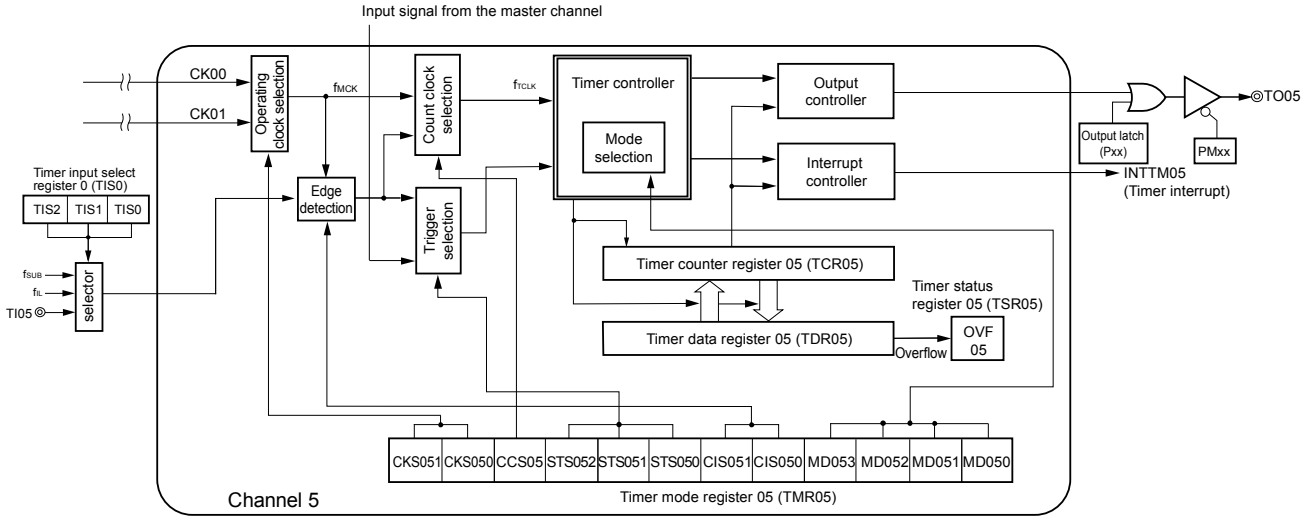

Figure 7-5. Internal Block Diagram of Channel 7 of Timer Array Unit 0

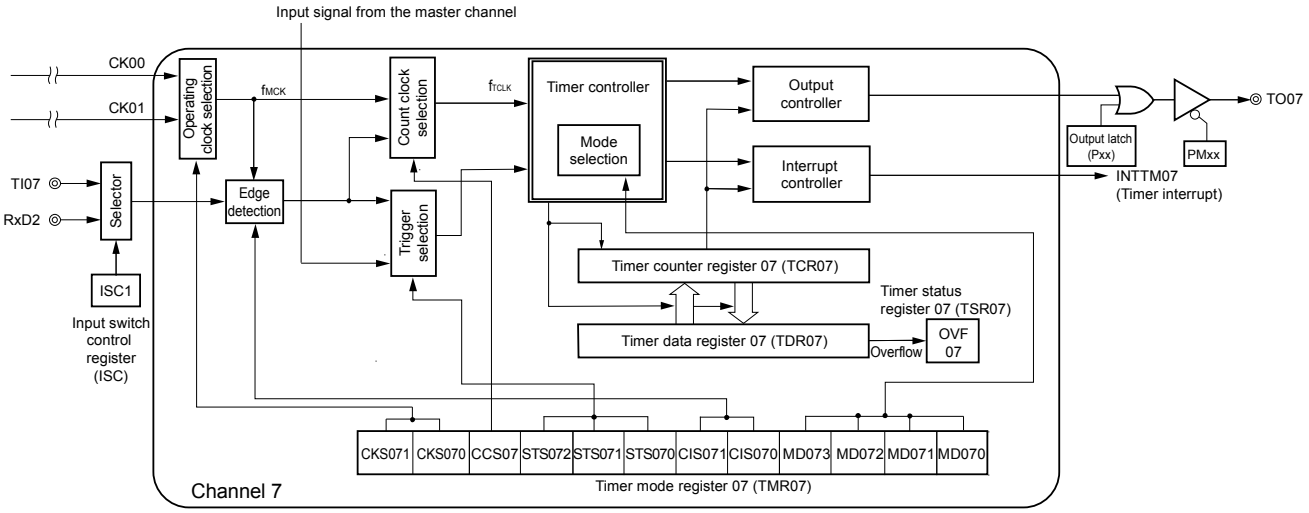

7.2.1 Timer count register mn (TCRmn)

The TCRmn register is a 16-bit read-only register and is used to count clocks.

The value of this counter is incremented or decremented in synchronization with the rising edge of a count clock.

Whether the counter is incremented or decremented depends on the operation mode that is selected by the MDmn3 to MDmn0 bits of timer mode register mn (TMRmn) (refer to **7.3.3 Timer mode register mn (TMRmn)**).

Figure 7-6. Format of Timer Count Register mn (TCRmn)

Address: F0180H, F0181H (TCR00) to F018EH, F018FH (TCR07), After reset: FFFFH R

	F0181H (TCR00)								F0180H (TCR00)							
	15	14	13	12	11	10	9	8	7	6	5	4	3	2	1	0
TCRmn																

Remark m: Unit number (m = 0), n: Channel number (n = 0 to 7)

The count value can be read by reading timer count register mn (TCRmn).

The count value is set to FFFFH in the following cases.

- When the reset signal is generated
- When the TAUmEN bit of peripheral enable register 0 (PER0) is cleared
- When counting of the slave channel has been completed in the delay count mode
- When counting of the master/slave channel has been completed in the one-shot pulse output mode

The count value is cleared to 0000H in the following cases.

- When the start trigger is input in the capture mode
- When capturing has been completed in the capture mode

Caution The count value is not captured to timer data register mn (TDRmn) even when the TCRmn register is read.

The TCRmn register read value differs as follows according to operation mode changes and the operating status.

Table 7-3. Timer Count Register mn (TCRmn) Read Value in Various Operation Modes

Operation Mode	Count Mode	Timer count register mn (TCRmn) Read Value[Note]			
		Value if the operation mode was changed after releasing reset	Value if the Operation was restarted after count operation paused (TTmn = 1)	Value if the operation mode was changed after count operation paused (TTmn = 1)	Value when waiting for a start trigger after one count
Interval timer mode	Count down	FFFFH	Value if stop	Undefined	–
Capture mode	Count up	0000H	Value if stop	Undefined	–
Event counter mode	Count down	FFFFH	Value if stop	Undefined	–
One-count mode	Count down	FFFFH	Value if stop	Undefined	FFFFH
Capture & one-count mode	Count up	0000H	Value if stop	Undefined	Capture value of TDRmn register + 1

Note This indicates the value read from the TCRmn register when channel n has stopped operating as a timer (TEmn = 0) and has been enabled to operate as a counter (TSmn = 1). The read value is held in the TCRmn register until the count operation starts.

Remark m: Unit number (m = 0), n: Channel number (n = 0 to 7)

7.2.2 Timer data register mn (TDRmn)

This is a 16-bit register from which a capture function and a compare function can be selected.

The capture or compare function can be switched by selecting an operation mode by using the MDmn3 to MDmn0 bits of timer mode register mn (TMRmn).

The value of the TDRmn register can be changed at any time.

This register can be read or written in 16-bit units.

In addition, for the TDRm1 and TDRm3 registers, while in the 8-bit timer mode (when the SPLIT bits of timer mode registers m1 and m3 (TMRm1, TMRm3) are 1), it is possible to read and write the data in 8-bit units, with TDRm1H and TDRm3H used as the higher 8 bits, and TDRm1L and TDRm3L used as the lower 8 bits.

Reset signal generation clears this register to 0000H.

Figure 7-7. Format of Timer Data Register mn (TDRmn) (n = 0, 2, 4 to 7)

Address: FFF18H, FFF19H (TDR00), FFF64H, FFF65H (TDR02), FFF68H, FFF69H (TDR04) to FFF6EH, FFF6FH (TDR07) After reset: 0000H R/W

	FFF19H (TDR00)								FFF18H (TDR00)							
	15	14	13	12	11	10	9	8	7	6	5	4	3	2	1	0
TDRmn																

Figure 7-8. Format of Timer Data Register mn (TDRmn) (n = 1, 3)

Address: FFF1AH, FFF1BH (TDR01), FFF66H, FFF67H (TDR03) After reset: 0000H R/W

	FFF1BH (TDR01H)								FFF1AH (TDR01L)							
	15	14	13	12	11	10	9	8	7	6	5	4	3	2	1	0
TDRmn																

(i) When timer data register mn (TDRmn) is used as compare register

Counting down is started from the value set to the TDRmn register. When the count value reaches 0000H, an interrupt signal (INTTMmn) is generated. The TDRmn register holds its value until it is rewritten.

Caution The TDRmn register does not perform a capture operation even if a capture trigger is input, when it is set to the compare function.

(ii) When timer data register mn (TDRmn) is used as capture register

The count value of timer count register mn (TCRmn) is captured to the TDRmn register when the capture trigger is input.

A valid edge of the TImn pin can be selected as the capture trigger. This selection is made by timer mode register mn (TMRmn).

Remark m: Unit number (m = 0), n: Channel number (n = 0 to 7)

7.3 Registers Controlling Timer Array Unit

Timer array unit is controlled by the following registers.

- Peripheral enable register 0 (PER0)
- Timer clock select register m (TPSm)
- Timer mode register mn (TMRmn)
- Timer status register mn (TSRmn)
- Timer channel enable status register m (TEm)
- Timer channel start register m (TSm)
- Timer channel stop register m (TTm)
- Timer input select register 0 (TIS0)
- Timer output enable register 0 (TOE0)
- Timer output register 0 (TO0)
- Timer output level register 0 (TOL0)
- Timer output mode register 0 (TOM0)
- Noise filter enable register 1 (NFEN1)
- Port mode register (PM1x)
- Port register (P1x)

Caution Be sure to set bits that are not mounted to their initial values.

Remark m: Unit number (m = 0), n: Channel number (n = 0 to 7)

7.3.1 Peripheral enable register 0 (PER0)

This registers is used to enable or disable supplying the clock to the peripheral hardware. Clock supply to a hardware macro that is not used is stopped in order to reduce the power consumption and noise.

When the timer array unit 0 is used, be sure to set bit 0 (TAU0EN) of this register to 1.

The PER0 register can be set by a 1-bit or 8-bit memory manipulation instruction.

Reset signal generation clears this register to 00H.

Figure 7-9. Format of Peripheral Enable Register 0 (PER0)

Address: F00F0H After reset: 00H R/W

Symbol	<7>	6	<5>	<4>	<3>	<2>	1	<0>
PER0	RTCEN	0	ADCEN	IICA0EN	SAU1EN	SAU0EN	0	TAU0EN

TAU0EN	Control of timer array 0 unit input clock
0	Stops supply of input clock. ● SFR used by the timer array unit 0 cannot be written. ● The timer array unit 0 is in the reset status.
1	Supplies input clock. ● SFR used by the timer array unit 0 can be read/written.

Cautions 1. When setting the timer array unit, be sure to set the following registers first while the TAUmEN bit is set to 1. If TAUmEN = 0, the values of the registers which control the timer array unit are cleared to their initial values and writing to them is ignored (except for timer input select register 0 (TIS0), input switch control register (ISC), noise filter enable register 1 (NFEN1), port mode register 1 (PM1), port register 1 (P1)).

- **Timer clock select register m (TPSm)**
- **Timer mode register mn (TMRmn)**
- **Timer status register mn (TSRmn)**
- **Timer channel enable status register m (TEm)**
- **Timer channel start register m (TSm)**
- **Timer channel stop register m (TTm)**
- **Timer output enable register m (TOEm)**
- **Timer output register m (TOm)**
- **Timer output level register m (TOLm)**
- **Timer output mode register m (TOMm)**

2. Be sure to clear the bits 1 and 6 to “0”.

7.3.2 Timer clock select register m (TPSm)

The TPSm register is a 16-bit register that is used to select two types or four types of operation clocks (CKm0, CKm1, CKm2, CKm3) that are commonly supplied to each channel. CKm0 is selected by using bits 3 to 0 of the TPSm register, and CKm1 is selected by using bits 7 to 4 of the TPSm register. In addition, only for channels 1 and 3, CKm2 and CKm3 can be also selected. CKm2 is selected by using bits 9 and 8 of the TPSm register, and CKm3 is selected by using bits 13 and 12 of the TPSm register.

Rewriting of the TPSm register during timer operation is possible only in the following cases.

If the PRSm00 to PRSm03 bits can be rewritten (n = 0 to 7):
All channels for which CKm0 is selected as the operation clock (CKSmn1, CKSmn0 = 0, 0) are stopped (TEmn = 0).
If the PRSm10 to PRSm13 bits can be rewritten (n = 0 to 7):
All channels for which CKm1 is selected as the operation clock (CKSmn1, CKSmn0 = 0, 1) are stopped (TEmn = 0).
If the PRSm20 and PRSm21 bits can be rewritten (n = 1, 3):
All channels for which CKm2 is selected as the operation clock (CKSmn1, CKSmn0 = 1, 0) are stopped (TEmn = 0).
If the PRSm30 and PRSm31 bits can be rewritten (n = 1, 3):
All channels for which CKm3 is selected as the operation clock (CKSmn1, CKSmn0 = 1, 1) are stopped (TEmn = 0).

The TPSm register can be set by a 16-bit memory manipulation instruction.

Reset signal generation clears this register to 0000H.

Figure 7-10. Format of Timer Clock Select register m (TPSm) (1/2)

Address: F01B6H, F01B7H (TPS0) After reset: 0000H R/W

Symbol	15	14	13	12	11	10	9	8	7	6	5	4	3	2	1	0
TPSm	0	0	PRS m31	PRS m30	0	0	PRS m21	PRS m20	PRS m13	PRS m12	PRS m11	PRS m10	PRS m03	PRS m02	PRS m01	PRS m00

PRS mk3	PRS mk2	PRS mk1	PRS mk0	Selection of operation clock (CKmk) Note (k = 0, 1)					
					f_{CLK} = 2 MHz	f_{CLK} = 5 MHz	f_{CLK} = 10 MHz	f_{CLK} = 20 MHz	f_{CLK} = 32 MHz
0	0	0	0	f_{CLK}	2 MHz	5 MHz	10 MHz	20 MHz	32 MHz
0	0	0	1	$f_{CLK}/2$	1 MHz	2.5 MHz	5 MHz	10 MHz	16 MHz
0	0	1	0	$f_{CLK}/2^2$	500 kHz	1.25 MHz	2.5 MHz	5 MHz	8 MHz
0	0	1	1	$f_{CLK}/2^3$	250 kHz	625 kHz	1.25 MHz	2.5 MHz	4 MHz
0	1	0	0	$f_{CLK}/2^4$	125 kHz	313 kHz	625 kHz	1.25 MHz	2 MHz
0	1	0	1	$f_{CLK}/2^5$	62.5 kHz	156 kHz	313 kHz	625 kHz	1 MHz
0	1	1	0	$f_{CLK}/2^6$	31.3 kHz	78.1 kHz	156 kHz	313 kHz	500 kHz
0	1	1	1	$f_{CLK}/2^7$	15.6 kHz	39.1 kHz	78.1 kHz	156 kHz	250 kHz
1	0	0	0	$f_{CLK}/2^8$	7.81 kHz	19.5 kHz	39.1 kHz	78.1 kHz	125 kHz
1	0	0	1	$f_{CLK}/2^9$	3.91 kHz	9.77 kHz	19.5 kHz	39.1 kHz	62.5 kHz
1	0	1	0	$f_{CLK}/2^{10}$	1.95 kHz	4.88 kHz	9.77 kHz	19.5 kHz	31.3 kHz
1	0	1	1	$f_{CLK}/2^{11}$	977 Hz	2.44 kHz	4.88 kHz	9.77 kHz	15.6 kHz
1	1	0	0	$f_{CLK}/2^{12}$	488 Hz	1.22 kHz	2.44 kHz	4.88 kHz	7.81 kHz
1	1	0	1	$f_{CLK}/2^{13}$	244 Hz	610 Hz	1.22 kHz	2.44 kHz	3.91 kHz
1	1	1	0	$f_{CLK}/2^{14}$	122 Hz	305 Hz	610 Hz	1.22 kHz	1.95 kHz
1	1	1	1	$f_{CLK}/2^{15}$	61.0 Hz	153 Hz	305 Hz	610 Hz	977 Hz

Note When changing the clock selected for f_{CLK} (by changing the system clock control register (CKC) value), stop timer array unit (TTm = 00FFH).

Cautions 1. Be sure to clear bits 15, 14, 11, 10 to "0".

2. If f_{CLK} (undivided) is selected as the operation clock (CKmk) and TDRnm is set to 0000H (n = 0, m = 0 to 7), interrupt requests output from timer array units cannot be used.

Remarks 1. f_{CLK}: CPU/peripheral hardware clock frequency

2. Waveform of the clock to be selected in the TPSm register which becomes high level for one period of f_{CLK} from its rising edge (m = 0). For details, see **7.5.1 Count clock (f_{TCLK}).**

Figure 7-10. Format of Timer Clock Select register m (TPSm) (2/2)

Address: F01B6H, F01B7H (TPS0) After reset: 0000H R/W

Symbol	15	14	13	12	11	10	9	8	7	6	5	4	3	2	1	0
TPSm	0	0	PRS m31	PRS m30	0	0	PRS m21	PRS m20	PRS m13	PRS m12	PRS m11	PRS m10	PRS m03	PRS m02	PRS m01	PRS m00

PRS m21	PRS m20	Selection of operation clock (CKm2)[Note]					
			f_{CLK} = 2 MHz	f_{CLK} = 5 MHz	f_{CLK} = 10 MHz	f_{CLK} = 20 MHz	f_{CLK} = 32 MHz
0	0	$f_{CLK}/2$	1 MHz	2.5 MHz	5 MHz	10 MHz	16 MHz
0	1	$f_{CLK}/2^2$	500 kHz	1.25 MHz	2.5 MHz	5 MHz	8 MHz
1	0	$f_{CLK}/2^4$	125 kHz	313 kHz	625 MHz	1.25 MHz	2 MHz
1	1	$f_{CLK}/2^6$	31.3 kHZ	78.1 kHz	156 kHz	313 kHz	500 kHz

PRS m31	PRS m30	Selection of operation clock (CKm3)[Note]					
			f_{CLK} = 2 MHz	f_{CLK} = 5 MHz	f_{CLK} = 10 MHz	f_{CLK} = 20 MHz	f_{CLK} = 32 MHz
0	0	$f_{CLK}/2^8$	7.81 kHz	19.5 kHz	39.1 kHz	78.1 kHz	125 kHz
0	1	$f_{CLK}/2^{10}$	1.95 kHz	4.88 kHz	9.77 kHz	19.5 kHz	31.3 kHz
1	0	$f_{CLK}/2^{12}$	488 Hz	1.22 kHz	2.44 kHz	4.88 kHz	7.81 kHz
1	1	$f_{CLK}/2^{14}$	122 HZ	305 Hz	610 Hz	1.22 kHz	1.95 kHz

Note When changing the clock selected for f_{CLK} (by changing the system clock control register (CKC) value), stop timer array unit (TTm = 00FFH).
The timer array unit must also be stopped if the operating clock (f_{MCK}) or the valid edge of the signal input from the TImn pin is selected.

Caution Be sure to clear bits 15, 14, 11, 10 to "0".

By using channels 1 and 3 in the 8-bit timer mode and specifying CKm2 or CKm3 as the operation clock, the interval times shown in Table 7-4 can be achieved by using the interval timer function.

Table 7-4. Interval Times Available for Operation Clock CKSm2 or CKSm3

Clock		Interval time[Note] (f_{CLK} = 32 MHz)			
		10 μs	100 μs	1 ms	10 ms
CKm2	$f_{CLK}/2$	✓	–	–	–
	$f_{CLK}/2^2$	✓	–	–	–
	$f_{CLK}/2^4$	✓	✓	–	–
	$f_{CLK}/2^6$	✓	✓	–	–
CKm3	$f_{CLK}/2^8$	–	✓	✓	–
	$f_{CLK}/2^{10}$	–	✓	✓	–
	$f_{CLK}/2^{12}$	–	–	✓	✓
	$f_{CLK}/2^{14}$	–	–	✓	✓

Note The margin is within 5 %.

Remarks 1. f_{CLK}: CPU/peripheral hardware clock frequency
2. For details of a signal of $f_{CLK}/2^j$ selected with the TPSm register, see **7.5.1 Count clock (f_{TCLK}).**

7.3.3 Timer mode register mn (TMRmn)

The TMRmn register sets an operation mode of channel n. This register is used to select the operation clock (f_{MCK}), select the count clock, select the master/slave, select the 16 or 8-bit timer (only for channel 1), specify the start trigger and capture trigger, select the valid edge of the timer input, and specify the operation mode (interval, capture, event counter, one-count, or capture and one-count).

Rewriting the TMRmn register is prohibited when the register is in operation (when TEmn = 1). However, bits 7 and 6 (CISmn1, CISmn0) can be rewritten even while the register is operating with some functions (when TEmn = 1) (for details, see **7.8 Independent Channel Operation Function of Timer Array Unit** and **7.9 Simultaneous Channel Operation Function of Timer Array Unit**.

The TMRmn register can be set by a 16-bit memory manipulation instruction.

Reset signal generation clears this register to 0000H.

Caution The bits mounted depend on the channels in the bit 11 of TMRmn register.

TMRm2, TMRm4, TMRm6:	**MASTERmn bit (n = 2, 4, 6)**
TMRm1, TMRm3:	**SPLITmn bit (n = 1, 3)**
TMRm0, TMRm5, TMRm7:	**Fixed to 0**

Figure 7-11. Format of Timer Mode Register mn (TMRmn) (1/4)

Address: F0190H, F0191H (TMR00) to F019EH, F019FH (TMR07) After reset: 0000H R/W

Symbol	15	14	13	12	11	10	9	8	7	6	5	4	3	2	1	0
TMRmn (mn = 02, 04, 06)	CKS mn1	CKS mn0	0	0	MASTERmn	STS mn2	STS mn1	STS mn0	CIS mn1	CIS mn0	0	0	MD mn3	MD mn2	MD mn1	MD mn0

Symbol	15	14	13	12	11	10	9	8	7	6	5	4	3	2	1	0
TMRmn (mn = 01, 03)	CKS mn1	CKS mn0	0	0	SPLIT mn	STS mn2	STS mn1	STS mn0	CIS mn1	CIS mn0	0	0	MD mn3	MD mn2	MD mn1	MD mn0

Symbol	15	14	13	12	11	10	9	8	7	6	5	4	3	2	1	0
TMRmn (mn = 00, 05, 07)	CKS mn1	CKS mn0	0	CCS mn	0 Note 1	STS mn2	STS mn1	STS mn0	CIS mn1	CIS mn0	0	0	MD mn3	MD mn2	MD mn1	MD mn0

CKS mn1	CKS mn0	Selection of operation clock (f_{MCK}) of channel n
0	0	Operation clock CKm0 set by timer clock select register m (TPSm)
0	1	Operation clock CKm2 set by timer clock select register m (TPSm)
1	0	Operation clock CKm1 set by timer clock select register m (TPSm)
1	1	Operation clock CKm3 set by timer clock select register m (TPSm)
Operation clock (f_{MCK}) is used by the edge detector. A count clock (f_{TCLK}) and a sampling clock are generated depending on the setting of the CCSmn bit. The operation clocks CKm2 and CKm3 can only be selected for channel 1 and 3.		

CCS mn	Selection of count clock (f_{TCLK}) of channel n
0	Operation clock (f_{MCK}) specified by the CKSmn0 and CKSmn1 bits
1	Valid edge of input signal input from the TImn pin In channel 5, Valid edge of input signal selected by TIS0
Count clock (f_{TCLK}) is used for the counter, output controller, and interrupt controller.	

Note Bit 11 is a read-only bit and fixed to 0. Writing to this bit is ignored.

Cautions 1. Be sure to clear bits 13, 5, and 4 to "0".

2. The timer array unit must be stopped (TTm = 00FFH) if the clock selected for f_{CLK} is changed (by changing the value of the system clock control register (CKC)), even if the operating clock specified by using the CKSmn0 and CKSmn1 bits (f_{MCK}) or the valid edge of the signal input from the TImn pin is selected as the count clock (f_{TCLK}).

Remark m: Unit number (m = 0), n: Channel number (n = 0 to 7)

Figure 7-11. Format of Timer Mode Register mn (TMRmn) (2/4)

Address: F0190H, F0191H (TMR00) to F019EH, F019FH (TMR07) After reset: 0000H R/W

Symbol	15	14	13	12	11	10	9	8	7	6	5	4	3	2	1	0
TMRmn (mn = 02, 04, 06)	CKS mn1	CKS mn0	0	0	MASTERmn	STS mn2	STS mn1	STS mn0	CIS mn1	CIS mn0	0	0	MD mn3	MD mn2	MD mn1	MD mn0

Symbol	15	14	13	12	11	10	9	8	7	6	5	4	3	2	1	0
TMRmn (mn = 01, 03)	CKS mn1	CKS mn0	0	0	SPLITmn	STS mn2	STS mn1	STS mn0	CIS mn1	CIS mn0	0	0	MD mn3	MD mn2	MD mn1	MD mn0

Symbol	15	14	13	12	11	10	9	8	7	6	5	4	3	2	1	0
TMRmn (mn = 00, 05, 07)	CKS mn1	CKS mn0	0	CCS mn	0[Note]	STS mn2	STS mn1	STS mn0	CIS mn1	CIS mn0	0	0	MD mn3	MD mn2	MD mn1	MD mn0

(Bit 11 of TMRmn (n = 2, 4, 6))

MASTERmn	Selection between using channel n independently or simultaneously with another channel(as a slave or master)
0	Operates in independent channel operation function or as slave channel in simultaneous channel operation function.
1	Operates as master channel in simultaneous channel operation function.
Only the channel 2, 4, 6 can be set as a master channel (MASTERmn = 1). Be sure to use channel 0, 5, 7 are fixed to 0 (Regardless of the bit setting, channel 0 operates as master, because it is the highest channel). Clear the MASTERmn bit to 0 for a channel that is used with the independent channel operation function.	

(Bit 11 of TMRmn (n = 1, 3))

SPLITmn	Selection of 8 or 16-bit timer operation for channels 1 and 3
0	Operates as 16-bit timer. (Operates in independent channel operation function or as slave channel in simultaneous channel operation function.)
1	Operates as 8-bit timer.

STSmn2	STSmn1	STSmn0	Setting of start trigger or capture trigger of channel n
0	0	0	Only software trigger start is valid (other trigger sources are unselected).
0	0	1	Valid edge of the TImn pin input is used as both the start trigger and capture trigger.
0	1	0	Both the edges of the TImn pin input are used as a start trigger and a capture trigger.
1	0	0	Interrupt signal of the master channel is used (when the channel is used as a slave channel with the simultaneous channel operation function).
Other than above			Setting prohibited

Note Bit 11 is a read-only bit and fixed to 0. Writing to this bit is ignored.

Remark m: Unit number (m = 0), n: Channel number (n = 0 to 7)

Figure 7-11. Format of Timer Mode Register mn (TMRmn) (3/4)

Address: F0190H, F0191H (TMR00) to F019EH, F019FH (TMR07) After reset: 0000H R/W

Symbol	15	14	13	12	11	10	9	8	7	6	5	4	3	2	1	0
TMRmn (mn = 02, 04, 06)	CKSmn1	CKSmn0	0	0	MASTERmn	STSmn2	STSmn1	STSmn0	CISmn1	CISmn0	0	0	MDmn3	MDmn2	MDmn1	MDmn0

Symbol	15	14	13	12	11	10	9	8	7	6	5	4	3	2	1	0
TMRmn (mn = 01, 03)	CKSmn1	CKSmn0	0	0	SPLITmn	STSmn2	STSmn1	STSmn0	CISmn1	CISmn0	0	0	MDmn3	MDmn2	MDmn1	MDmn0

Symbol	15	14	13	12	11	10	9	8	7	6	5	4	3	2	1	0
TMRmn (mn = 00, 05, 07)	CKSmn1	CKSmn0	0	CCSmn	0[Note]	STSmn2	STSmn1	STSmn0	CISmn1	CISmn0	0	0	MDmn3	MDmn2	MDmn1	MDmn0

CISmn1	CISmn0	Selection of TImn pin input valid edge
0	0	Falling edge
0	1	Rising edge
1	0	Both edges (when low-level width is measured) Start trigger: Falling edge, Capture trigger: Rising edge
1	1	Both edges (when high-level width is measured) Start trigger: Rising edge, Capture trigger: Falling edge
If both the edges are specified when the value of the STSmn2 to STSmn0 bits is other than 010B, set the CISmn1 to CISmn0 bits to 10B.		

Note Bit 11 is a read-only bit and fixed to 0. Writing to this bit is ignored.

Remark m: Unit number (m = 0), n: Channel number (n = 0 to 7)

Figure 7-11. Format of Timer Mode Register mn (TMRmn) (4/4)

Address: F0190H, F0191H (TMR00) to F019EH, F019FH (TMR07) After reset: 0000H R/W

Symbol	15	14	13	12	11	10	9	8	7	6	5	4	3	2	1	0
TMRmn (mn = 02, 04, 06)	CKS mn1	CKS mn0	0	0	MASTERmn	STS mn2	STS mn1	STS mn0	CIS mn1	CIS mn0	0	0	MD mn3	MD mn2	MD mn1	MD mn0

Symbol	15	14	13	12	11	10	9	8	7	6	5	4	3	2	1	0
TMRmn (mn = 01, 03)	CKS mn1	CKS mn0	0	0	SPLIT mn	STS mn2	STS mn1	STS mn0	CIS mn1	CIS mn0	0	0	MD mn3	MD mn2	MD mn1	MD mn0

Symbol	15	14	13	12	11	10	9	8	7	6	5	4	3	2	1	0
TMRmn (mn = 00, 05, 07)	CKS mn1	CKS mn0	0	CCS mn	0 Note 1	STS mn2	STS mn1	STS mn0	CIS mn1	CIS mn0	0	0	MD mn3	MD mn2	MD mn1	MD mn0

MD mn3	MD mn2	MD mn1	Operation mode of channel n	Corresponding function	Count operation of TCR
0	0	0	Interval timer mode	Interval timer / Square wave output / Divider function / PWM output (master)	Counting down
0	1	0	Capture mode	Input pulse interval measurement	Counting up
0	1	1	Event counter mode	External event counter	Counting down
1	0	0	One-count mode	Delay counter / One-shot pulse output / PWM output (slave)	Counting down
1	1	0	Capture & one-count mode	Measurement of high-/low-level width of input signal	Counting up
Other than above			Setting prohibited		
The operation of each mode varies depending on MDmn0 bit (see the table below).					

Operation mode (Value set by the MDmn3 to MDmn1 bits (see the table above))	MD mn0	Setting of starting counting and interrupt
● Interval timer mode (0, 0, 0) ● Capture mode (0, 1, 0)	0	Timer interrupt is not generated when counting is started (timer output does not change, either).
	1	Timer interrupt is generated when counting is started (timer output also changes).
● Event counter mode (0, 1, 1)	0	Timer interrupt is not generated when counting is started (timer output does not change, either).
● One-count mode Note 2 (1, 0, 0)	0	Start trigger is invalid during counting operation. At that time, interrupt is not generated.
	1	Start trigger is valid during counting operation Note 3. At that time, interrupt is not generated.
● Capture & one-count mode (1, 1, 0)	0	Timer interrupt is not generated when counting is started (timer output does not change, either). Start trigger is invalid during counting operation. At that time interrupt is not generated.
Other than above		Setting prohibited

Notes 1. Bit 11 is a read-only bit and fixed to 0. Writing to this bit is ignored.

2. In one-count mode, interrupt output (INTTMmn) when starting a count operation and TOmn output are not controlled.

3. If the start trigger (TSmn = 1) is issued during operation, the counter is initialized, and recounting is started (does not occur the interrupt request).

Remark m: Unit number (m = 0), n: Channel number (n = 0 to 7)

7.3.4 Timer status register mn (TSRmn)

The TSRmn register indicates the overflow status of the counter of channel n.

The TSRmn register is valid only in the capture mode (MDmn3 to MDmn1 = 010B) and capture & one-count mode (MDmn3 to MDmn1 = 110B). See Table 7-5 for the operation of the OVF bit in each operation mode and set/clear conditions.

The TSRmn register can be read by a 16-bit memory manipulation instruction.

The lower 8 bits of the TSRmn register can be set with an 8-bit memory manipulation instruction with TSRmnL.

Reset signal generation clears this register to 0000H.

Figure 7-12. Format of Timer Status Register mn (TSRmn)

Address: F01A0H, F01A1H (TSR00) to F01AEH, F01AFH (TSR07) After reset: 0000H R

Symbol	15	14	13	12	11	10	9	8	7	6	5	4	3	2	1	0
TSRmn	0	0	0	0	0	0	0	0	0	0	0	0	0	0	0	OVF

OVF	Counter overflow status of channel n
0	Overflow does not occur.
1	Overflow occurs.
When OVF = 1, this flag is cleared (OVF = 0) when the next value is captured without overflow.	

Remark m: Unit number (m = 0), n: Channel number (n = 0 to 7)

Table 7-5. OVF Bit Operation and Set/Clear Conditions in Each Operation Mode

Timer Operation Mode	OVF Bit	Set/Clear Conditions
● Capture mode ● Capture & one-count mode	clear	When no overflow has occurred upon capturing
	set	When an overflow has occurred upon capturing
● Interval timer mode ● Event counter mode ● One-count mode	clear	– (Use prohibited)
	set	

Remark The OVF bit does not change immediately after the counter has overflowed, but changes upon the subsequent capture.

7.3.5 Timer channel enable status register m (TEm)

The TEm register is used to enable or stop the timer operation of each channel.

Each bit of the TEm register corresponds to each bit of the timer channel start register m (TSm) and the timer channel stop register m (TTm). When a bit of the TSm register is set to 1, the corresponding bit of this register is set to 1. When a bit of the TTm register is set to 1, the corresponding bit of this register is cleared to 0.

The TEm register can be read by a 16-bit memory manipulation instruction.

The lower 8 bits of the TEm register can be set with a 1-bit or 8-bit memory manipulation instruction with TEmL.

Reset signal generation clears this register to 0000H.

Figure 7-13. Format of Timer Channel Enable Status register m (TEm)

Address: F01B0H, F01B1H (TE0) After reset: 0000H R

Symbol	15	14	13	12	11	10	9	8	7	6	5	4	3	2	1	0
TEm	0	0	0	0	TEHm3	0	TEHm1	0	TEm7	TEm6	TEm5	TEm4	TEm3	TEm2	TEm1	TEm0

TEHm3	Indication of whether operation of the higher 8-bit timer is enabled or stopped when channel 3 is in the 8-bit timer mode
0	Operation is stopped.
1	Operation is enabled.

TEHm1	Indication of whether operation of the higher 8-bit timer is enabled or stopped when channel 1 is in the 8-bit timer mode
0	Operation is stopped.
1	Operation is enabled.

TEmn	Indication of operation enable/stop status of channel n
0	Operation is stopped.
1	Operation is enabled.
This bit displays whether operation of the lower 8-bit timer for TEm1 and TEm3 is enabled or stopped when channel 1 or 3 is in the 8-bit timer mode.	

Remark m: Unit number (m = 0), n: Channel number (n = 0 to 7)

7.3.6 Timer channel start register m (TSm)

The TSm register is a trigger register that is used to initialize timer count register mn (TCRmn) and start the counting operation of each channel.

When a bit of this register is set to 1, the corresponding bit of timer channel enable status register m (TEm) is set to 1. The TSmn, TSHm1, TSHm3 bits are immediately cleared when operation is enabled (TEmn, TEHm1, TEHm3 = 1), because they are trigger bits.

The TSm register can be set by a 16-bit memory manipulation instruction.

The lower 8 bits of the TSm register can be set with a 1-bit or 8-bit memory manipulation instruction with TSmL.

Reset signal generation clears this register to 0000H.

Figure 7-14. Format of Timer Channel Start register m (TSm)

Address: F01B2H, F01B3H (TS0) After reset: 0000H R/W

Symbol	15	14	13	12	11	10	9	8	7	6	5	4	3	2	1	0
TSm	0	0	0	0	TSHm3	0	TSHm1	0	TSm7	TSm6	TSm5	TSm4	TSm3	TSm2	TSm1	TSm0

TSHm3	Trigger to enable operation (start operation) of the higher 8-bit timer when channel 3 is in the 8-bit timer mode
0	No trigger operation
1	The TEHm3 bit is set to 1 and the count operation becomes enabled. The TCRm3 register count operation start in the interval timer mode in the count operation enabled state (see **Table 7-6** in **7.5.2 Start timing of counter**).

TSHm1	Trigger to enable operation (start operation) of the higher 8-bit timer when channel 1 is in the 8-bit timer mode
0	No trigger operation
1	The TEHm1 bit is set to 1 and the count operation becomes enabled. The TCRm1 register count operation start in the interval timer mode in the count operation enabled state (see **Table 7-6** in **7.5.2 Start timing of counter**).

TSmn	Operation enable (start) trigger of channel n
0	No trigger operation
1	The TEmn bit is set to 1 and the count operation becomes enabled. The TCRmn register count operation start in the count operation enabled state varies depending on each operation mode (see **Table 7-6** in **7.5.2 Start timing of counter**). This bit is the trigger to enable operation (start operation) of the lower 8-bit timer for TSm1 and TSm3 when channel 1 or 3 is in the 8-bit timer mode.

Cautions 1. Be sure to clear bits 15 to 12, 10, and 8 to "0"

2. When switching from a function that does not use TImn pin input to one that does, the following wait period is required from when timer mode register mn (TMRmn) is set until the TSmn (TSHm1, TSHm3) bit is set to 1.

When the TImn pin noise filter is enabled (TNFENnm = 1): Four cycles of the operation clock (f_{MCK})

When the TImn pin noise filter is disabled (TNFENnm = 0): Two cycles of the operation clock (f_{MCK})

Remarks 1. When the TSm register is read, 0 is always read.

2. m: Unit number (m = 0), n: Channel number (n = 0 to 7)

7.3.7 Timer channel stop register m (TTm)

The TTm register is a trigger register that is used to stop the counting operation of each channel.

When a bit of this register is set to 1, the corresponding bit of timer channel enable status register m (TEm) is cleared to 0. The TTmn, TTHm1, TTHm3 bits are immediately cleared when operation is stopped (TEmn, TEHm1, TEHm3 = 0), because they are trigger bits.

The TTm register can be set by a 16-bit memory manipulation instruction.

The lower 8 bits of the TTm register can be set with a 1-bit or 8-bit memory manipulation instruction with TTmL.

Reset signal generation clears this register to 0000H.

Figure 7-15. Format of Timer Channel Stop register m (TTm)

Address: F01B4H, F01B5H (TT0) After reset: 0000H R/W

Symbol	15	14	13	12	11	10	9	8	7	6	5	4	3	2	1	0
TTm	0	0	0	0	TTHm3	0	TTHm1	0	TTm7	TTm6	TTm5	TTm4	TTm3	TTm2	TTm1	TTm0

TTHm3	Trigger to stop operation of the higher 8-bit timer when channel 3 is in the 8-bit timer mode
0	No trigger operation
1	TEHm3 bit is cleared to 0 and the count operation is stopped

TTHm1	Trigger to stop operation of the higher 8-bit timer when channel 1 is in the 8-bit timer mode
0	No trigger operation
1	TEHm1 bit is cleared to 0 and the count operation is stopped.

TTmn	Operation stop trigger of channel n
0	No trigger operation
1	TEmn bit is cleared to 0 and the count operation is stopped. This bit is the trigger to stop operation of the lower 8-bit timer for TTm1 and TTm3 when channel 1 or 3 is in the 8-bit timer mode.

Caution Be sure to clear bits 15 to 12, 10, and 8 of the TTm register to "0".

Remarks 1. When the TTm register is read, 0 is always read.

2. m: Unit number (m = 0), n: Channel number (n = 0 to 7)

7.3.8 Timer input select register 0 (TIS0)

The TIS0 register is used to select the channel 5 of unit 0 timer input..

The TIS0 register can be set by an 8-bit memory manipulation instruction.

Reset signal generation clears this register to 00H.

Figure 7-16. Format of Timer Input Select register 0 (TIS0)

Address: F0074H After reset: 00H R/W

Symbol	7	6	5	4	3	2	1	0
TIS0	0	0	0	0	0	TIS02	TIS01	TIS00

TIS02	TIS01	TIS00	Selection of timer input used with channel 5
0	0	0	Input signal of timer input pin (TI05)
0	0	1	
0	1	0	
0	1	1	
1	0	0	Low-speed on-chip oscillator clock (f_{IL})
1	0	1	Subsystem clock (f_{SUB})
Other than above			Setting prohibited

Caution High-level width, low-level width of timer input is selected, will require more than 1/f_{MCK} +10 ns. Therefore, when selecting f_{SUB} to f_{CLK} (CSS bit of CKC register = 1), can not TIS02 bit set to 1.

7.3.9 Timer output enable register 0 (TOE0)

The TOE0 register is used to enable or disable timer output of each channel.

Channel n for which timer output has been enabled becomes unable to rewrite the value of the TO0n bit of timer output register 0 (TO0) described later by software, and the value reflecting the setting of the timer output function through the count operation is output from the timer output pin (TO0n).

The TOE0 register can be set by a 16-bit memory manipulation instruction.

The lower 8 bits of the TOE0 register can be set with a 1-bit or 8-bit memory manipulation instruction with TOE0L.

Reset signal generation clears this register to 0000H.

Figure 7-17. Format of Timer Output Enable register 0 (TOE0)

Address: F01BAH, F01BBH (TOE0) After reset: 0000H R/W

Symbol	15	14	13	12	11	10	9	8	7	6	5	4	3	2	1	0
TOE0	0	0	0	0	0	0	0	0	TOE07	TOE06	TOE05	TOE04	TOE03	TOE02	TOE01	TOE00

TOE0n	Timer output enable/disable of channel n
0	Disable output of timer. Without reflecting on TO0n bit timer operation, to fixed the output. Writing to the TO0n bit is enabled and the level set in the TO0n bit is output from the TO0n pin.
1	Enable output of timer. Reflected in the TO0n bit timer operation, to generate the output waveform. Writing to the TO0n bit is disabled (writing is ignored).

Caution Be sure to clear bits 15 to 8 to “0”.

Remark n: Channel number (n = 0 to 7)

7.3.10 Timer output register 0 (TO0)

The TOm register is a buffer register of timer output of each channel.

The value of each bit in this register is output from the timer output pin (TO0n) of each channel.

The TO0n bit oh this register can be rewritten by software only when timer output is disabled (TOE0n = 0). When timer output is enabled (TOE0n = 1), rewriting this register by software is ignored, and the value is changed only by the timer operation.

To use the P00/TI00, P01/TO00, P15/(TI02)Note/(TO02)Note, P14/(TI03)Note/(TO03), P13/(TI04)Note/(TO04)Note, P12/(TI05)Note/(TO05)Note, P11/(TI06)Note/(TO06)Note, P10/(TI07)Note/(TO07)Note pins as ports function pins, set the corresponding TO0n bit to “0”.

The TO0 register can be set by a 16-bit memory manipulation instruction.

The lower 8 bits of the TO0 register can be set with an 8-bit memory manipulation instruction with TO0L.

Reset signal generation clears this register to 0000H.

Note Functions in parentheses can be assigned via settings in the peripheral I/O redirection register (PIOR).

Figure 7-18. Format of Timer Output register 0 (TO0)

Address: F01B8H, F01B9H (TO0) After reset: 0000H R/W

Symbol	15	14	13	12	11	10	9	8	7	6	5	4	3	2	1	0
TO0	0	0	0	0	0	0	0	0	TO07	TO06	TO05	TO04	TO03	TO02	TO01	TO010

TO0n	Timer output of channel n
0	Timer output value is “0”.
1	Timer output value is “1”.

Caution. Be sure to clear bits 15 to 8 to “0”.

Remark n: Channel number (n = 0 to 7)

7.3.11 Timer output level register 0 (TOL0)

The TOL0 register is a register that controls the timer output level of each channel.

The setting of the inverted output of channel n by this register is reflected at the timing of set or reset of the timer output signal while the timer output is enabled (TOE0n = 1) in the Slave channel output mode (TOM0n = 1). In the master channel output mode (TOM0n = 0), this register setting is invalid.

The TOL0 register can be set by a 16-bit memory manipulation instruction.

The lower 8 bits of the TOL0 register can be set with an 8-bit memory manipulation instruction with TOL0L.

Reset signal generation clears this register to 0000H.

Figure 7-19. Format of Timer Output Level register 0 (TOL0)

Address: F01BCH, F01BDH (TOL0) After reset: 0000H R/W

Symbol	15	14	13	12	11	10	9	8	7	6	5	4	3	2	1	0
TOL0	0	0	0	0	0	0	0	0	TOL 07	TOL 06	TOL 05	TOL 04	TOL 03	TOL 02	TOL 01	0

TOL 0n	Control of timer output level of channel n
0	Positive logic output (active-high)
1	Negative logic output (active-low)

Caution Be sure to clear bits 15 to 8, 0 to "0".

Remarks 1. If the value of this register is rewritten during timer operation, the timer output logic is inverted when the timer output signal changes next, instead of immediately after the register value is rewritten.

2. n: Channel number (n = 0 to 7)

7.3.12 Timer output mode register 0 (TOM0)

The TOM0 register is used to control the timer output mode of each channel.

When a channel is used for the independent channel operation function, set the corresponding bit of the channel to be used to 0.

When a channel is used for the simultaneous channel operation function (one-shot pulse output), set the corresponding bit of the master channel to 0 and the corresponding bit of the slave channel to 1.

The setting of each channel n by this register is reflected at the timing when the timer output signal is set or reset while the timer output is enabled (TOE0n = 1).

The TOM0 register can be set by a 16-bit memory manipulation instruction.

The lower 8 bits of the TOM0 register can be set with an 8-bit memory manipulation instruction with TOM0L.

Reset signal generation clears this register to 0000H.

Figure 7-20. Format of Timer Output Mode register 0 (TOM0)

Address: F01BEH, F01BFH (TOM0) After reset: 0000H R/W

Symbol	15	14	13	12	11	10	9	8	7	6	5	4	3	2	1	0
TOM0	0	0	0	0	0	0	0	0	TOM 07	TOM 06	TOM 05	TOM 04	TOM 03	TOM 02	TOM 01	0

TOM 0n	Control of timer output mode of channel n
0	Master channel output mode (to produce toggle output by timer interrupt request signal (INTTMmn))
1	Slave channel output mode (output is set by the timer interrupt request signal (INTTMmn) of the master channel, and reset by the timer interrupt request signal (INTTM0p) of the slave channel)

Caution Be sure to clear bits 15 to 8, 0 to "0".

Remark n: Channel number
n = 0 to 7 (n = 0, 2, 4, 6 for master channel)
p: Slave channel number
n < p ≤ 7
(For details of the relation between the master channel and slave channel, refer to **7.4.1 Basic rules of simultaneous channel operation function**.)

7.3.13 Noise filter enable register 1 (NFEN1)

The NFEN1 register is used to set whether the noise filter can be used for the timer input signal to each channel.

Enable the noise filter by setting the corresponding bits to 1 on the pins in need of noise removal.

When the noise filter is enabled, after synchronization with the operating clock (f_{MCK}) for the target channel, whether the signal keeps the same value for two clock cycles is detected.

When the noise filter is disabled, the input signal is only synchronized with the operating clock (f_{MCK}) for the target channel[Note].

The NFEN1 register can be set by a 1-bit or 8-bit memory manipulation instruction.

Reset signal generation clears this register to 00H.

Note For details, see **7.5.1 (2) When valid edge of input signal via the TImn pin is selected (CCSmn = 1)**, **7.5.2 Start timing of counter**, and **7.7 Timer Input (TImn) Control**.

Figure 7-21. Format of Noise Filter Enable Register 1 (NFEN1)

Address: F0071H After reset: 00H R/W

Symbol	7	6	5	4	3	2	1	0
NFEN1	TNFEN07	TNFEN06	TNFEN05	TNFEN04	TNFEN03	TNFEN02	TNFEN01	TNFEN00

TNFEN07	Enable/disable using noise filter of TI07 pin
0	Noise filter OFF
1	Noise filter ON

TNFEN06	Enable/disable using noise filter of TI06 pin
0	Noise filter OFF
1	Noise filter ON

TNFEN05	Enable/disable using noise filter of TI05 pin
0	Noise filter OFF
1	Noise filter ON

TNFEN04	Enable/disable using noise filter of TI04 pin
0	Noise filter OFF
1	Noise filter ON

TNFEN03	Enable/disable using noise filter of TI03 pin
0	Noise filter OFF
1	Noise filter ON

TNFEN02	Enable/disable using noise filter of TI02 pin
0	Noise filter OFF
1	Noise filter ON

TNFEN01	Enable/disable using noise filter of TI01 pin
0	Noise filter OFF
1	Noise filter ON

TNFEN00	Enable/disable using noise filter of TI00 pin
0	Noise filter OFF
1	Noise filter ON

7.3.14 Registers controlling port functions of pins to be used for timer I/O

Using port pins for the timer array unit functions requires setting of the registers that control the port functions multiplexed on the target pins (port mode register (PMxx), port register (Pxx), and port mode control register (PMCxx)). For details, see **5.3.1 Port mode registers (PMxx)**, **5.3.2 Port registers (Pxx)**, and **5.3.6 Port mode control registers (PMCxx)**.

The port mode register (PMxx) and port register (Pxx) to be set depend on the target pins. For details, see **5.5.3 Register setting examples for used port and alternate functions**.

When using the ports (such as P00/TI00, P01/TO00) to be shared with the timer output pin for timer output, set the port mode control register (PMCxx) bit, the port mode register (PMxx) bit and port register (Pxx) bit corresponding to each port to 0.

Example When using P01/TO00 for timer output
Set the PMC01 bit of port mode control register 0 to 0.
Set the PM01 bit of port mode register 0 to 0.
Set the P01 bit of port register 0 to 0.

When using the ports (such as P00/TI00) to be shared with the timer input pin for timer input, set the port mode register (PMxx) bit corresponding to each port to 1. At this time, the port register (Pxx) bit may be 0 or 1.

Example When using P16/TO01/TI01 for timer input
Set the PMC00 bit of port mode control register 0 to 0.
Set the PM00 bit of port mode register 0 to 1.
Set the P00 bit of port register 0 to 0 or 1.

7.4 Basic Rules of Timer Array Unit

7.4.1 Basic rules of simultaneous channel operation function

When simultaneously using multiple channels, namely, a combination of a master channel (a reference timer mainly counting the cycle) and slave channels (timers operating according to the master channel), the following rules apply.

(1) Only an even channel (channel 0, 2, 4, etc.) can be set as a master channel.
(2) Any channel, except channel 0, can be set as a slave channel.
(3) The slave channel must be lower than the master channel.
Example: If channel 2 is set as a master channel, channel 3 or those that follow (channels 3, 4, 5, etc.) can be set as a slave channel.

(4) Two or more slave channels can be set for one master channel.
(5) When two or more master channels are to be used, slave channels with a master channel between them may not be set.
Example: If channels 0 and 4 are set as master channels, channels 1 to 3 can be set as the slave channels of master channel 0. Channels 5 to 7 cannot be set as the slave channels of master channel 0.

(6) The operating clock for a slave channel in combination with a master channel must be the same as that of the master channel. The CKSmn0, CKSmn1 bits (bit 15, 14 of timer mode register mn (TMRmn)) of the slave channel that operates in combination with the master channel must be the same value as that of the master channel.
(7) A master channel can transmit INTTMmn (interrupt), start software trigger, and count clock to the lower channels.
(8) A slave channel can use INTTMmn (interrupt), a start software trigger, or the count clock of the master channel as a source clock, but cannot transmit its own INTTMmn (interrupt), start software trigger, or count clock to channels with lower channel numbers.
(9) A master channel cannot use INTTMmn (interrupt), a start software trigger, or the count clock from the other higher master channel as a source clock.
(10) To simultaneously start channels that operate in combination, the channel start trigger bit (TSmn) of the channels in combination must be set at the same time.
(11) During the counting operation, a TSmn bit of a master channel or TSmn bits of all channels which are operating simultaneously can be set. It cannot be applied to TSmn bits of slave channels alone.
(12) To stop the channels in combination simultaneously, the channel stop trigger bit (TTmn) of the channels in combination must be set at the same time.
(13) CKm2/CKm3 cannot be selected while channels are operating simultaneously, because the operating clocks of master channels and slave channels have to be synchronized.
(14) Timer mode register m0 (TMRm0) has no master bit (it is fixed as “0”). However, as channel 0 is the highest channel, it can be used as a master channel during simultaneous operation.

The rules of the simultaneous channel operation function are applied in a channel group (a master channel and slave channels forming one simultaneous channel operation function).

If two or more channel groups that do not operate in combination are specified, the basic rules of the simultaneous channel operation function in **7.4.1 Basic rules of simultaneous channel operation function** do not apply to the channel groups.

Remark m: Unit number (m = 0), n: Channel number (n = 0 to 7)

Example

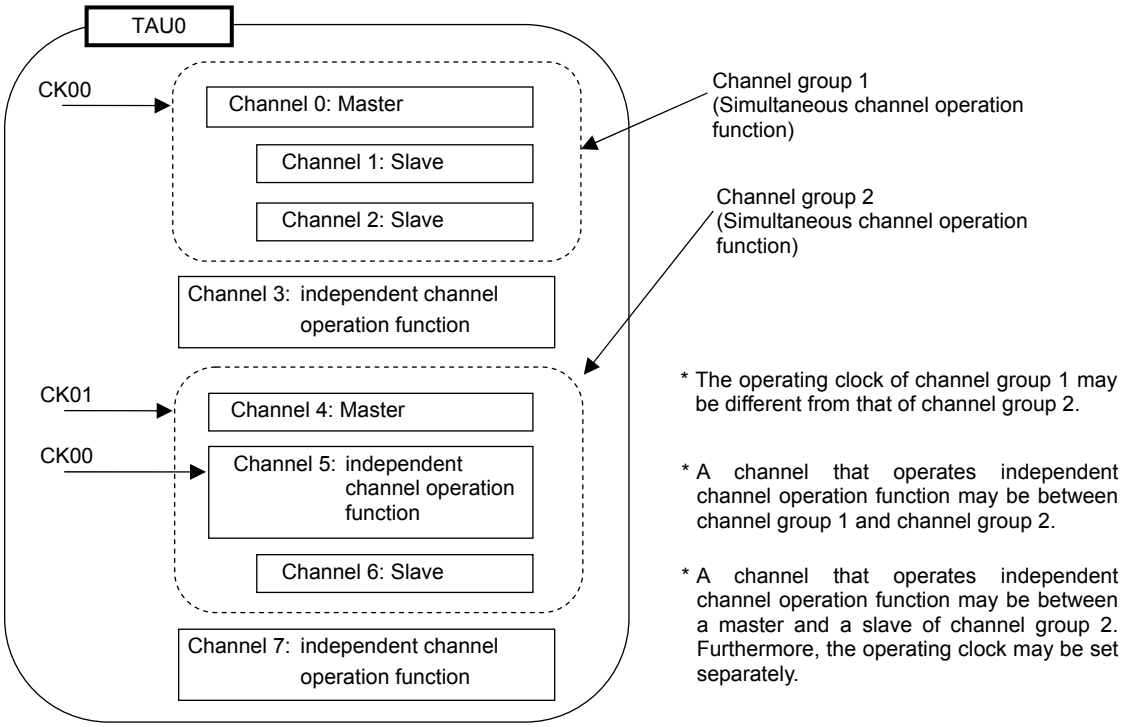
TAU0
CK00
Channel 0: Master
Channel 1: Slave
Channel 2: Slave
Channel 3: independent channel operation function
CK01
Channel 4: Master
CK00
Channel 5: independent channel operation function
Channel 6: Slave
Channel 7: independent channel operation function
Channel group 1 (Simultaneous channel operation function)
Channel group 2 (Simultaneous channel operation function)
* The operating clock of channel group 1 may be different from that of channel group 2.
* A channel that operates independent channel operation function may be between channel group 1 and channel group 2.
* A channel that operates independent channel operation function may be between a master and a slave of channel group 2. Furthermore, the operating clock may be set separately.

7.4.2 Basic rules of 8-bit timer operation function (channels 1 and 3 only)

The 8-bit timer operation function makes it possible to use a 16-bit timer channel in a configuration consisting of two 8-bit timer channels.

This function can only be used for channels 1 and 3, and there are several rules for using it.

The basic rules for this function are as follows:

(1) The 8-bit timer operation function applies only to channels 1 and 3.
(2) When using 8-bit timers, set the SPLIT bit of timer mode register mn (TMRmn) to 1.
(3) The higher 8 bits can be operated as the interval timer function.
(4) At the start of operation, the higher 8 bits output INTTMm1H/INTTMm3H (an interrupt) (which is the same operation performed when MDmn0 is set to 1).
(5) The operation clock of the higher 8 bits is selected according to the CKSmn1 and CKSmn0 bits of the lower-bit TMRmn register.
(6) For the higher 8 bits, the TSHm1/TSHm3 bit is manipulated to start channel operation and the TTHm1/TTHm3 bit is manipulated to stop channel operation. The channel status can be checked using the TEHm1/TEHm3 bit.
(7) The lower 8 bits operate according to the TMRmn register settings. The following three functions support operation of the lower 8 bits:
    Interval timer function
    External event counter function
    Delay count function

(8) For the lower 8 bits, the TSm1/TSm3 bit is manipulated to start channel operation and the TTm1/TTm3 bit is manipulated to stop channel operation. The channel status can be checked using the TEm1/TEm3 bit.
(9) During 16-bit operation, manipulating the TSHm1, TSHm3, TTHm1, and TTHm3 bits is invalid. The TSm1, TSm3, TTm1, and TTm3 bits are manipulated to operate channels 1 and 3. The TEHm3 and TEHm1 bits are not changed.
(10) For the 8-bit timer function, the simultaneous operation functions (one-shot pulse, PWM, and multiple PWM) cannot be used.

Remark m: Unit number (m = 0), n: Channel number (n = 1, 3)

7.5 Operation of Counter

7.5.1 Count clock (f_{TCLK})

The count clock (f_{TCLK}) of the timer array unit can be specified as follows by CCSmn bit of timer mode register mn (TMRmn).

- Operation clock (f_{MCK}) specified by CKSmn0 and CKSmn1 bits.
- Valid edge of TImn input pin.

Because the timer array unit is designed to operate in synchronization with f_{CLK}, the timings of the count clock (f_{TCLK}) are shown below.

(1) When operation clock (f_{MCK}) specified by the CKSmn0 and CKSmn1 bits is selected (CCSmn = 0)

The count clock (f_{TCLK}) is between f_{CLK} to f_{CLK} /2^{15} by setting of timer clock select register m (TPSm). When a divided f_{CLK} is selected, however, the clock selected in TPSmn register, but a signal which becomes high level for one period of f_{CLK} from its rising edge. When a f_{CLK} is selected, fixed to high level

Counting of timer count register mn (TCRmn) delayed by one period of f_{CLK} from rising edge of the count clock, because of synchronization with f_{CLK}. But, this is described as “counting at rising edge of the count clock”, as a matter of convenience.

Figure 7-22. Timing of f_{CLK} and count clock (f_{TCLK})

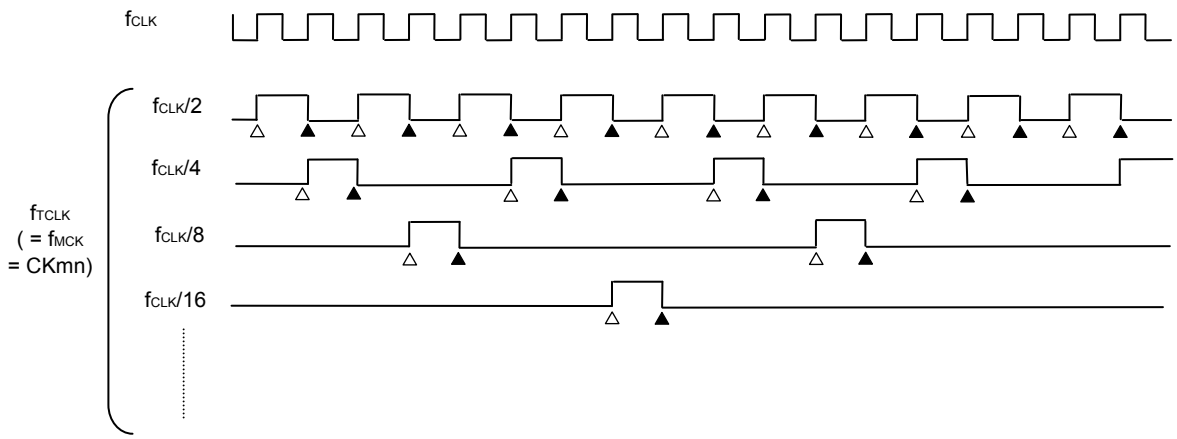

Remarks 1. △ : Rising edge of the count clock

▲ : Synchronization, increment/decrement of counter

2. f_{CLK}: CPU/peripheral hardware clock

(2) When valid edge of input signal via the TImn pin is selected (CCSmn = 1)

The count clock (f_{TCLK}) becomes the signal that detects valid edge of input signal via the TImn pin and synchronizes next rising f_{MCK}. The count clock (f_{TCLK}) is delayed for 1 to 2 period of f_{MCK} from the input signal via the TImn pin (when a noise filter is used, the delay becomes 3 to 4 clock).

Counting of timer count register mn (TCRmn) delayed by one period of f_{CLK} from rising edge of the count clock, because of synchronization with f_{CLK}. But, this is described as "counting at valid edge of input signal via the TImn pin", as a matter of convenience.

Figure 7-23. Timing of f_{CLK} and count clock (f_{TCLK}) (When CCSmn = 1, noise filter unused)

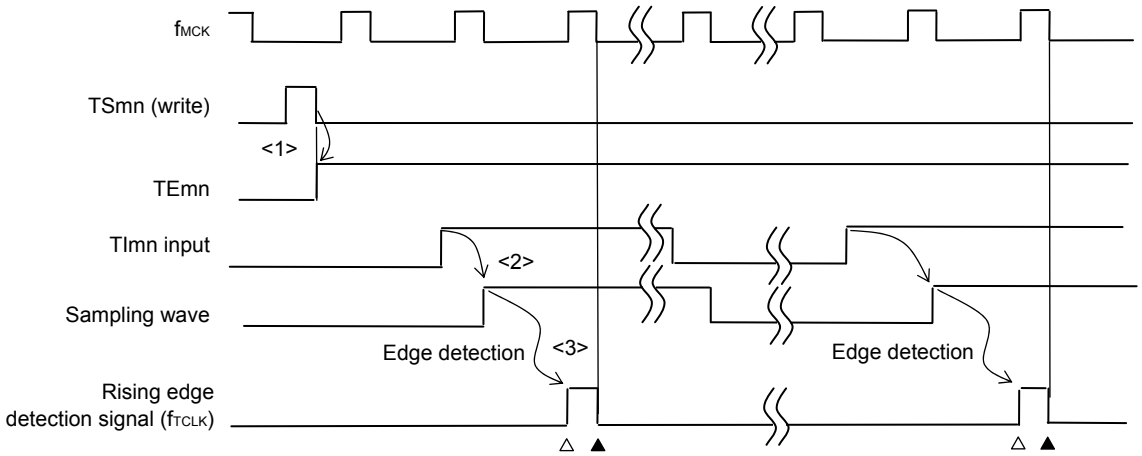

<1> Setting TSmn bit to 1 enables the timer to be started and to become wait state for valid edge of input signal via the TImn pin.

<2> The rise of input signal via the TImn pin is sampled by f_{MCK}.

<3> The edge is detected by the rising of the sampled signal and the detection signal (count clock) is output.

Remarks 1. △ : Rising edge of the count clock
▲ : Synchronization, increment/decrement of counter

2. f_{CLK}: CPU/peripheral hardware clock
f_{MCK}: Operation clock of channel n

3. The waveform of the input signal via TImn pin of the input pulse interval measurement, the measurement of high/low width of input signal, and the delay counter, the one-shot pulse output are the same.

7.5.2 Start timing of counter

Timer count register mn (TCRmn) becomes enabled to operation by setting of TSmn bit of timer channel start register m (TSm).

Operations from count operation enabled state to timer count Register mn (TCRmn) count start is shown in Table 7-6.

Table 7-6. Operations from Count Operation Enabled State to Timer count Register mn (TCRmn) Count Start

Timer Operation Mode	Operation When TSmn = 1 Is Set
● Interval timer mode	No operation is carried out from start trigger detection (TSmn=1) until count clock generation. The first count clock loads the value of the TDRmn register to the TCRmn register and the subsequent count clock performs count down operation (see **7.5.3 (1) Operation of interval timer mode**).
● Event counter mode	Writing 1 to the TSmn bit loads the value of the TDRmn register to the TCRmn register. If detect edge of TImn input. The subsequent count clock performs count down operation (see **7.5.3 (2) Operation of event counter mode**).
● Capture mode	No operation is carried out from start trigger detection (TSmn = 1) until count clock generation. The first count clock loads 0000H to the TCRmn register and the subsequent count clock performs count up operation (see **7.5.3 (3) Operation of capture mode (input pulse interval measurement)**).
● One-count mode	The waiting-for-start-trigger state is entered by writing 1 to the TSmn bit while the timer is stopped (TEmn = 0). No operation is carried out from start trigger detection until count clock generation. The first count clock loads the value of the TDRmn register to the TCRmn register and the subsequent count clock performs count down operation (see **7.5.3 (4) Operation of one-count mode**).
● Capture & one-count mode	The waiting-for-start-trigger state is entered by writing 1 to the TSmn bit while the timer is stopped (TEmn = 0). No operation is carried out from start trigger detection until count clock generation. The first count clock loads 0000H to the TCRmn register and the subsequent count clock performs count up operation (see **7.5.3 (5) Operation of capture & one-count mode (high-level interval measurement)**).

7.5.3 Operation of counter

Here, the counter operation in each mode is explained.

(1) Operation of interval timer mode

<1> Operation is enabled (TEmn = 1) by writing 1 to the TSmn bit. Timer count register mn (TCRmn) holds the initial value until count clock generation.

<2> A start trigger is generated at the first count clock after operation is enabled.

<3> When the MDmn0 bit is set to 1, INTTMmn is generated by the start trigger.

<4> By the first count clock after the operation enable, the value of timer data register mn (TDRmn) is loaded to the TCRmn register and counting starts in the interval timer mode.

<5> When the TCRmn register counts down and its count value is 0000H, INTTMmn is generated and the value of timer data register mn (TDRmn) is loaded to the TCRmn register and counting keeps on.

Figure 7-24. Operation Timing (In Interval Timer Mode)

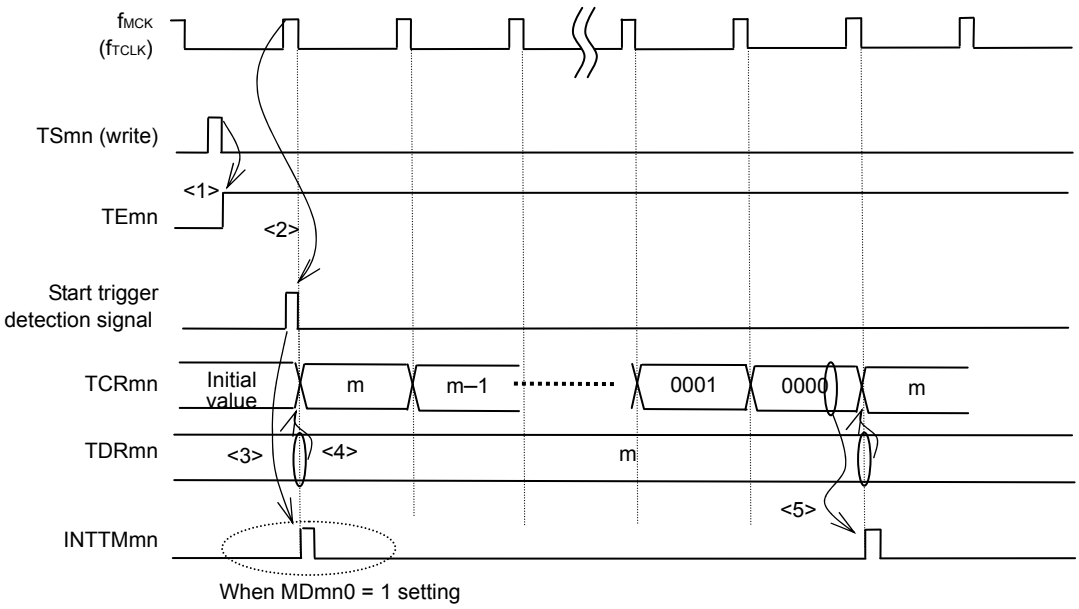

Caution In the first cycle operation of count clock after writing the TSmn bit, an error at a maximum of one clock is generated since count start delays until count clock has been generated. When the information on count start timing is necessary, an interrupt can be generated at count start by setting MDmn0 = 1.

Remark f_{MCK}, the start trigger detection signal, and INTTMmn become active between one clock in synchronization with f_{CLK}.

(2) Operation of event counter mode

<1> Timer count register mn (TCRmn) holds its initial value while operation is stopped (TEmn = 0).

<2> Operation is enabled (TEmn = 1) by writing 1 to the TSmn bit.

<3> As soon as 1 has been written to the TSmn bit and 1 has been set to the TEmn bit, the value of timer data register mn (TDRmn) is loaded to the TCRmn register to start counting.

<4> After that, the TCRmn register value is counted down according to the count clock of the valid edge of the TImn input .

Figure 7-25. Operation Timing (In Event Counter Mode)

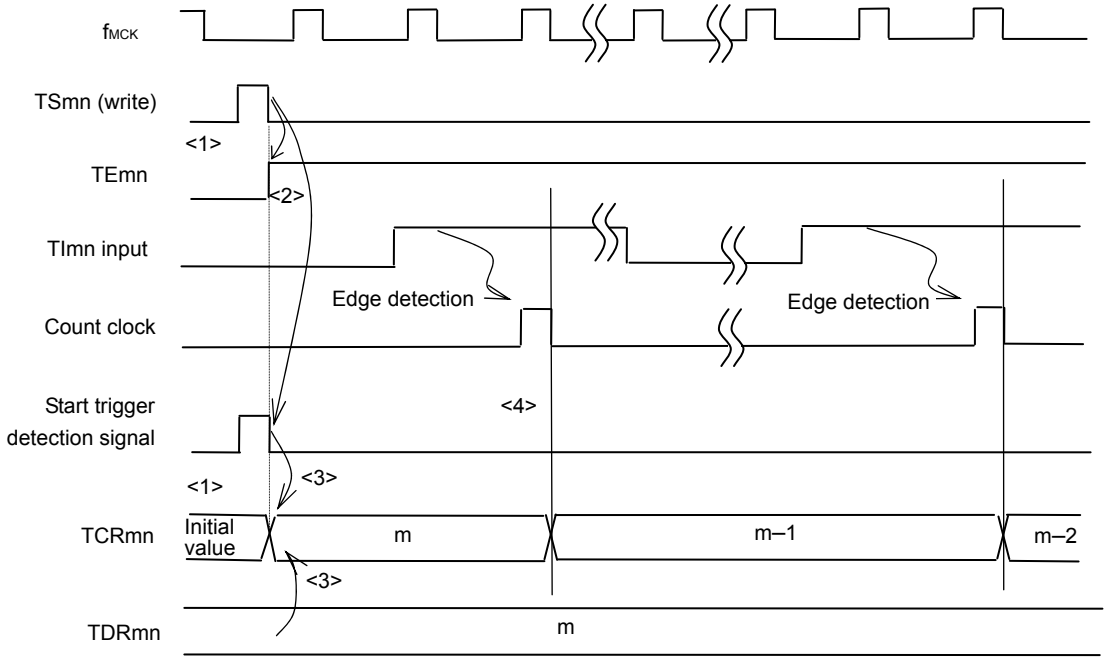

Remark The timing is shown in Figure 7-25 indicates while the noise filter is not used. By making the noise filter on-state, the edge detection becomes 2 f_{MCK} cycles (it sums up to 3 to 4 cycles) later than the normal cycle of TImn input. The error per one period occurs be the asynchronous between the period of the TImn input and that of the count clock (f_{MCK}).

(3) Operation of capture mode (input pulse interval measurement)

<1> Operation is enabled (TEmn = 1) by writing 1 to the TSmn bit.
<2> Timer count register mn (TCRmn) holds the initial value until count clock generation.
<3> A start trigger is generated at the first count clock after operation is enabled. And the value of 0000H is loaded to the TCRmn register and counting starts in the capture mode. (When the MDmn0 bit is set to 1, INTTMmn is generated by the start trigger.)
<4> On detection of the valid edge of the TImn input, the value of the TCRmn register is captured to timer data register mn (TDRmn) and INTTMmn is generated. However, this capture value is nomeaning. The TCRmn register keeps on counting from 0000H.
<5> On next detection of the valid edge of the TImn input, the value of the TCRmn register is captured to timer data register mn (TDRmn) and INTTMmn is generated.

Figure 7-26. Operation Timing (In Capture Mode : Input Pulse Interval Measurement)

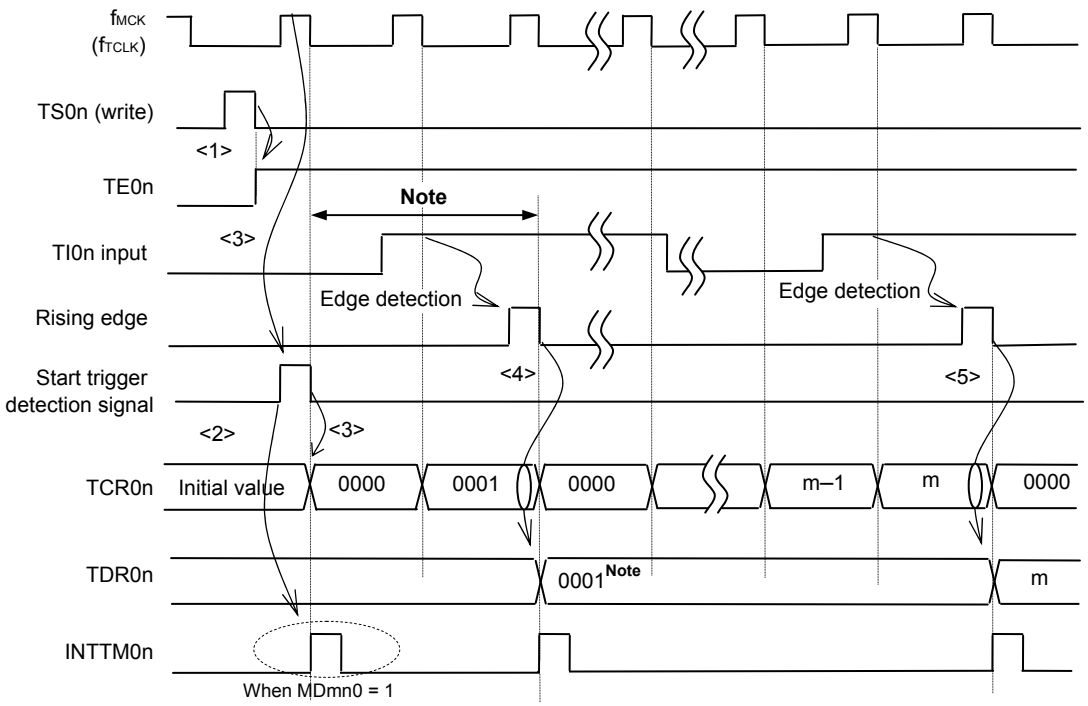

Note If a clock has been input to TImn (the trigger exists) when capturing starts, counting starts when a trigger is detected, even if no edge is detected. Therefore, the first captured value (<4>) does not determine a pulse interval (in the above figure, 0001 just indicates two clock cycles but does not determine the pulse interval) and so the user can ignore it.

Caution In the first cycle operation of count clock after writing the TSmn bit, an error at a maximum of one clock is generated since count start delays until count clock has been generated. When the information on count start timing is necessary, an interrupt can be generated at count start by setting MDmn0 = 1.

Remark The timing is shown in Figure 7-26 indicates while the noise filter is not used. By making the noise filter on-state, the edge detection becomes 2 f_{MCK} cycles (it sums up to 3 to 4 cycles) later than the normal cycle of TImn input.

(4) Operation of one-count mode

<1> Operation is enabled (TEmn = 1) by writing 1 to the TSmn bit.
<2> Timer count register mn (TCRmn) holds the initial value until start trigger generation.
<3> Rising edge of the TImn input is detected.
<4> On start trigger detection, the value of timer data register mn (TDRmn) is loaded to the TCRmn register and count starts.
<5> When the TCRmn register counts down and its count value is 0000H, INTTMmn is generated and the value of the TCRmn register becomes FFFFH and counting stops.

Figure 7-27. Operation Timing (In One-count Mode)

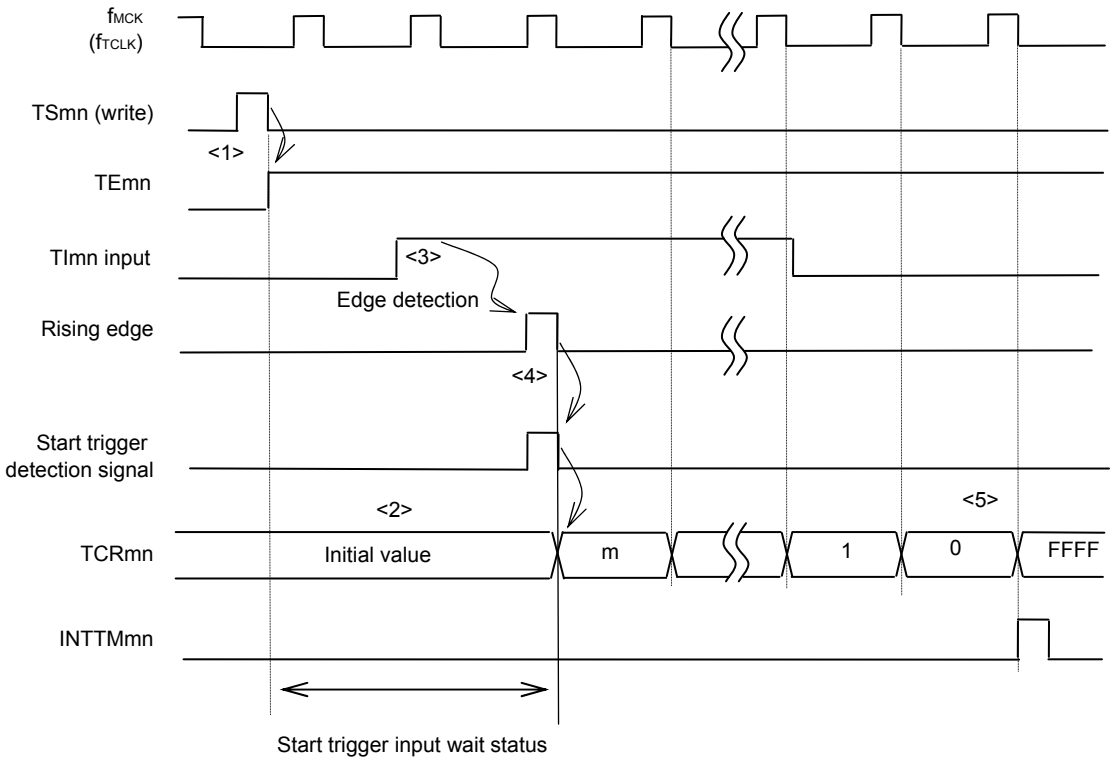

Remark The timing is shown in Figure 7-27 indicates while the noise filter is not used. By making the noise filter on-state, the edge detection becomes 2 f_{MCK} cycles (it sums up to 3 to 4 cycles) later than the normal cycle of TImn input. The error per one period occurs be the asynchronous between the period of the TImn input and that of the count clock (f_{MCK}).

(5) Operation of capture & one-count mode (high-level width measurement)

<1> Operation is enabled (TEmn = 1) by writing 1 to the TSmn bit of timer channel start register m (TSm).
<2> Timer count register mn (TCRmn) holds the initial value until start trigger generation.
<3> Rising edge of the TImn input is detected.
<4> On start trigger detection, the value of 0000H is loaded to the TCRmn register and count starts.
<5> On detection of the falling edge of the TImn input, the value of the TCRmn register is captured to timer data register mn (TDRmn) and INTTMmn is generated.

Figure 7-28. Operation Timing (In Capture & One-count Mode : High-level Width Measurement)

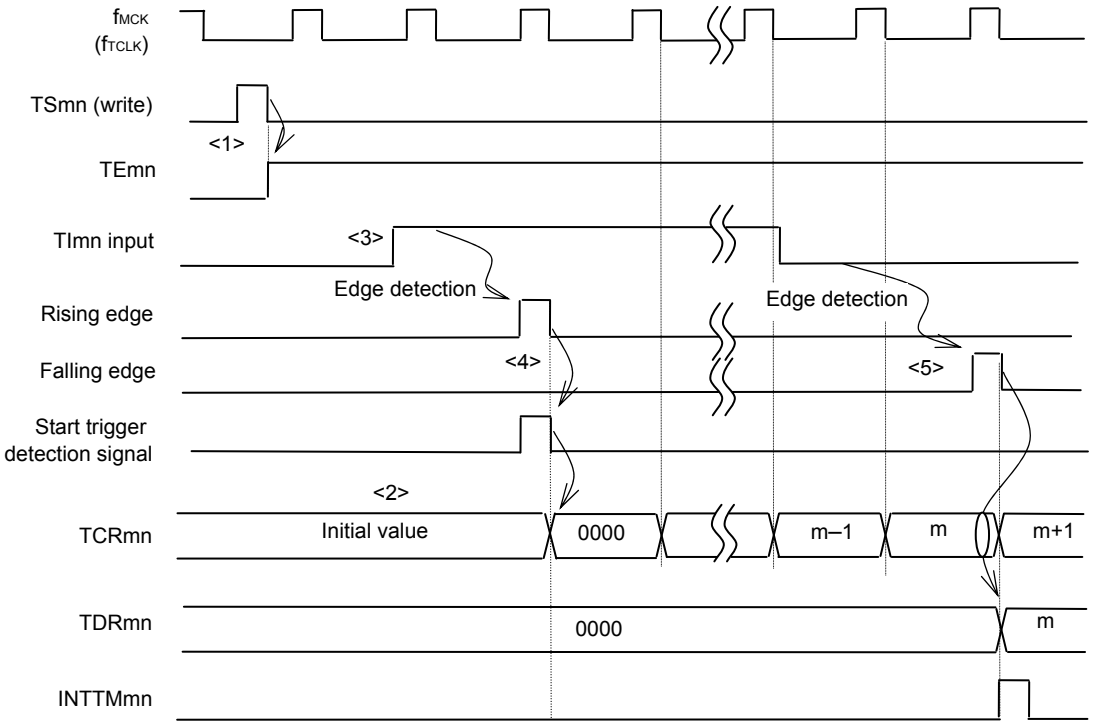

Remark The timing is shown in Figure 7-28 indicates while the noise filter is not used. By making the noise filter on-state, the edge detection becomes 2 f_{MCK} cycles (it sums up to 3 to 4 cycles) later than the normal cycle of TImn input. The error per one period occurs be the asynchronous between the period of the TImn input and that of the count clock (f_{MCK}).

7.6 Channel Output (TO0n pin) Control

7.6.1 TO0n pin output circuit configuration

Figure 7-29. Output Circuit Configuration

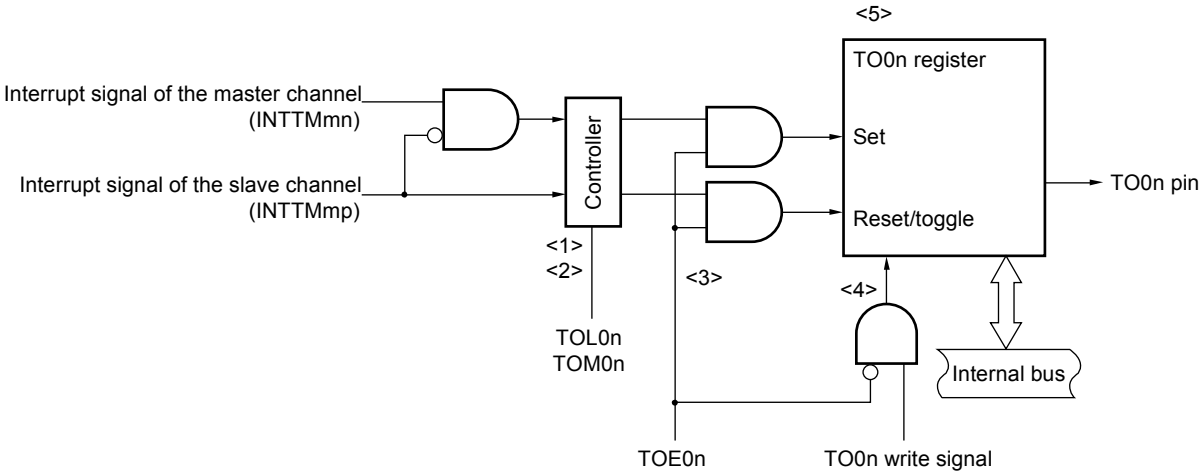

The following describes the TO0n pin output circuit.

<1> When TOM0n = 0 (master channel output mode), the set value of timer output level register 0 (TOL0) is ignored and only INTTMmp (slave channel timer interrupt) is transmitted to timer output register 0 (TO0).

<2> When TOM0n = 1 (slave channel output mode), both INTTMmn (master channel timer interrupt) and INTTMmp (slave channel timer interrupt) are transmitted to the TO0 register.
At this time, the TOL0 register becomes valid and the signals are controlled as follows:

When TOL0n = 0: Positive logic output (INTTMmn → set, INTTMmp → reset)
When TOL0n = 1: Negative logic output (INTTMmn → reset, INTTMmp → set)

When INTTMmn and INTTMmp are simultaneously generated, (0% output of PWM), INTTMmp (reset signal) takes priority, and INTTMmn (set signal) is masked.

<3> While timer output is enabled (TOE0n = 1), INTTMmn (master channel timer interrupt) and INTTMmp (slave channel timer interrupt) are transmitted to the TO0 register. Writing to the TO0 register (TO0n write signal) becomes invalid.
When TOE0n = 1, the TO0n pin output never changes with signals other than interrupt signals.
To initialize the TO0n pin output level, it is necessary to set timer operation is stopped (TOE0n = 0) and to write a value to the TO0 register.

<4> While timer output is disabled (TOE0n = 0), writing to the TO0n bit to the target channel (TO0n write signal) becomes valid. When timer output is disabled (TOE0n = 0), neither INTTMmn (master channel timer interrupt) nor INTTMmp (slave channel timer interrupt) is transmitted to the TO0 register.

<5> The TO0 register can always be read, and the TO0n pin output level can be checked.

Remark m: Unit number (m = 0)
n: Channel number
n = 0 to 7 (n = 0, 2, 4, 6 for master channel)
p: Slave channel number
n < p ≤ 7

7.6.2 TO0n pin output setting

The following figure shows the procedure and status transition of the TO0n output pin from initial setting to timer operation start.

Figure 7-30. Status Transition from Timer Output Setting to Operation Start

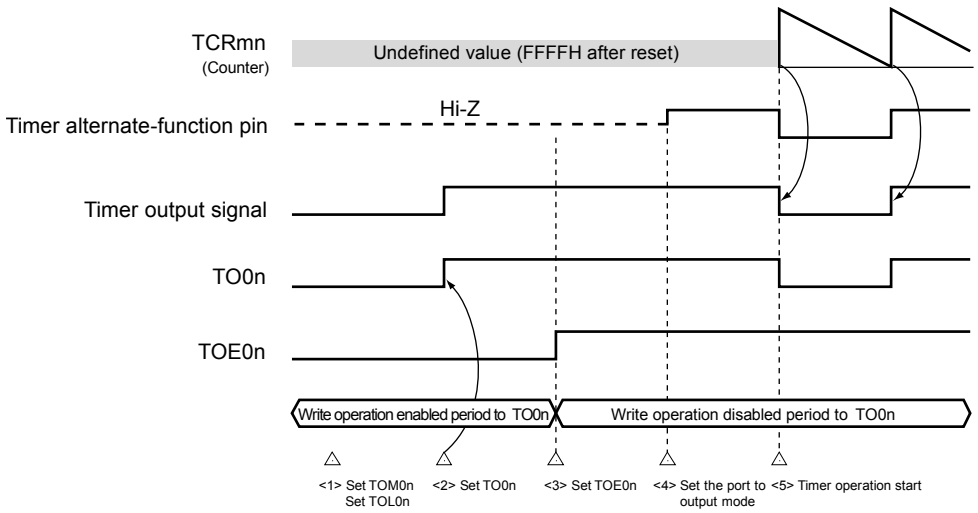

<1> The operation mode of timer output is set.

- TOM0n bit (0: Master channel output mode, 1: Slave channel output mode)
- TOL0n bit (0: Positive logic output, 1: Negative logic output)

<2> The timer output signal is set to the initial status by setting timer output register 0 (TO0).

<3> The timer output operation is enabled by writing 1 to the TOE0n bit (writing to the TO0 register is disabled).

<4> The port is set to digital I/O by port mode control register (PMCxx) (see **7.3.14 Registers controlling port functions of pins to be used for timer I/O**).

<5> The port I/O setting is set to output (see **7.3.14 Registers controlling port functions of pins to be used for timer I/O**).

<6> The timer operation is enabled (TSmn = 1).

Remark m: Unit number (m = 0), n: Channel number (n = 0 to 7)

7.6.3 Cautions on channel output operation

(1) Changing values set in the registers TO0, TOE0, and TOL0 during timer operation

Since the timer operations (operations of timer count register mn (TCRmn) and timer data register mn (TDRmn)) are independent of the TO0n output circuit and changing the values set in timer output register 0 (TO0), timer output enable register 0 (TOE0), and timer output level register 0 (TOL0) does not affect the timer operation, the values can be changed during timer operation. To output an expected waveform from the TO0n pin by timer operation, however, set the TO0, TOE0, TOL0, and TOMm registers to the values stated in the register setting example of each operation shown by 7.7 and 7.8.

When the values set to the TOE0 and TOM0 registers (but not the TO0 register) are changed close to the occurrence of the timer interrupt (INTTMmn) of each channel, the waveform output to the TO0n pin might differ, depending on whether the values are changed immediately before or immediately after the timer interrupt (INTTMmn) occurs.

Remark m: Unit number (m = 0), n: Channel number (n = 0 to 7)

(2) Default level of TO0n pin and output level after timer operation start

The change in the output level of the TO0n pin when timer output register 0 (TO0) is written while timer output is disabled (TOE0n = 0), the initial level is changed, and then timer output is enabled (TOE0n = 1) before port output is enabled, is shown below.

(a) When operation starts with master channel output mode (TOM0n = 0) setting

The setting of timer output level register m (TOL0) is invalid when master channel output mode (TOM0n = 0). When the timer operation starts after setting the default level, the toggle signal is generated and the output level of the TO0n pin is reversed.

Figure 7-31. TO0n Pin Output Status at Toggle Output (TOM0n = 0)

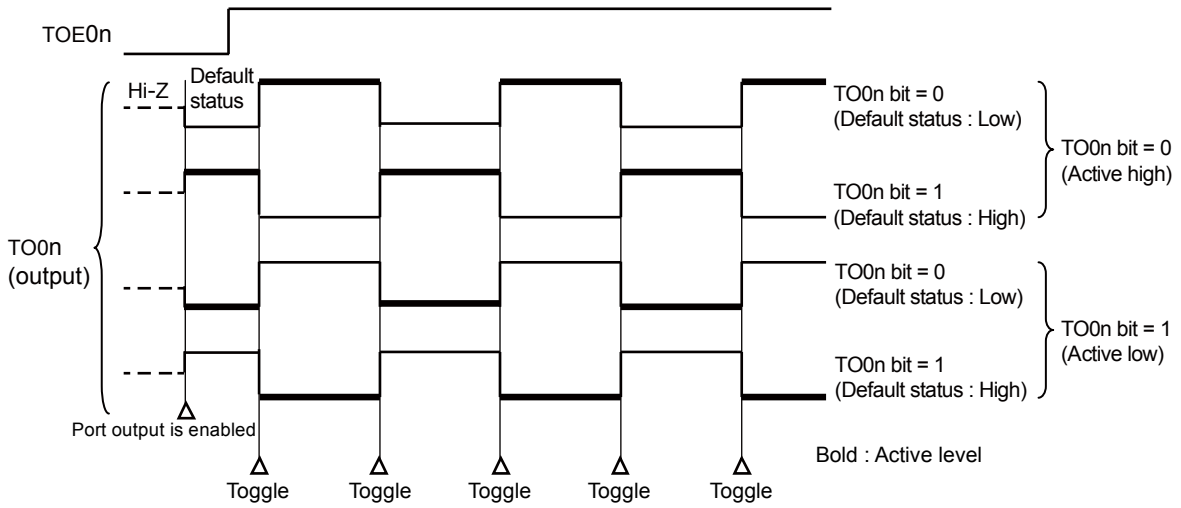

Remarks 1. Toggle: Reverse TO0n pin output status

2. n: Channel number (n = 0 to 7)

(b) When operation starts with slave channel output mode (TOM0p = 1) setting (PWM output))

When slave channel output mode (TOM0p = 1), the active level is determined by timer output level register 0 (TOL0) setting.

Figure 7-32. TO0p Pin Output Status at PWM Output (TOM0p = 1)

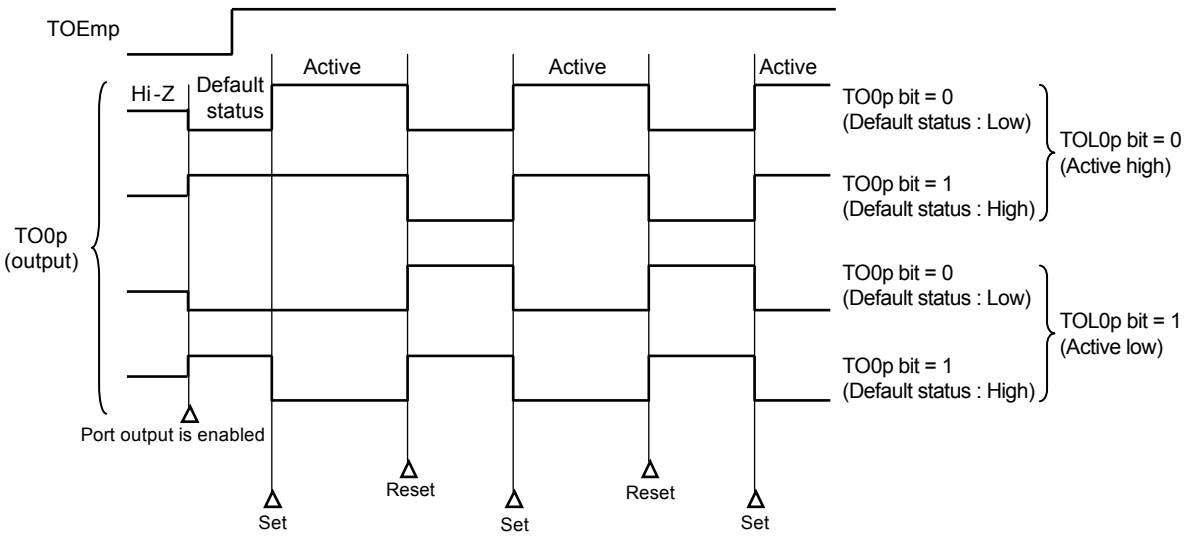

Remarks 1. Set: The output signal of the TOmp pin changes from inactive level to active level.
Reset: The output signal of the TOmp pin changes from active level to inactive level.

2. p: Channel number (p = 1 to 7)

(3) Operation of TO0n pin in slave channel output mode (TOM0n = 1)

(a) When timer output level register 0 (TOL0) setting has been changed during timer operation

When the TOL0 register setting has been changed during timer operation, the setting becomes valid at the generation timing of the TO0n pin change condition. Rewriting the TOL0 register does not change the output level of the TO0n pin.

The operation when TOM0n is set to 1 and the value of the TOL0 register is changed while the timer is operating (TE0n = 1) is shown below.

Figure 7-33. Operation when TOL0 Register Has Been Changed Contents during Timer Operation

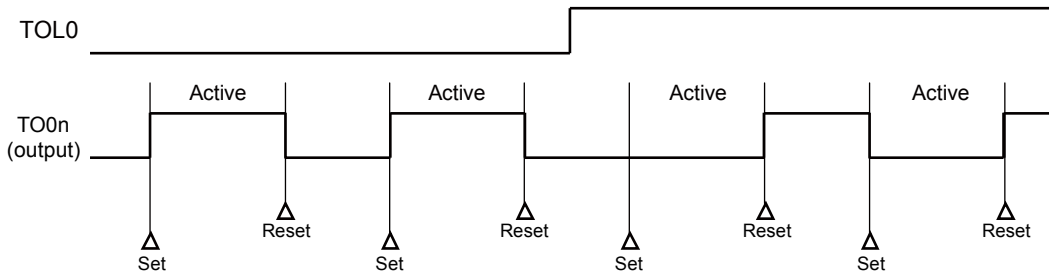

Remarks 1. Set: The output signal of the TO0n pin changes from inactive level to active level.
Reset: The output signal of the TO0n pin changes from active level to inactive level.

2. n: Channel number (n = 0 to 7)

(b) Set/reset timing

To realize 0%/100% output at PWM output, the TOmn pin/TOmn bit set timing at master channel timer interrupt (INTTMmn) generation is delayed by 1 count clock by the slave channel.

If the set condition and reset condition are generated at the same time, a higher priority is given to the latter.

Figure 7-34 shows the set/reset operating statuses where the master/slave channels are set as follows.

Master channel: TOEmn = 1, TOMmn = 0, TOLmn = 0
Slave channel: TOEmp = 1, TOMmp = 1, TOLmp = 0

Figure 7-34. Set/Reset Timing Operating Statuses

(1) Basic operation timing

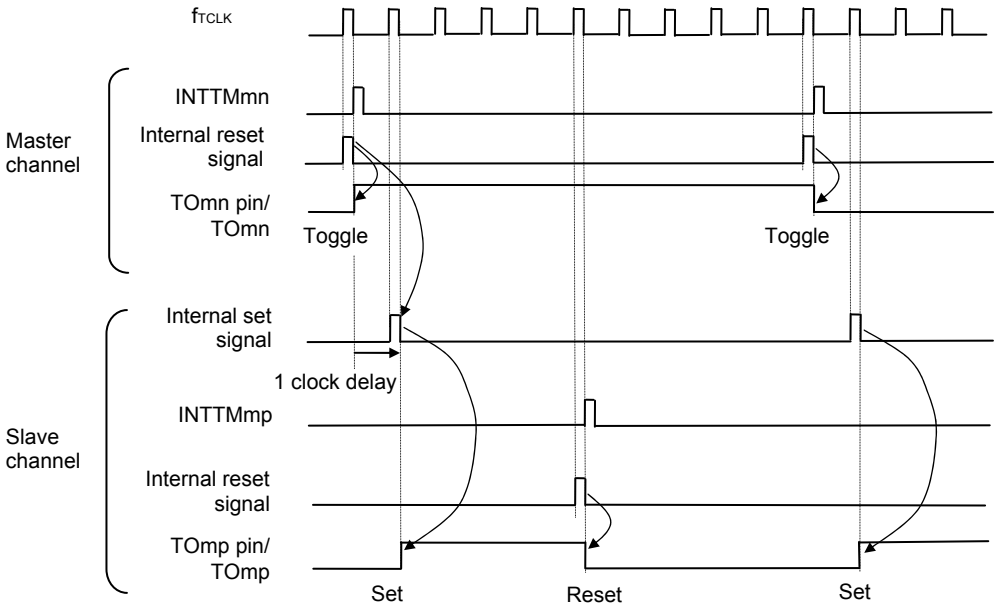

(2) Operation timing when 0 % duty

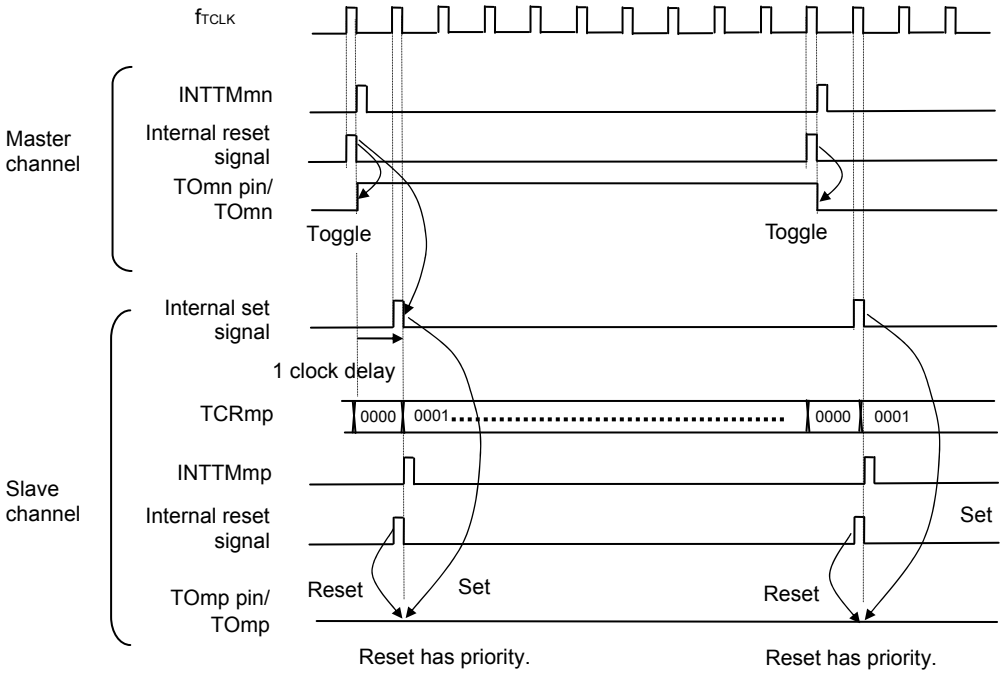

Remarks 1. Internal reset signal: TOmn pin reset/toggle signal
Internal set signal: TOmn pin set signal

2. m: Unit number (m = 0)
n: Channel number
n = 0 to 7 (n = 0, 2, 4, 6 for master channel)
p: Slave channel number
n < p ≤ 7

7.6.4 Collective manipulation of TO0n bit

In timer output register 0 (TO0), the setting bits for all the channels are located in one register in the same way as timer channel start register m (TSm). Therefore, the TO0n bit of all the channels can be manipulated collectively.

Only the desired bits can also be manipulated by enabling writing only to the TO0n bits (TOE0n = 0) that correspond to the relevant bits of the channel used to perform output (TO0n).

Figure 7-35 Example of TO0n Bit Collective Manipulation

Before writing

TO0	0	0	0	0	0	0	0	0	TO07 0	TO06 0	TO05 1	TO04 0	TO03 0	TO02 0	TO01 1	TO00 0
TOE0	0	0	0	0	0	0	0	0	TOE07 0	TOE06 0	TOE05 1	TOE04 0	TOE03 1	TOE02 1	TOE01 1	TOE00 1

Data to be written

	0	0	0	0	0	0	0	0	1	1	0	0	0	0	1	1
									○	○	×	○	×	×	×	×

After writing

TO0	0	0	0	0	0	0	0	0	TO07 1	TO06 1	TO05 1	TO04 0	TO03 0	TO02 0	TO01 1	TO00 0

Writing is done only to the TO0n bit with TOE0n = 0, and writing to the TO0n bit with TOE0n = 1 is ignored.

TO0n (channel output) to which TOE0n = 1 is set is not affected by the write operation. Even if the write operation is done to the TO0n bit, it is ignored and the output change by timer operation is normally done.

Figure 7-36. TO0n Pin Statuses by Collective Manipulation of TO0n Bit

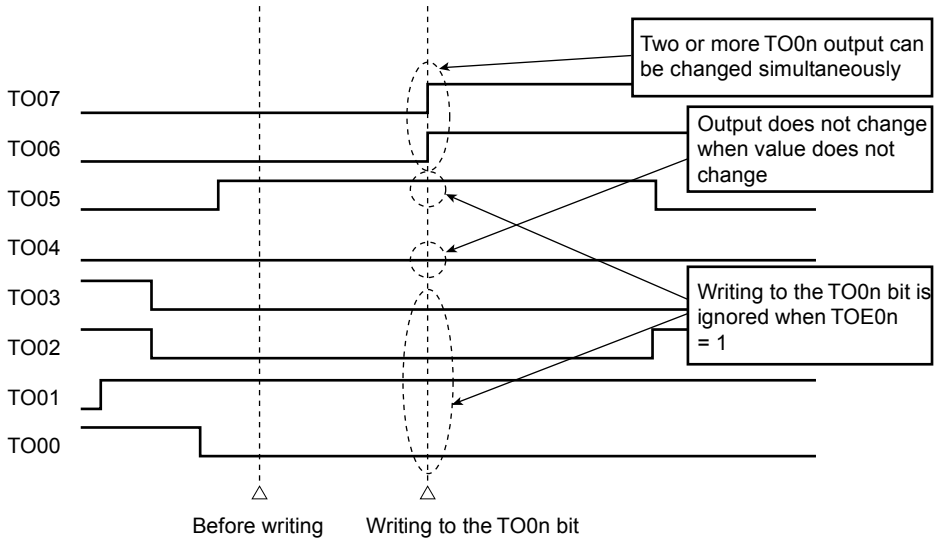

Remark m: Unit number (m = 0), n: Channel number (n = 0 to 7)

7.6.5 Timer interrupt and TO0n pin output at operation start

In the interval timer mode or capture mode, the MDmn0 bit in timer mode register mn (TMRmn) sets whether or not to generate a timer interrupt at count start.

When MDmn0 is set to 1, the count operation start timing can be known by the timer interrupt (INTTMmn) generation.

In the other modes, neither timer interrupt at count operation start nor TO0n output is controlled.

Figure 7-37 shows operation examples when the interval timer mode (TOE0n = 1, TOM0n = 0) is set.

Figure 7-37. Operation examples of timer interrupt at count operation start and TO0n output

(a) When MDmn0 is set to 1

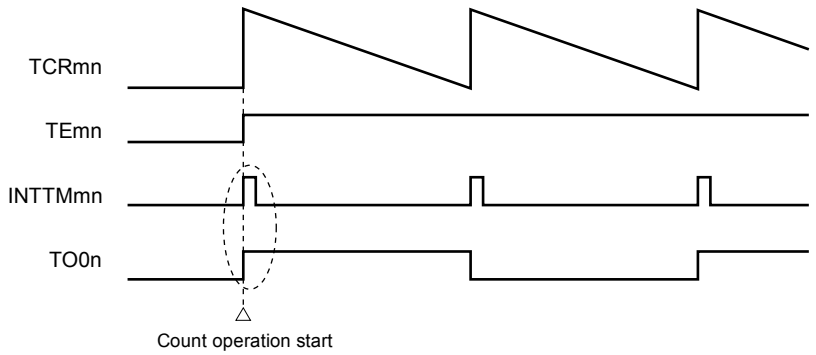

(b) When MDmn0 is set to 0

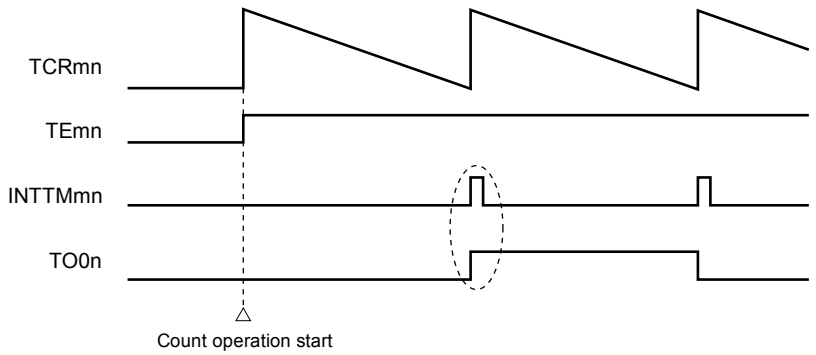

When MDmn0 is set to 1, a timer interrupt (INTTMmn) is output at count operation start, and TO0n performs a toggle operation.

When MDmn0 is set to 0, a timer interrupt (INTTMmn) is not output at count operation start, and TO0n does not change either. After counting one cycle, INTTMmn is output and TO0n performs a toggle operation.

Remark m: Unit number (m = 0), n: Channel number (n = 0 to 7)

7.7 Timer Input (TI0n) Control

7.7.1 TI0n input circuit configuration

A signal is input from a timer input pin, goes through a noise filter and an edge detector, and is sent to a timer controller. Enable the noise filter for the pin in need of noise removal. The following shows the configuration of the input circuit.

Figure 7-38. Input Circuit Configuration

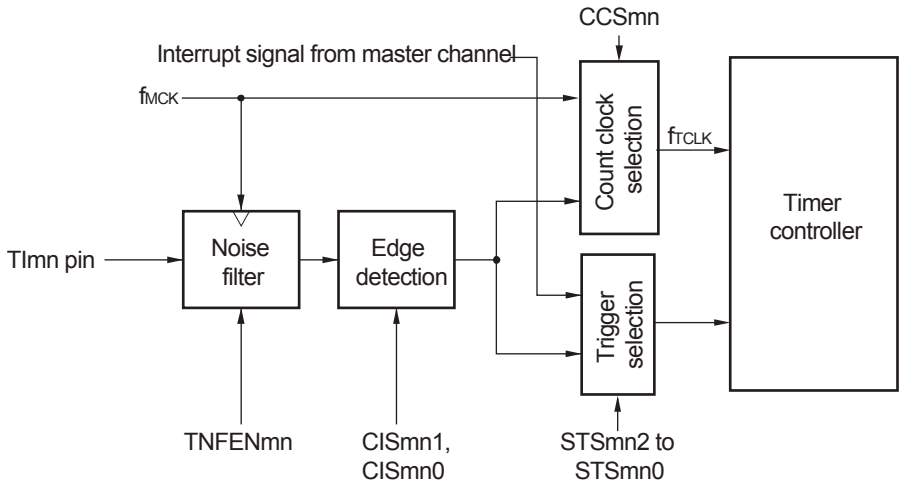

7.7.2 Noise filter

When the noise filter is disabled, the input signal is only synchronized with the operating clock (f_{MCK}) for channel n. When the noise filter is enabled, after synchronization with the operating clock (f_{MCK}) for channel n, whether the signal keeps the same value for two clock cycles is detected. The following shows differences in waveforms through TI0n input pin with the noise filter between when the noise filter is enabled and disabled.

Figure 7-39. Sampling Waveforms through TI0n Input Pin with Noise Filter Enabled and Disabled

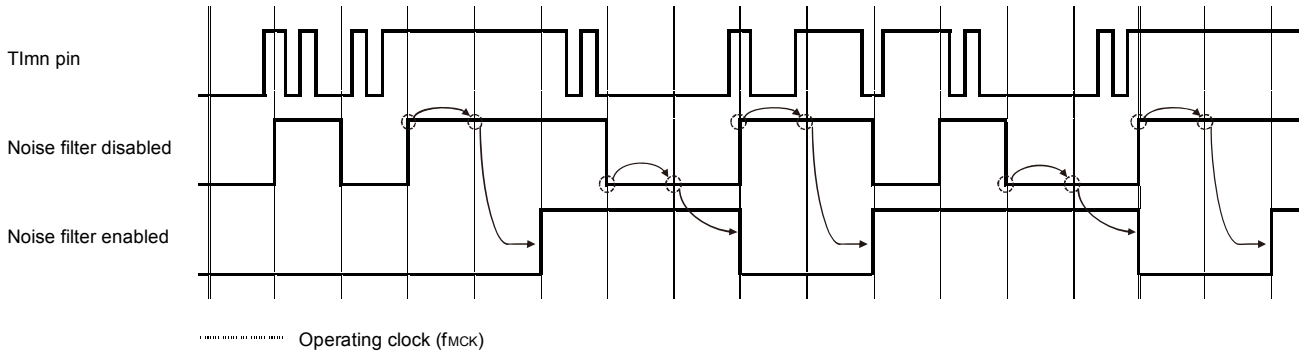

7.7.3 Cautions on channel input operation

When a timer input pin is set as unused, the operating clock is not supplied to the noise filter. Therefore, after settings are made to use the timer input pin, the following wait time is necessary before a trigger is specified to enable operation of the channel corresponding to the timer input pin.

(1) Noise filter is disabled

When bits 12 (CCSmn), 9 (STSmn1), and 8 (STSmn0) in the timer mode register mn (TMRmn) are 0 and then one of them is set to 1, wait for at least two cycles of the operating clock (f_{MCK}), and then set the operation enable trigger bit in the timer channel start register (TSm).

(2) Noise filter is enabled

When bits 12 (CCSmn), 9 (STSmn1), and 8 (STSmn0) in the timer mode register mn (TMRmn) are all 0 and then one of them is set to 1, wait for at least four cycles of the operating clock (f_{MCK}), and then set the operation enable trigger bit in the timer channel start register (TSm).

7.8 Independent Channel Operation Function of Timer Array Unit

7.8.1 Operation as interval timer/square wave output

(1) Interval timer

The timer array unit can be used as a reference timer that generates INTTMmn (timer interrupt) at fixed intervals.
The interrupt generation period can be calculated by the following expression.

Generation period of INTTMmn (timer interrupt) = Period of count clock × (Set value of TDRmn + 1)

(2) Operation as square wave output

TO0n performs a toggle operation as soon as INTTMmn has been generated, and outputs a square wave with a duty factor of 50%.
The period and frequency for outputting a square wave from TO0n can be calculated by the following expressions.

● Period of square wave output from TO0n = Period of count clock × (Set value of TDRmn + 1) × 2
● Frequency of square wave output from TO0n = Frequency of count clock/{(Set value of TDRmn + 1) × 2}

Timer count register mn (TCRmn) operates as a down counter in the interval timer mode.
The TCRmn register loads the value of timer data register mn (TDRmn) at the first count clock after the channel start trigger bit (TSmn, TSHm1, TSHm3) of timer channel start register m (TSm) is set to 1. If the MDmn0 bit of timer mode register mn (TMRmn) is 0 at this time, INTTMmn is not output and TO0n is not toggled. If the MDmn0 bit of the TMRmn register is 1, INTTMmn is output and TO0n is toggled.
After that, the TCRmn register count down in synchronization with the count clock.
When TCRmn = 0000H, INTTMmn is output and TO0n is toggled at the next count clock. At the same time, the TCRmn register loads the value of the TDRmn register again. After that, the same operation is repeated.
The TDRmn register can be rewritten at any time. The new value of the TDRmn register becomes valid from the next period.

Remark m: Unit number (m = 0), n: Channel number (n = 0 to 7)

Figure 7-40. Block Diagram of Operation as Interval Timer/Square Wave Output

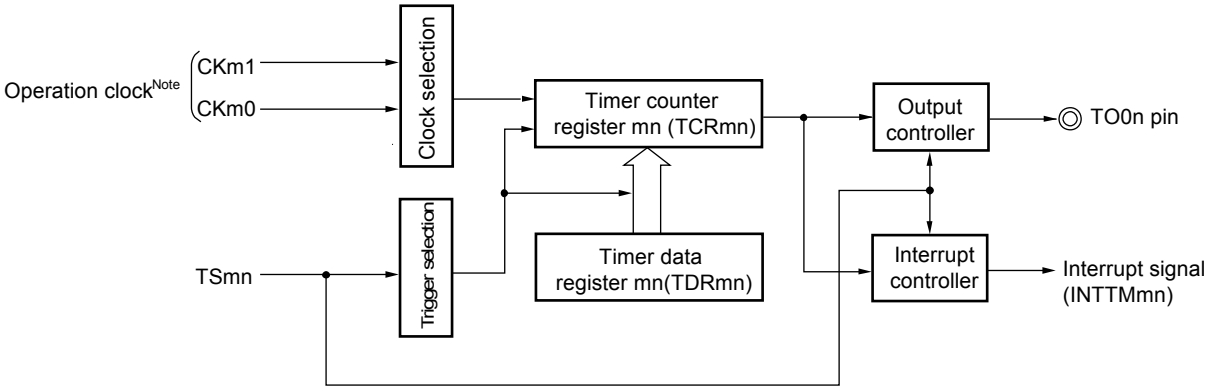

Note When channels 1 and 3, the clock can be selected from CKm0, CKm1, CKm2 and CKm3.

Figure 7-41. Example of Basic Timing of Operation as Interval Timer/Square Wave Output (MDmn0 = 1)

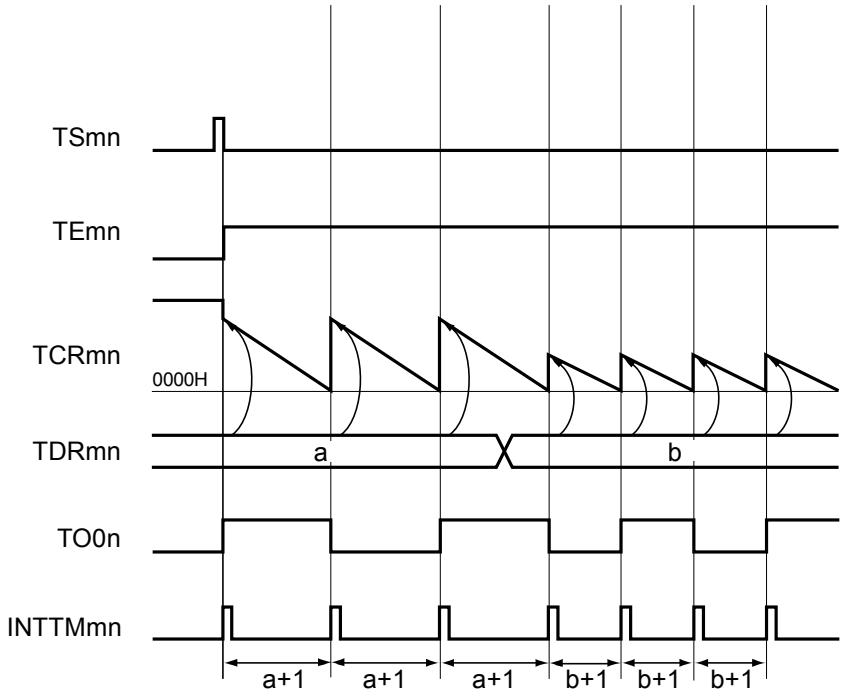

Remarks 1. m: Unit number (m = 0), n: Channel number (n = 0 to 7)

2. TSmn: Bit n of timer channel start register m (TSm)

TEmn: Bit n of timer channel enable status register m (TEm)

TCRmn: Timer count register mn (TCRmn)

TDRmn: Timer data register mn (TDRmn)

TO0n: TO0n pin output signal

Figure 7-42. Example of Set Contents of Registers During Operation as Interval Timer/Square Wave Output (1/2)

(a) Timer mode register mn (TMRmn)

	15	14	13	12	11	10	9	8	7	6	5	4	3	2	1	0
TMRmn	CKSmn1	CKSmn0		CCSmn	M/S Note	STSmn2	STSmn1	STSmn0	CISmn1	CISmn0			MDmn3	MDmn2	MDmn1	MDmn0
	1/0	1/0	0	0	0/1	0	0	0	0	0	0	0	0	0	0	1/0

Operation mode of channel n
000B: Interval timer

Setting of operation when counting is started
0: Neither generates INTTMmn nor inverts timer output when counting is started.
1: Generates INTTMmn and inverts timer output when counting is started.

Selection of TImn pin input edge
00B: Sets 00B because these are not used.

Start trigger selection
000B: Selects only software start.

Setting of MASTERmn bit (channels 2, 4, 6)
0: Independent channel operation function.
Setting of SPLITmn bit (channels 1, 3)
0: 16-bit timer mode
1: 8-bit timer mode

Count clock selection
0: Selects operation clock (f_{MCK}).

Operation clock (f_{MCK}) selection
00B: Selects CKm0 as operation clock of channel n.
10B: Selects CKm1 as operation clock of channel n.
01B: Selects CKm2 as operation clock of channels 1, 3 (This can only be selected channels 1 and 3).
11B: Selects CKm3 as operation clock of channels 1, 3 (This can only be selected channels 1 and 3).

(b) Timer output register 0 (TO0)

	Bit n
TO0	TO0n
	1/0

0: Outputs 0 from TO0n.
1: Outputs 1 from TO0n.

(c) Timer output enable register 0 (TOE0)

	Bit n
TOE0	TOE0n
	1/0

0: Stops the TO0n output operation by counting operation.
1: Enables the TO0n output operation by counting operation.

Note TMRm2, TMRm4, TMRm6: MASTERmn bit
TMRm1, TMRm3: SPLITmn bit
TMRm0, TMRm5, TMRm7: Fixed to 0

Remark m: Unit number (m = 0), n: Channel number (n = 0 to 7)

Figure 7-42. Example of Set Contents of Registers During Operation as Interval Timer/Square Wave Output (2/2)

(d) Timer output level register 0 (TOL0)

	Bit n
TOL0	TOL0n 0

0: Cleared to 0 when TOM0n = 0 (master channel output mode)

(e) Timer output mode register 0 (TOM0)

	Bit n
TOM0	TOM0n 0

0: Sets master channel output mode.

Remark m: Unit number (m = 0), n: Channel number (n = 0 to 7)

Figure 7-43. Operation Procedure of Interval Timer/Square Wave Output Function (1/2)

	Software Operation	Hardware Status
TAU default setting		Power-off status (Clock supply is stopped and writing to each register is disabled.)
	Sets the TAUmEN bit of peripheral enable register 0 (PER0) to 1.	Power-on status. Each channel stops operating. (Clock supply is started and writing to each register is enabled.)
	Sets timer clock select register m (TPSm). Determines clock frequencies of CKm0 to CKm3.	
Channel default setting	Sets timer mode register mn (TMRmn) (determines operation mode of channel). Sets interval (period) value to timer data register mn (TDRmn).	Channel stops operating. (Clock is supplied and some power is consumed.)
	To use the TO0n output Clears the TOM0n bit of timer output mode register 0 (TOM0) to 0 (master channel output mode). Clears the TOL0n bit to 0. Sets the TO0n bit and determines default level of the TO0n output.	The TO0n pin goes into Hi-Z output state. The TO0n default setting level is output when the port mode register is in the output mode and the port register is 0.
	Sets the TOE0n bit to 1 and enables operation of TO0n. Clears the port register and port mode register to 0.	TO0n does not change because channel stops operating. The TO0n pin outputs the TO0n set level.
Operation start	(Sets the TOE0n bit to 1 only if using TO0n output and resuming operation.). Sets the TSmn (TSHm1, TSHm3) bit to 1. The TSmn (TSHm1, TSHm3) bit automatically returns to 0 because it is a trigger bit.	TEmn (TEHm1, TEHm3) = 1, and count operation starts. Value of the TDRmn register is loaded to timer count register mn (TCRmn). INTTMmn is generated and TO0n performs toggle operation if the MDmn0 bit of the TMRmn register is 1.
During operation	Set values of the TMRmn register, TOM0n, and TOL0n bits cannot be changed. Set value of the TDRmn register can be changed. The TCRmn register can always be read. The TSRmn register is not used. Set values of the TO0 and TOE0 registers can be changed.	Counter (TCRmn) counts down. When count value reaches 0000H, the value of the TDRmn register is loaded to the TCRmn register again and the count operation is continued. By detecting TCRmn = 0000H, INTTMmn is generated and TO0n performs toggle operation. After that, the above operation is repeated.
Operation stop	The TTmn (TTHm1, TTHm3) bit is set to 1. The TTmn (TTHm1, TTHm3) bit automatically returns to 0 because it is a trigger bit.	TEmn (TEHm1, TEHm3), and count operation stops. The TCRmn register holds count value and stops. The TOmn output is not initialized but holds current status.
	The TOE0n bit is cleared to 0 and value is set to the TO0n bit.	The TO0n pin outputs the TO0n bit set level.

Operation is resumed.

(**Remark** is listed on the next page.)

Figure 7-43. Operation Procedure of Interval Timer/Square Wave Output Function (2/2)

	Software Operation	Hardware Status
TAU stop	To hold the TO0n pin output level Clears the TO0n bit to 0 after the value to be held is set to the port register. →	The TO0n pin output level is held by port function.
	When holding the TO0n pin output level is not necessary Setting not required.	
	The TAUmEN bit of the PER0 register is cleared to 0. →	Power-off status All circuits are initialized and SFR of each channel is also initialized. (The TO0n bit is cleared to 0 and the TO0n pin is set to port mode.)

Remark m: Unit number (m = 0), n: Channel number (n = 0 to 7)

7.8.2 Operation as external event counter

The timer array unit can be used as an external event counter that counts the number of times the valid input edge (external event) is detected in the TImn pin. When a specified count value is reached, the event counter generates an interrupt. The specified number of counts can be calculated by the following expression.

Specified number of counts = Set value of TDRmn + 1

Timer count register mn (TCRmn) operates as a down counter in the event counter mode.

The TCRmn register loads the value of timer data register mn (TDRmn) by setting any channel start trigger bit (TSmn, TSHm1, TSHm3) of timer channel start register m (TSm) to 1.

The TCRmn register counts down each time the valid input edge of the TImn pin has been detected. When TCRmn = 0000H, the TCRmn register loads the value of the TDRmn register again, and outputs INTTMmn.

After that, the above operation is repeated.

An irregular waveform that depends on external events is output from the TO0n pin. Stop the output by setting the TOE0n bit of timer output enable register 0 (TOE0) to 0.

The TDRmn register can be rewritten at any time. The new value of the TDRmn register becomes valid during the next count period.

Figure 7-44. Block Diagram of Operation as External Event Counter

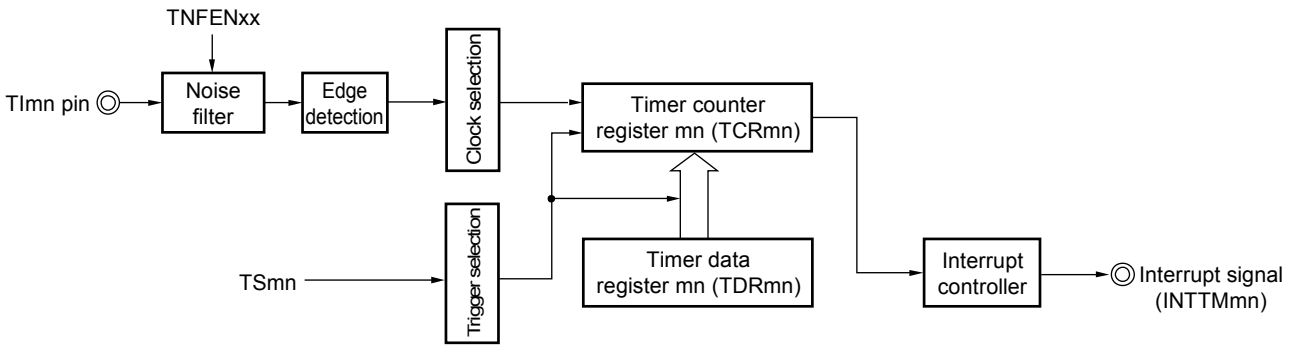

Remark m: Unit number (m = 0), n: Channel number (n = 0 to 7)

Figure 7-45. Example of Basic Timing of Operation as External Event Counter

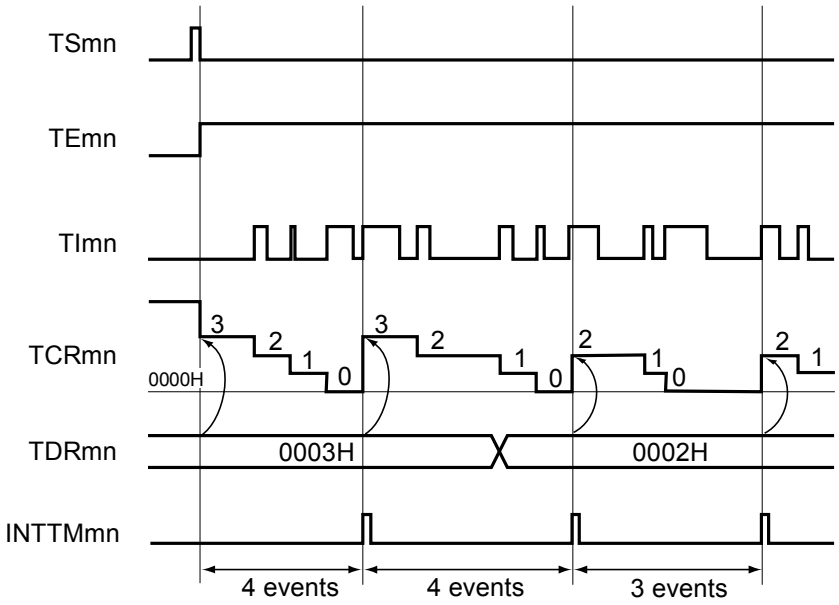

Remarks 1. m: Unit number (m = 0), n: Channel number (n = 0 to 7)

2. TSmn: Bit n of timer channel start register m (TSm)

TEmn: Bit n of timer channel enable status register m (TEm)

TImn: TImn pin input signal

TCRmn: Timer count register mn (TCRmn)

TDRmn: Timer data register mn (TDRmn)

Figure 7-46. Example of Set Contents of Registers in External Event Counter Mode (1/2)

(a) Timer mode register mn (TMRmn)

	15	14	13	12	11	10	9	8	7	6	5	4	3	2	1	0
TMRmn	CKSmn1	CKSmn0		CCSmn	M/S[Note]	STSmn2	STSmn1	STSmn0	CISmn1	CISmn0			MDmn3	MDmn2	MDmn1	MDmn0
	1/0	1/0	0	1	0/1	0	0	0	1/0	1/0	0	0	0	1	1	0

Operation mode of channel n
011B: Event count mode

Setting of operation when counting is started
0: Neither generates INTTMmn nor inverts timer output when counting is started.

Selection of TImn pin input edge
00B: Detects falling edge.
01B: Detects rising edge.
10B: Detects both edges.
11B: Setting prohibited

Start trigger selection
000B: Selects only software start.

Setting of MASTERmn bit (channels 2, 4, 6)
0: Independent channel operation function.
Setting of SPLITmn bit (channels 1, 3)
0: 16-bit timer mode
1: 8-bit timer mode

Count clock selection
1: Selects the TImn pin input valid edge.

Operation clock (f_{MCK}) selection
00B: Selects CKm0 as operation clock of channel n.
10B: Selects CKm1 as operation clock of channel n.
01B: Selects CKm2 as operation clock of channels 1, 3 (This can only be selected channels 1 and 3).
11B: Selects CKm3 as operation clock of channels 1, 3 (This can only be selected channels 1 and 3).

(b) Timer output register 0 (TO0)

	Bit n
TO0	TO0n
	0

0: Outputs 0 from TO0n.

(c) Timer output enable register 0 (TOE0)

	Bit n
TOE0	TOE0n
	0

0: Stops the TO0n output operation by counting operation.

Note TMRm2, TMRm4, TMRm6: MASTERmn bit
TMRm1, TMRm3: SPLITmn bit
TMRm0, TMRm5, TMRm7: Fixed to 0

Remark m: Unit number (m = 0), n: Channel number (n = 0 to 7)

Figure 7-46. Example of Set Contents of Registers in External Event Counter Mode (2/2)

(d) Timer output level register 0 (TOL0)

	Bit n
TOL0	TOL0n 0

0: Cleared to 0 when TOM0n = 0 (master channel output mode).

(e) Timer output mode register 0 (TOM0)

	Bit n
TOM0	TOM0n 0

0: Sets master channel output mode.

Remark m: Unit number (m = 0), n: Channel number (n = 0 to 7)

Figure 7-47. Operation Procedure When External Event Counter Function Is Used

	Software Operation	Hardware Status
TAU default setting		Power-off status (Clock supply is stopped and writing to each register is disabled.)
	Sets the TAUmEN bit of peripheral enable register 0 (PER0) to 1. →	Power-on status. Each channel stops operating. (Clock supply is started and writing to each register is enabled.)
	Sets timer clock select register m (TPSm). Determines clock frequencies of CKm0 to CKm3.	
Channel default setting	Sets the corresponding bit of the noise filter enable register 1 (NFEN1) to 0 (off) or 1 (on). Sets timer mode register mn (TMRmn) (determines operation mode of channel). Sets number of counts to timer data register mn (TDRmn). Clears the TOE0n bit of timer output enable register 0 (TOE0) to 0.	Channel stops operating. (Clock is supplied and some power is consumed.)
Operation start	Sets the TSmn bit to 1. → The TSmn bit automatically returns to 0 because it is a trigger bit.	TEmn = 1, and count operation starts. Value of the TDRmn register is loaded to timer count register mn (TCRmn) and detection of the TImn pin input edge is awaited.
During operation	Set value of the TDRmn register can be changed. The TCRmn register can always be read. The TSRmn register is not used. Set values of the TMRmn register, TOM0n, TOL0n, TO0n, and TOE0n bits cannot be changed.	Counter (TCRmn) counts down each time input edge of the TImn pin has been detected. When count value reaches 0000H, the value of the TDRmn register is loaded to the TCRmn register again, and the count operation is continued. By detecting TCRmn = 0000H, the INTTMmn output is generated. After that, the above operation is repeated.
Operation stop	The TTmn bit is set to 1. → The TTmn bit automatically returns to 0 because it is a trigger bit.	TEmn = 0, and count operation stops. The TCRmn register holds count value and stops.
TAU stop	The TAUmEN bit of the PER0 register is cleared to 0. →	Power-off status All circuits are initialized and SFR of each channel is also initialized.

Operation is resumed.

Remark m: Unit number (m = 0), n: Channel number (n = 0 to 7)

7.8.3 Operation as frequency divider (channel 0 of unit 0 only)

The timer array unit can be used as a frequency divider that divides a clock input to the TI00 pin and outputs the result from the TO00 pin.

The divided clock frequency output from TO00 can be calculated by the following expression.

- When rising edge/falling edge is selected:
  Divided clock frequency = Input clock frequency/{(Set value of TDR00 + 1) × 2}
- When both edges are selected:
  Divided clock frequency ≈ Input clock frequency/(Set value of TDR00 + 1)

Timer count register 00 (TCR00) operates as a down counter in the interval timer mode.

After the channel start trigger bit (TS00) of timer channel start register 0 (TS0) is set to 1, the TCR00 register loads the value of timer data register 00 (TDR00) when the TI00 valid edge is detected.

If the MD000 bit of timer mode register 00 (TMR00) is 0 at this time, INTTM00 is not output and TO00 is not toggled. If the MD000 bit of timer mode register 00 (TMR00) is 1, INTTM00 is output and TO00 is toggled.

After that, the TCR00 register counts down at the valid edge of the TI00 pin. When TCR00 = 0000H, it toggles TO00. At the same time, the TCR00 register loads the value of the TDR00 register again, and continues counting.

If detection of both the edges of the TI00 pin is selected, the duty factor error of the input clock affects the divided clock period of the TO00 output.

The period of the TO00 output clock includes a sampling error of one period of the operation clock.

Clock period of TO00 output = Ideal TO00 output clock period ± Operation clock period (error)

The TDR00 register can be rewritten at any time. The new value of the TDR00 register becomes valid during the next count period.

Figure 7-48. Block Diagram of Operation as Frequency Divider

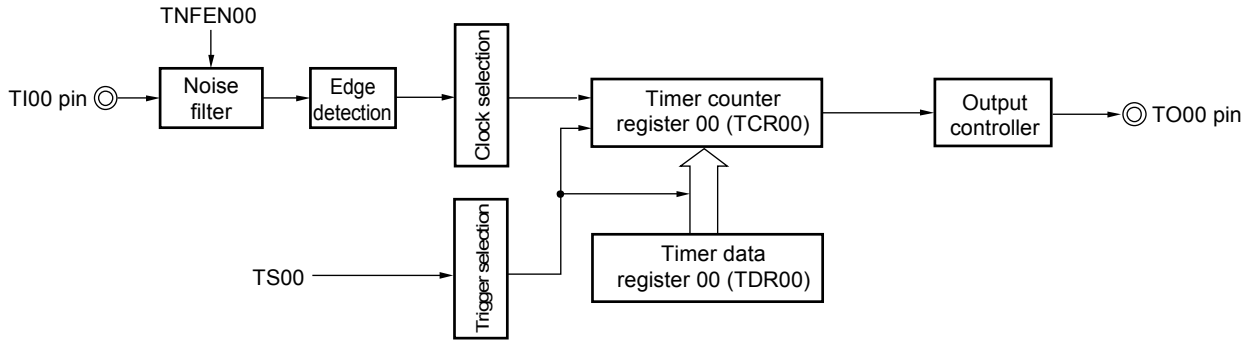

Figure 7-49. Example of Basic Timing of Operation as Frequency Divider (MD000 = 1)

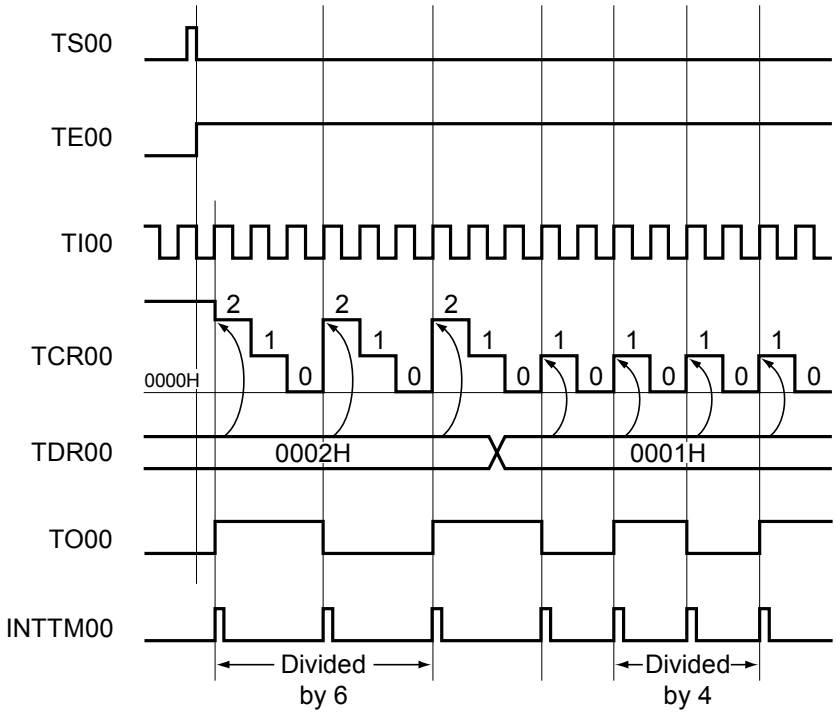

Remark TS00: Bit n of timer channel start register 0 (TS0)
TE00: Bit n of timer channel enable status register 0 (TE0)
TI00: TI00 pin input signal
TCR00: Timer count register 00 (TCR00)
TDR00: Timer data register 00 (TDR00)
TO00: TO00 pin output signal

Figure 7-50. Example of Set Contents of Registers During Operation as Frequency Divider

(a) Timer mode register 00 (TMR00)

	15	14	13	12	11	10	9	8	7	6	5	4	3	2	1	0
TMR00	CKS0n1	CKS0n0		CCS00		STS002	STS001	STS000	CIS001	CIS000			MD003	MD002	MD001	MD000
	1/0	0	0	1	0	0	0	0	1/0	1/0	0	0	0	0	0	1/0

Operation mode of channel 0
000B: Interval timer

Setting of operation when counting is started
0: Neither generates INTTM00 nor inverts timer output when counting is started.
1: Generates INTTM00 and inverts timer output when counting is started.

Selection of TI00 pin input edge
00B: Detects falling edge.
01B: Detects rising edge.
10B: Detects both edges.
11B: Setting prohibited

Start trigger selection
000B: Selects only software start.

Count clock selection
1: Selects the TI00 pin input valid edge.

Operation clock (f_{MCK}) selection
00B: Selects CK00 as operation clock of channel 0.
10B: Selects CK01 as operation clock of channel 0.

(b) Timer output register 0 (TO0)

	Bit 0	
TO0	TO00	0: Outputs 0 from TO00.
	1/0	1: Outputs 1 from TO00.

(c) Timer output enable register 0 (TOE0)

	Bit 0	
TOE0	TOE00	0: Stops the TO00 output operation by counting operation.
	1/0	1: Enables the TO00 output operation by counting operation.

(d) Timer output level register 0 (TOL0)

	Bit 0	
TOL0	TOL00	0: Cleared to 0 when master channel output mode (TOM00 = 0)
	0	

(e) Timer output mode register 0 (TOM0)

	Bit 0	
TOM0	TOM00	0: Sets master channel output mode.
	0	

Figure 7-51. Operation Procedure When Frequency Divider Function Is Used

	Software Operation	Hardware Status
TAU default setting		Power-off status (Clock supply is stopped and writing to each register is disabled.)
	Sets the TAU0EN bit of peripheral enable register 0 (PER0) to 1. →	Power-on status. Each channel stops operating. (Clock supply is started and writing to each register is enabled.)
	Sets timer clock select register 0 (TPS0). Determines clock frequencies of CK00 to CK03.	
Channel default setting	Sets the corresponding bit of the noise filter enable registers 1, 2 (NFEN1, NFEN2) to 0 (off) or 1 (on). Sets timer mode register 0n (TMR0n) (determines operation mode of channel and selects the detection edge). Sets interval (period) value to timer data register 00 (TDR00).	Channel stops operating. (Clock is supplied and some power is consumed.)
	Clears the TOM00 bit of timer output mode register 0 (TOM0) to 0 (master channel output mode). Clears the TOL00 bit to 0. Sets the TO00 bit and determines default level of the TO00 output. →	The TO00 pin goes into Hi-Z output state. The TO00 default setting level is output when the port mode register is in output mode and the port register is 0.
	Sets the TOE00 bit to 1 and enables operation of TO00. →	TO00 does not change because channel stops operating.
	Clears the port register and port mode register to 0. →	The TO00 pin outputs the TO00 set level.
Operation start	Sets the TOE00 bit to 1 (only when operation is resumed). →	TE00 = 1, and count operation starts. Value of the TDR00 register is loaded to timer count register 00 (TCR00). INTTM00 is generated and TO00 performs toggle operation if the MD000 bit of the TMR00 register is 1.
	Sets the TS00 bit to 1. The TS00 bit automatically returns to 0 because it is a trigger bit.	
During operation	Set value of the TDR00 register can be changed. The TCR00 register can always be read. The TSR00 register is not used. Set values of the TO0 and TOE0 registers can be changed. Set values of the TMR00 register, TOM00, and TOL00 bits cannot be changed.	Counter (TCR00) counts down. When count value reaches 0000H, the value of the TDR00 register is loaded to the TCR00 register again, and the count operation is continued. By detecting TCR00 = 0000H, INTTM00 is generated and TO00 performs toggle operation. After that, the above operation is repeated.
Operation stop	The TT00 bit is set to 1. →	TE00 = 0, and count operation stops. The TCR00 register holds count value and stops. The TO00 output is not initialized but holds current status.
	The TOE00 bit is cleared to 0 and value is set to the TO00 bit. →	The TO00 pin outputs the TO00 set level.
TAU stop	To hold the TO00 pin output level Clears the TO00 bit to 0 after the value to be held is set to the port register. →	The TO00 pin output level is held by port function.
	When holding the TO00 pin output level is not necessary Setting not required.	
	The TAU0EN bit of the PER0 register is cleared to 0. →	Power-off status All circuits are initialized and SFR of each channel is also initialized. (The TO00 bit is cleared to 0 and the TO00 pin is set to port mode).

Operation is resumed.

7.8.4 Operation as input pulse interval measurement

The count value can be captured at the TImn valid edge and the interval of the pulse input to TImn can be measured. In addition, the count value can be captured by using software operation (TSmn = 1) as a capture trigger while the TEmn bit is set to 1.

The pulse interval can be calculated by the following expression.

TImn input pulse interval = Period of count clock × ((10000H × TSRmn: OVF) + (Capture value of TDRmn + 1))

Caution The TImn pin input is sampled using the operating clock selected with the CKSmn bit of timer mode register mn (TMRmn), so an error of up to one operating clock cycle occurs.

Timer count register mn (TCRmn) operates as an up counter in the capture mode.

When the channel start trigger bit (TSmn) of timer channel start register m (TSm) is set to 1, the TCRmn register counts up from 0000H in synchronization with the count clock.

When the TImn pin input valid edge is detected, the count value of the TCRmn register is transferred (captured) to timer data register mn (TDRmn) and, at the same time, the TCRmn register is cleared to 0000H, and the INTTMmn is output. If the counter overflows at this time, the OVF bit of timer status register mn (TSRmn) is set to 1. If the counter does not overflow, the OVF bit is cleared. After that, the above operation is repeated.

As soon as the count value has been captured to the TDRmn register, the OVF bit of the TSRmn register is updated depending on whether the counter overflows during the measurement period. Therefore, the overflow status of the captured value can be checked.

If the counter reaches a full count for two or more periods, it is judged to be an overflow occurrence, and the OVF bit of the TSRmn register is set to 1. However, a normal interval value cannot be measured for the OVF bit, if two or more overflows occur.

Set the STSmn2 to STSmn0 bits of the TMRmn register to 001B to use the valid edges of TImn as a start trigger and a capture trigger.

Figure 7-52. Block Diagram of Operation as Input Pulse Interval Measurement

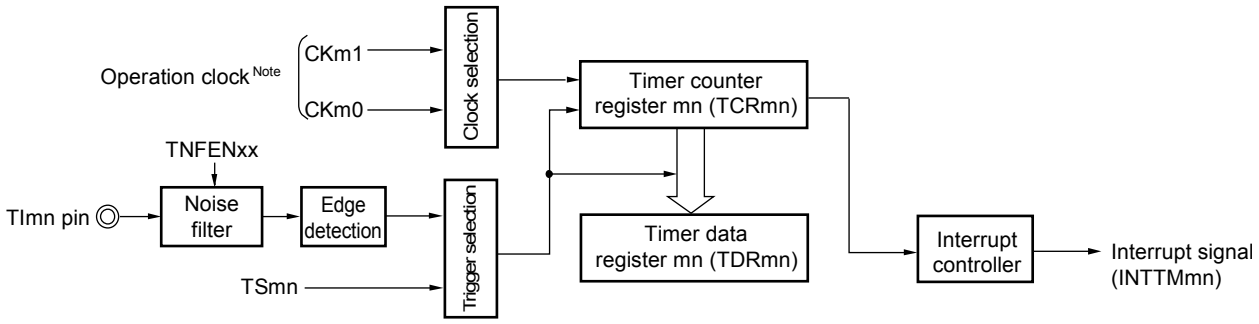

Note When channels 1 and 3, the clock can be selected from CKm0, CKm1, CKm2 and CKm3.

Remark m: Unit number (m = 0), n: Channel number (n = 0 to 7)

Figure 7-53. Example of Basic Timing of Operation as Input Pulse Interval Measurement (MDmn0 = 0)

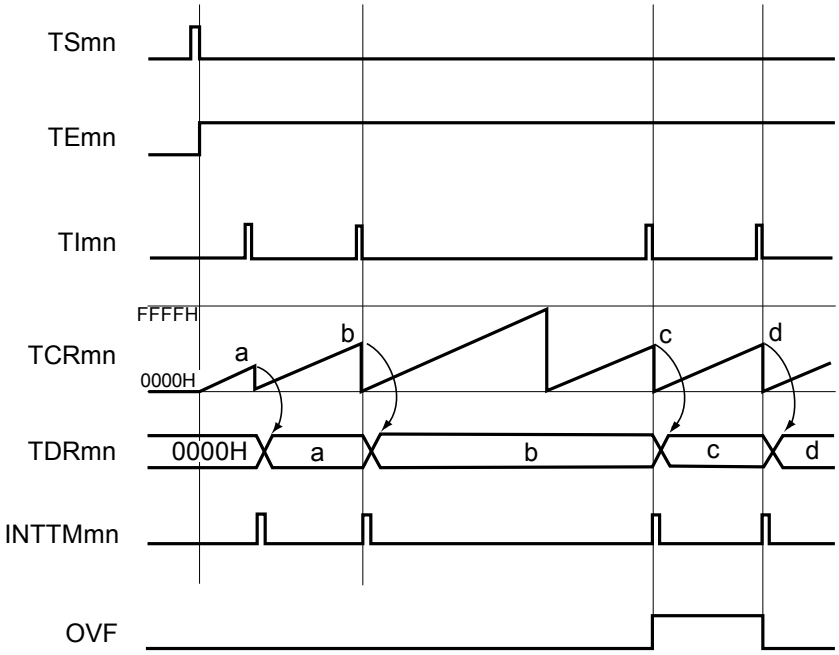

Remarks 1. m: Unit number (m = 0)n: Channel number (n = 0 to 7)

2. TSmn: Bit n of timer channel start register m (TSm)
TEmn: Bit n of timer channel enable status register m (TEm)
TImn: TImn pin input signal
TCRmn: Timer count register mn (TCRmn)
TDRmn: Timer data register mn (TDRmn)
OVF: Bit 0 of timer status register mn (TSRmn)

Figure 7-54. Example of Set Contents of Registers to Measure Input Pulse Interval

(a) Timer mode register mn (TMRmn)

	15	14	13	12	11	10	9	8	7	6	5	4	3	2	1	0
TMRmn	CKSmn1	CKSmn0		CCSmn	M/S Note	STSmn2	STSmn1	STSmn0	CISmn1	CISmn0			MDmn3	MDmn2	MDmn1	MDmn0
	1/0	0	0	0	0	0	0	1	1/0	1/0	0	0	0	1	0	1/0

Operation mode of channel n
010B: Capture mode

Setting of operation when counting is started
0: Does not generate INTTMmn when counting is started.
1: Generates INTTMmn when counting is started.

Selection of TImn pin input edge
00B: Detects falling edge.
01B: Detects rising edge.
10B: Detects both edges.
11B: Setting prohibited

Capture trigger selection
001B: Selects the TImn pin input valid edge.

Setting of MASTERmn bit (channels 2, 4, 6)
0: Independent channel operation
Setting of SPLITmn bit (channels 1, 3)
0: 16-bit timer mode.

Count clock selection
0: Selects operation clock (f_{MCK}).

Operation clock (f_{MCK}) selection
00B: Selects CKm0 as operation clock of channel n.
10B: Selects CKm1 as operation clock of channel n.
01B: Selects CKm2 as operation clock of channels 1, 3 (This can only be selected channels 1 and 3).
11B: Selects CKm3 as operation clock of channels 1, 3 (This can only be selected channels 1 and 3).

(b) Timer output register 0 (TO0)

	Bit n
TO0	TO0n 0

0: Outputs 0 from TO0n.

(c) Timer output enable register 0 (TOE0)

	Bit n
TOE0	TOE0n 0

0: Stops TO0n output operation by counting operation.

(d) Timer output level register 0 (TOL0)

	Bit n
TOL0	TOL0n 0

0: Cleared to 0 when TOM0n = 0 (master channel output mode).

(e) Timer output mode register 0 (TOM0)

	Bit n
TOM0	TOM0n 0

0: Sets master channel output mode.

Note TMRm2, TMRm4, TMRm6: MASTERmn bit
TMRm1, TMRm3: SPLITmn bit
TMRm0, TMRm5, TMRm7: Fixed to 0

Remark m: Unit number (m = 0), n: Channel number (n = 0 to 7)

Figure 7-55. Operation Procedure When Input Pulse Interval Measurement Function Is Used

	Software Operation	Hardware Status
TAU default setting		Power-off status (Clock supply is stopped and writing to each register is disabled.)
	Sets the TAUmEN bit of peripheral enable register 0 (PER0) to 1. →	Power-on status. Each channel stops operating. (Clock supply is started and writing to each register is enabled.)
	Sets timer clock select register m (TPSm). Determines clock frequencies of CKm0 to CKm3.	
Channel default setting	Sets the corresponding bit of the noise filter enable register 1 (NFEN1) to 0 (off) or 1 (on). Sets timer mode register mn (TMRmn) (determines operation mode of channel).	Channel stops operating. (Clock is supplied and some power is consumed.)
Operation start	Sets TSmn bit to 1. → The TSmn bit automatically returns to 0 because it is a trigger bit.	TEmn = 1, and count operation starts. Timer count register mn (TCRmn) is cleared to 0000H. When the MDmn0 bit of the TMRmn register is 1, INTTMmn is generated.
During operation	Set values of only the CISmn1 and CISmn0 bits of the TMRmn register can be changed. The TDRmn register can always be read. The TCRmn register can always be read. The TSRmn register can always be read. Set values of the TOM0n, TOL0n, TO0n, and TOE0n bits cannot be changed.	Counter (TCRmn) counts up from 0000H. When the valid edge of the TImn pin input is detected or the TSmn bit is set to 1, the count value is transferred (captured) to timer data register mn (TDRmn). At the same time, the TCRmn register is cleared to 0000H, and the INTTMmn signal is generated. If an overflow occurs at this time, the OVF bit of timer status register mn (TSRmn) is set; if an overflow does not occur, the OVF bit is cleared. After that, the above operation is repeated.
Operation stop	The TTmn bit is set to 1. → The TTmn bit automatically returns to 0 because it is a trigger bit.	TEmn = 0, and count operation stops. The TCRmn register holds count value and stops. The OVF bit of the TSRmn register is also held.
TAU stop	The TAUmEN bit of the PER0 register is cleared to 0. →	Power-off status All circuits are initialized and SFR of each channel is also initialized.

Operation is resumed.

Remark m: Unit number (m = 0), n: Channel number (n = 0 to 7)

7.8.5 Operation as input signal high-/low-level width measurement

By starting counting at one edge of the TImn pin input and capturing the number of counts at another edge, the signal width (high-level width/low-level width) of TImn can be measured. The signal width of TImn can be calculated by the following expression.

Signal width of TImn input = Period of count clock × ((10000H × TSRmn: OVF) + (Capture value of TDRmn + 1))

Caution The TImn pin input is sampled using the operating clock selected with the CKSmn bit of timer mode register mn (TMRmn), so an error equivalent to one operation clock occurs.

Timer count register mn (TCRmn) operates as an up counter in the capture & one-count mode.

When the channel start trigger bit (TSmn) of timer channel start register m (TSm) is set to 1, the TEmn bit is set to 1 and the TImn pin start edge detection wait status is set.

When the TImn pin input start edge (rising edge of the TImn pin input when the high-level width is to be measured) is detected, the counter counts up from 0000H in synchronization with the count clock. When the valid capture edge (falling edge of the TImn pin input when the high-level width is to be measured) is detected later, the count value is transferred to timer data register mn (TDRmn) and, at the same time, INTTMmn is output. If the counter overflows at this time, the OVF bit of timer status register mn (TSRmn) is set to 1. If the counter does not overflow, the OVF bit is cleared. The TCRmn register stops at the value “value transferred to the TDRmn register + 1”, and the TImn pin start edge detection wait status is set. After that, the above operation is repeated.

As soon as the count value has been captured to the TDRmn register, the OVF bit of the TSRmn register is updated depending on whether the counter overflows during the measurement period. Therefore, the overflow status of the captured value can be checked.

If the counter reaches a full count for two or more periods, it is judged to be an overflow occurrence, and the OVF bit of the TSRmn register is set to 1. However, a normal interval value cannot be measured for the OVF bit, if two or more overflows occur.

Whether the high-level width or low-level width of the TImn pin is to be measured can be selected by using the CISmn1 and CISmn0 bits of the TMRmn register.

Because this function is used to measure the signal width of the TImn pin input, the TSmn bit cannot be set to 1 while the TEmn bit is 1.

CISmn1, CISmn0 of TMRmn register = 10B: Low-level width is measured.

CISmn1, CISmn0 of TMRmn register = 11B: High-level width is measured.

Figure 7-56. Block Diagram of Operation as Input Signal High-/Low-Level Width Measurement

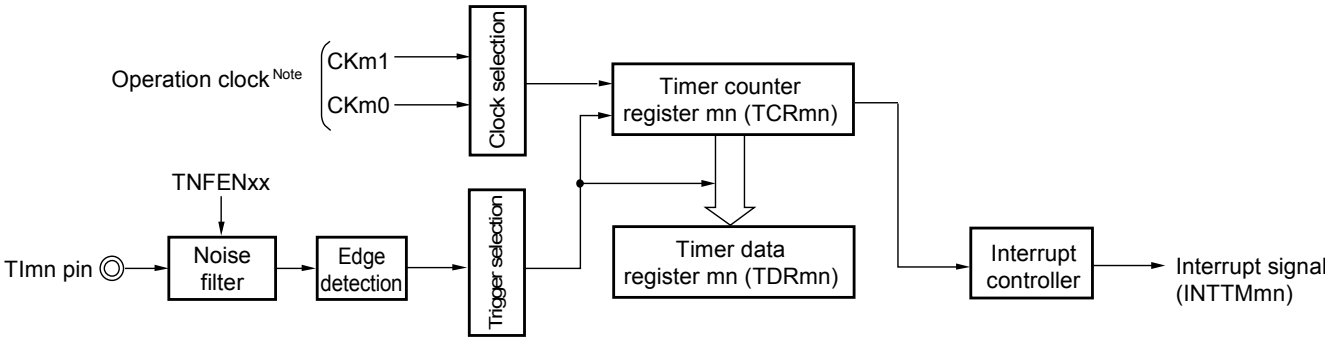

Note For channels 1 and 3, the clock can be selected from CKm0, CKm1, CKm2 and CKm3.

Figure 7-57. Example of Basic Timing of Operation as Input Signal High-/Low-Level Width Measurement

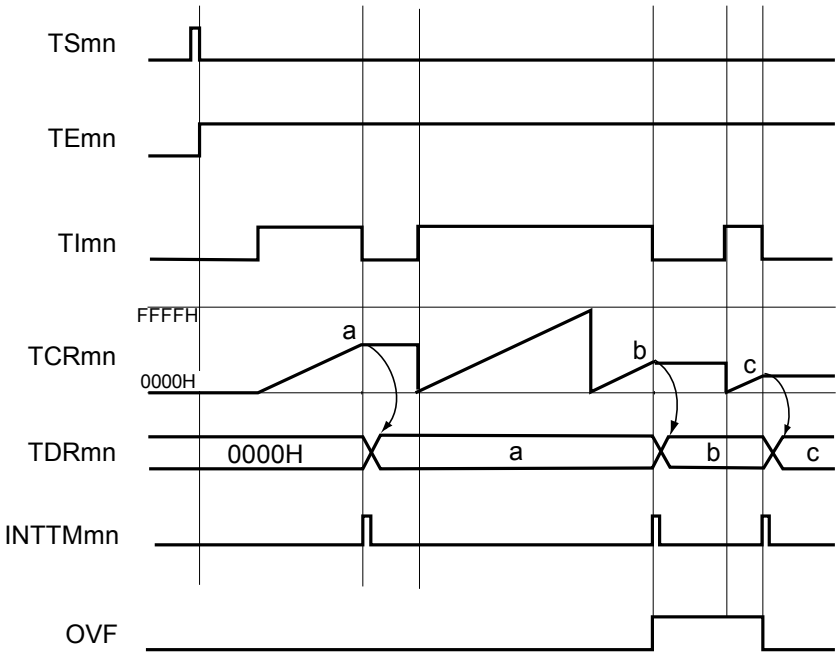

Remarks 1. m: Unit number (m = 0), n: Channel number (n = 0 to 7)

2. TSmn: Bit n of timer channel start register m (TSm)
TEmn: Bit n of timer channel enable status register m (TEm)
TImn: TImn pin input signal
TCRmn: Timer count register mn (TCRmn)
TDRmn: Timer data register mn (TDRmn)
OVF: Bit 0 of timer status register mn (TSRmn)

Figure 7-58. Example of Set Contents of Registers to Measure Input Signal High-/Low-Level Width

(a) Timer mode register mn (TMRmn)

	15	14	13	12	11	10	9	8	7	6	5	4	3	2	1	0
TMRmn	CKSmn1	CKSmn0		CCSmn	M/S[Note]	STSmn2	STSmn1	STSmn0	CISmn1	CISmn0			MDmn3	MDmn2	MDmn1	MDmn0
	1/0	0	0	0	0	0	1	0	1	1/0	0	0	1	1	0	0

Operation mode of channel n
110B: Capture & one-count

Setting of operation when counting is started
0: Does not generate INTTMmn when counting is started.

Selection of TImn pin input edge
10B: Both edges (to measure low-level width)
11B: Both edges (to measure high-level width)

Start trigger selection
010B: Selects the TImn pin input valid edge.

Setting of MASTERmn bit (channels 2, 4, 6)
0: Independent channel operation function.
Setting of SPLITmn bit (channels 1, 3)
1: 16-bit timer mode.

Count clock selection
0: Selects operation clock (f_{MCK}).

Operation clock (f_{MCK}) selection
00B: Selects CKm0 as operation clock of channel n.
10B: Selects CKm1 as operation clock of channel n.
01B: Selects CKm2 as operation clock of channels 1, 3 (This can only be selected channels 1 and 3).
11B: Selects CKm3 as operation clock of channels 1, 3 (This can only be selected channels 1 and 3).

(b) Timer output register 0 (TO0)

	Bit n
TO0	TO0n 0

0: Outputs 0 from TO0n.

(c) Timer output enable register 0 (TOE0)

	Bit n
TOE0	TOE0n 0

0: Stops the TO0n output operation by counting operation.

(d) Timer output level register 0 (TOL0)

	Bit n
TOL0	TOL0n 0

0: Cleared to 0 when TOM0n = 0 (master channel output mode).

(e) Timer output mode register 0 (TOM0)

	Bit n
TOM0	TOM0n 0

0: Sets master channel output mode.

Note TMRm2, TMRm4, TMRm6: MASTERmn bit
TMRm1, TMRm3: SPLITmn bit
TMRm0, TMRm5, TMRm7: Fixed to 0

Remark m: Unit number (m = 0), n: Channel number (n = 0 to 7)

Figure 7-59. Operation Procedure When Input Signal High-/Low-Level Width Measurement Function Is Used

	Software Operation	Hardware Status
TAU default setting		Power-off status (Clock supply is stopped and writing to each register is disabled.)
	Sets the TAUmEN bit of peripheral enable register 0 (PER0) to 1.	Power-on status. Each channel stops operating. (Clock supply is started and writing to each register is enabled.)
	Sets timer clock select register m (TPSm). Determines clock frequencies of CKm0 to CKm3.	
Channel default setting	Sets the corresponding bit of the noise filter enable register 1 (NFEN1) to 0 (off) or 1 (on). Sets timer mode register mn (TMRmn) (determines operation mode of channel). Clears the TOE0n bit to 0 and stops operation of TO0n.	Channel stops operating. (Clock is supplied and some power is consumed.)
Operation start	Sets the TSmn bit to 1. The TSmn bit automatically returns to 0 because it is a trigger bit.	TEmn = 1, and the TImn pin start edge detection wait status is set.
	Detects the TImn pin input count start valid edge.	Clears timer count register mn (TCRmn) to 0000H and starts counting up.
During operation	Set value of the TDRmn register can be changed. The TCRmn register can always be read. The TSRmn register is not used. Set values of the TMRmn register, TOM0n, TOL0n, TO0n, and TOE0n bits cannot be changed.	When the TImn pin start edge is detected, the counter (TCRmn) counts up from 0000H. If a capture edge of the TImn pin is detected, the count value is transferred to timer data register mn (TDRmn) and INTTMmn is generated. If an overflow occurs at this time, the OVF bit of timer status register mn (TSRmn) is set; if an overflow does not occur, the OVF bit is cleared. The TCRmn register stops the count operation until the next TImn pin start edge is detected.
Operation stop	The TTmn bit is set to 1. The TTmn bit automatically returns to 0 because it is a trigger bit.	TEmn = 0, and count operation stops. The TCRmn register holds count value and stops. The OVF bit of the TSRmn register is also held.
TAU stop	The TAUmEN bit of the PER0 register is cleared to 0.	Power-off status All circuits are initialized and SFR of each channel is also initialized.

Operation is resumed.

Remark m: Unit number (m = 0), n: Channel number (n = 0 to 7)

7.8.6 Operation as delay counter

It is possible to start counting down when the valid edge of the TImn pin input is detected (an external event), and then generate INTTMmn (a timer interrupt) after any specified interval.

It is also possible to start counting down and generate INTTMmn (timer interrupt) at any interval by setting TSmn to 1 by software while TEmn = 1.

The interrupt generation period can be calculated by the following expression.

Generation period of INTTMmn (timer interrupt) = Period of count clock × (Set value of TDRmn + 1)

Timer count register mn (TCRmn) operates as a down counter in the one-count mode.

When the channel start trigger bit (TSmn, TSHm1, TSHm3) of timer channel start register m (TSm) is set to 1, the TEmn, TEHm1, TEHm3 bits are set to 1 and the TImn pin input valid edge detection wait status is set.

Timer count register mn (TCRmn) starts operating upon TImn pin input valid edge detection and loads the value of timer data register mn (TDRmn). The TCRmn register counts down from the value of the TDRmn register it has loaded, in synchronization with the count clock. When TCRmn = 0000H, it outputs INTTMmn and stops counting until the next TImn pin input valid edge is detected.

The TDRmn register can be rewritten at any time. The new value of the TDRmn register becomes valid from the next period.

Figure 7-60. Block Diagram of Operation as Delay Counter

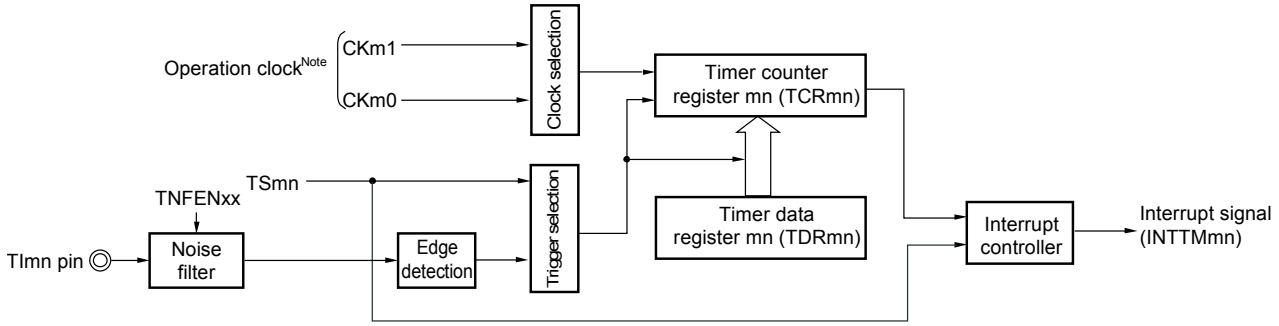

Note For using channels 1 and 3, the clock can be selected from CKm0, CKm1, CKm2 and CKm3.

Remark m: Unit number (m = 0), n: Channel number (n = 0 to 7)

Figure 7-61. Example of Basic Timing of Operation as Delay Counter

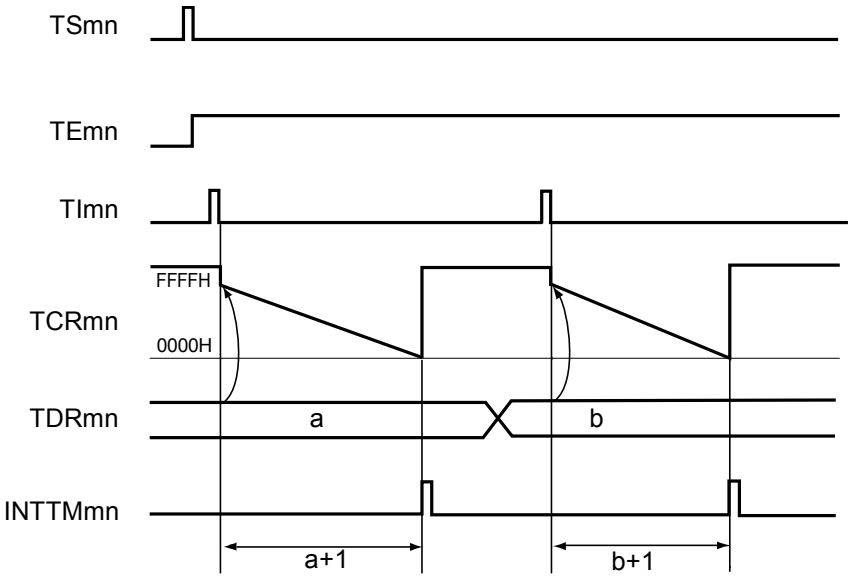

Remarks 1. m: Unit number (m = 0), n: Channel number (n = 0 to 7)

2. TSmn: Bit n of timer channel start register m (TSm)

TEmn: Bit n of timer channel enable status register m (TEm)

TImn: TImn pin input signal

TCRmn: Timer count register mn (TCRmn)

TDRmn: Timer data register mn (TDRmn)

Figure 7-62. Example of Set Contents of Registers to Delay Counter (1/2)

(a) Timer mode register mn (TMRmn)

	15	14	13	12	11	10	9	8	7	6	5	4	3	2	1	0
TMRmn	CKSmn1	CKSmn0		CCSmn	M/S Note	STSmn2	STSmn1	STSmn0	CISmn1	CISmn0			MDmn3	MDmn2	MDmn1	MDmn0
	1/0	1/0	0	0	0/1	0	0	1	1/0	1/0	0	0	1	0	0	1/0

Operation mode of channel n
100B: One-count mode

Start trigger during operation
0: Trigger input is invalid.
1: Trigger input is valid.

Selection of TImn pin input edge
00B: Detects falling edge.
01B: Detects rising edge.
10B: Detects both edges.
11B: Setting prohibited

Start trigger selection
001B: Selects the TImn pin input valid edge.

Setting of MASTERmn bit (channels 2, 4, 6)
0: Independent channel operation function.

Setting of SPLITmn bit (channels 1, 3)
0: 16-bit timer mode
1: 8-bit timer mode.

Count clock selection
0: Selects operation clock (f_{MCK}).

Operation clock (f_{MCK}) selection
00B: Selects CKm0 as operation clock of channel n.
10B: Selects CKm1 as operation clock of channel n.
01B: Selects CKm2 as operation clock of channels 1, 3 (This can only be selected channels 1 and 3).
11B: Selects CKm3 as operation clock of channels 1, 3 (This can only be selected channels 1 and 3).

(b) Timer output register 0 (TO0)

	Bit n
TO0	TO0n
	0

0: Outputs 0 from TO0n.

(c) Timer output enable register 0 (TOE0)

	Bit n
TOE0	TOE0n
	0

0: Stops the TO0n output operation by counting operation.

Note TMRm2, TMRm4, TMRm6: MASTERmn bit
TMRm1, TMRm3: SPLITmn bit
TMRm0, TMRm5, TMRm7: Fixed to 0

Remark m: Unit number (m = 0), n: Channel number (n = 0 to 7)

Figure 7-62. Example of Set Contents of Registers to Delay Counter (2/2)

(d) Timer output level register 0 (TOL0)

	Bit n	
TOL0	TOL0n 0	0: Cleared to 0 when TOM0n = 0 (master channel output mode).

(e) Timer output mode register 0 (TOM0)

	Bit n	
TOM0	TOM0n 0	0: Sets master channel output mode.

Remark m: Unit number (m = 0), n: Channel number (n = 0 to 7)

Figure 7-63. Operation Procedure When Delay Counter Function Is Used

	Software Operation	Hardware Status
TAU default setting		Power-off status (Clock supply is stopped and writing to each register is disabled.)
	Sets the TAUmEN bit of peripheral enable register 0 (PER0) to 1. →	Power-on status. Each channel stops operating. (Clock supply is started and writing to each register is enabled.)
	Sets timer clock select register m (TPSm). Determines clock frequencies of CKm0 to CKm3.	
Channel default setting	Sets the corresponding bit of the noise filter enable register 1 (NFEN1) to 0 (off) or 1 (on). Sets timer mode register mn (TMRmn) (determines operation mode of channel). INTTMmn output delay is set to timer data register mn (TDRmn). Clears the TOE0n bit to 0 and stops operation of TO0n.	Channel stops operating. (Clock is supplied and some power is consumed.)
Operation start	Sets the TSmn bit to 1. → The TSmn bit automatically returns to 0 because it is a trigger bit.	TEmn = 1, and the start trigger detection (the valid edge of the TImn pin input is detected or the TSmn bit is set to 1) wait status is set.
	The counter starts counting down by the next start trigger detection. → ● Detects the TImn pin input valid edge. ● Sets the TSmn bit to 1 by the software.	Value of the TDRmn register is loaded to the timer count register mn (TCRmn).
During operation	Set value of the TDRmn register can be changed. The TCRmn register can always be read. The TSRmn register is not used.	The counter (TCRmn) counts down. When the count value of TCRmn reaches 0000H, the INTTMmn output is generated, and the count operation stops until the next start trigger detection (the valid edge of the TImn pin input is detected or the TSmn bit is set to 1).
Operation stop	The TTmn bit is set to 1. → The TTmn bit automatically returns to 0 because it is a trigger bit.	TEmn = 0, and count operation stops. The TCRmn register holds count value and stops.
TAU stop	The TAUmEN bit of the PER0 register is cleared to 0. →	Power-off status All circuits are initialized and SFR of each channel is also initialized.

Operation is resumed.

Remark m: Unit number (m = 0), n: Channel number (n = 0 to 7)

7.9 Simultaneous Channel Operation Function of Timer Array Unit

7.9.1 Operation as one-shot pulse output function

By using two channels as a set, a one-shot pulse having any delay pulse width can be generated from the signal input to the TImn pin.

The delay time and pulse width can be calculated by the following expressions.

Delay time = {Set value of TDRmn (master) + 2} × Count clock period
Pulse width = {Set value of TDRmp (slave)} × Count clock period

The master channel operates in the one-count mode and counts the delays. Timer count register mn (TCRmn) of the master channel starts operating upon start trigger detection and loads the value of timer data register mn (TDRmn).

The TCRmn register counts down from the value of the TDRmn register it has loaded, in synchronization with the count clock. When TCRmn = 0000H, it outputs INTTMmn and stops counting until the next start trigger is detected.

The slave channel operates in the one-count mode and counts the pulse width. The TCRmp register of the slave channel starts operation using INTTMmn of the master channel as a start trigger, and loads the value of the TDRmp register. The TCRmp register counts down from the value of The TDRmp register it has loaded, in synchronization with the count value. When count value = 0000H, it outputs INTTMmp and stops counting until the next start trigger (INTTMmn of the master channel) is detected. The output level of TO0p becomes active one count clock after generation of INTTMmn from the master channel, and inactive when TCRmp = 0000H.

Instead of using the TImn pin input, a one-shot pulse can also be output using the software operation (TSmn = 1) as a start trigger.

Caution The timing of loading of timer data register mn (TDRmn) of the master channel is different from that of the TDRmp register of the slave channel. If the TDRmn and TDRmp registers are rewritten during operation, therefore, an illegal waveform is output. Rewrite the TDRmn register after INTTMmn is generated and the TDRmp register after INTTMmp is generated.

Remark m: Unit number (m = 0), n: Master channel number (n = 0, 2, 4, 6)
p: Slave channel number (n < p ≤ 7)

Figure 7-64. Block Diagram of Operation as One-Shot Pulse Output Function

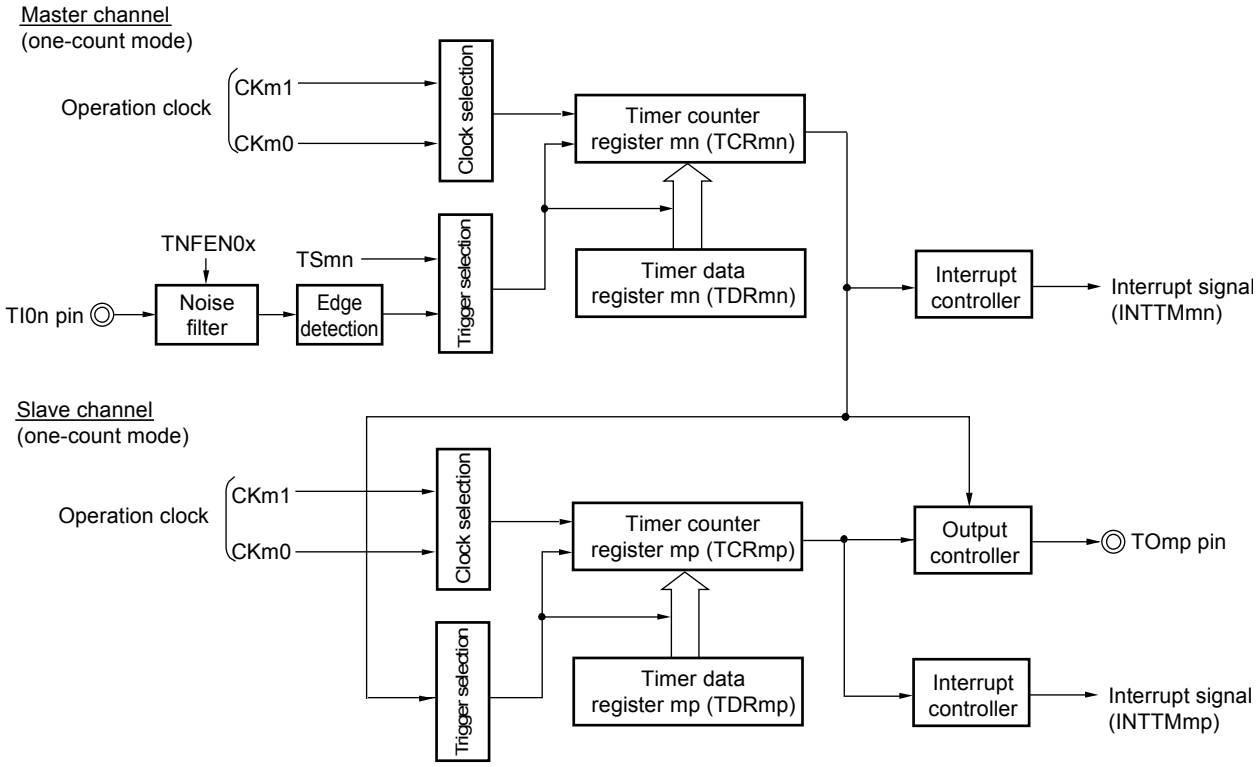

Remark m: Unit number (m = 0), n: Master channel number (n = 0, 2, 4, 6)
p: Slave channel number (n < p ≤ 7)

Figure 7-65. Example of Basic Timing of Operation as One-Shot Pulse Output Function

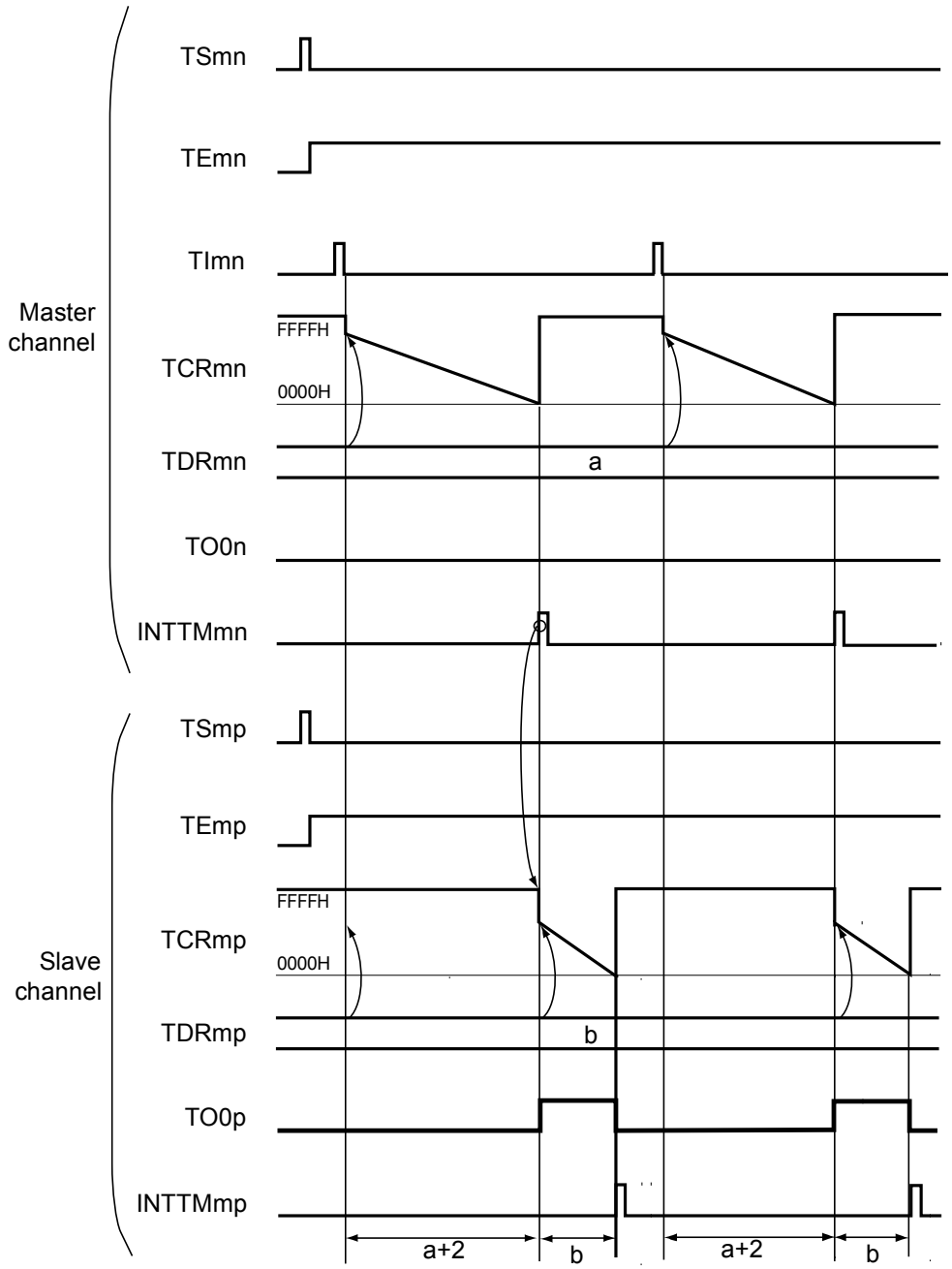

Remarks 1. m: Unit number (m = 0), n: Master channel number (n = 0, 2, 4, 6)
p: Slave channel number (n < p ≤ 7)

2. TSmn, TSmp: Bit n, p of timer channel start register m (TSm)
TEmn, TEmp: Bit n, p of timer channel enable status register m (TEm)
TImn, TImp: TImn and TImp pins input signal
TCRmn, TCRmp: Timer count registers mn, mp (TCRmn, TCRmp)
TDRmn, TDRmp: Timer data registers mn, mp (TDRmn, TDRmp)
TO0n, TO0p:TO0n and TO0p pins output signal

Figure 7-66. Example of Set Contents of Registers When One-Shot Pulse Output Function Is Used (Master Channel)

(a) Timer mode register mn (TMRmn)

	15	14	13	12	11	10	9	8	7	6	5	4	3	2	1	0
TMRmn	CKSmn1	CKSmn0		CCSmn	MAS TERmn Note	STSmn2	STSmn1	STSmn0	CISmn1	CISmn0			MDmn3	MDmn2	MDmn1	MDmn0
	1/0	0	0	0	1	0	0	1	1/0	1/0	0	0	1	0	0	0

Operation mode of channel n
100B: One-count mode

Start trigger during operation
0: Trigger input is invalid.

Selection of TImn pin input edge
00B: Detects falling edge.
01B: Detects rising edge.
10B: Detects both edges.
11B: Setting prohibited

Start trigger selection
001B: Selects the TImn pin input valid edge.

Setting of MASTERmn bit (channels 2, 4, 6)
1: Master channel.

Count clock selection
0: Selects operation clock (f_{MCK}).

Operation clock (f_{MCK}) selection
00B: Selects CKm0 as operation clock of channels n.
10B: Selects CKm1 as operation clock of channels n.

(b) Timer output register 0 (TO0)

	Bit n
TO0	TO0n 0

0: Outputs 0 from TO0n.

(c) Timer output enable register 0 (TOE0)

	Bit n
TOE0	TOE0n 0

0: Stops the TO0n output operation by counting operation.

(d) Timer output level register 0 (TOL0)

	Bit n
TOL0	TOL0n 0

0: Cleared to 0 when TOM0n = 0 (master channel output mode).

(e) Timer output mode register 0 (TOM0)

	Bit n
TOM0	TOM0n 0

0: Sets master channel output mode.

Note TMRm2, TMRm4, TMRm6: MASTERmn = 1
TMRm0: Fixed to 0

Remark m: Unit number (m = 0), n: Master channel number (n = 0, 2, 4, 6)

Figure 7-67. Example of Set Contents of Registers When One-Shot Pulse Output Function Is Used (Slave Channel)

(a) Timer mode register mp (TMRmp)

	15	14	13	12	11	10	9	8	7	6	5	4	3	2	1	0
TMRmp	CKSmp1	CKSmp0		CCSmp	M/S Note	STSmp2	STSmp1	STSmp0	CISmp1	CISmp0			MDmp3	MDmp2	MDmp1	MDmp0
	1/0	0	0	0	0	1	0	0	0	0	0	0	1	0	0	0

Operation mode of channel p
100B: One-count mode

Start trigger during operation
0: Trigger input is invalid.

Selection of TImp pin input edge
00B: Sets 00B because these are not used.

Start trigger selection
100B: Selects INTTMmn of master channel.

Setting of MASTERmn bit (channels 2, 4, 6)
0: Independent channel operation function.

Setting of SPLITmn bit (channels 1, 3)
1: 16-bit timer mode.

Count clock selection
0: Selects operation clock (f_{MCK}).

Operation clock (f_{MCK}) selection
00B: Selects CKm0 as operation clock of channel p.
10B: Selects CKm1 as operation clock of channel p.
* Make the same setting as master channel.

(b) Timer output register 0 (TO0)

	Bit p
TO0	TO0p
	1/0

0: Outputs 0 from TO0p.
1: Outputs 1 from TO0p.

(c) Timer output enable register 0 (TOE0)

	Bit p
TOE0	TOE0p
	1/0

0: Stops the TO0p output operation by counting operation.
1: Enables the TO0p output operation by counting operation.

(d) Timer output level register 0 (TOL0)

	Bit p
TOL0	TOL0p
	1/0

0: Positive logic output (active-high)
1: Negative logic output (active-low)

(e) Timer output mode register 0 (TOM0)

	Bit p
TOM0	TOM0p
	1

1: Sets the slave channel output mode.

Note TMRm2, TMRm4, TMRm6: MASTERmn bit
TMRm1, TMRm3: SPLITmp bit
TMRm5, TMRm7: Fixed to 0

Remark m: Unit number (m = 0), n: Master channel number (n = 0, 2, 4, 6)
p: Slave channel number (n < p ≤ 7)

Figure 7-68. Operation Procedure of One-Shot Pulse Output Function (1/2)

	Software Operation	Hardware Status
TAU default setting		Power-off status (Clock supply is stopped and writing to each register is disabled.)
	Sets the TAUmEN bit of peripheral enable registers 0 (PER0) to 1. →	Power-on status. Each channel stops operating. (Clock supply is started and writing to each register is enabled.)
	Sets timer clock select register m (TPSm). Determines clock frequencies of CKm0 and CKm1.	
Channel default setting	Sets the corresponding bit of noisefilter enable register 1 (NFEN1) to 1. Sets timer mode register mn, mp (TMRmn, TMRmp) of two channels to be used (determines operation mode of channels). An output delay is set to timer data register mn (TDRmn) of the master channel, and a pulse width is set to the TDRmp register of the slave channel.	Channel stops operating. (Clock is supplied and some power is consumed.)
	Sets slave channel. The TOM0p bit of timer output mode register 0 (TOM0) is set to 1 (slave channel output mode). Sets the TOL0p bit. Sets the TO0p bit and determines default level of the TO0p output. →	The TO0p pin goes into Hi-Z output state. The TO0p default setting level is output when the port mode register is in output mode and the port register is 0.
	Sets the TOE0p bit to 1 and enables operation of TO0p. →	TO0p does not change because channel stops operating.
	Clears the port register and port mode register to 0. →	The TO0p pin outputs the TO0p set level.

(**Remark** is listed on the next page.)

Figure 7-68. Operation Procedure of One-Shot Pulse Output Function (2/2)

Operation is resumed.

	Software Operation	Hardware Status
Operation start	Sets the TOE0p bit (slave) to 1 (only when operation is resumed). The TSmn (master) and TSmp (slave) bits of timer channel start register m (TSm) are set to 1 at the same time. The TSmn and TSmp bits automatically return to 0 because they are trigger bits.	The TEmn and TEmp bits are set to 1 and the master channel enters the start trigger detection (the valid edge of the TImn pin input is detected or the TSmn bit of the master channel is set to 1) wait status. Counter stops operating.
	Count operation of the master channel is started by start trigger detection of the master channel. ● Detects the TImn pin input valid edge. ● Sets the TSmn bit of the master channel to 1 by software [Note]. **Note** Do not set the TSmn bit of the slave channel to 1.	Master channel starts counting.
During operation	Set values of only the CISmn1 and CISmn0 bits of the TMRmn register can be changed. Set values of the TMRmp, TDRmn, TDRmp registers, TOM0n, TOM0p, TOL0n, and TOL0p bits cannot be changed. The TCRmn and TCRmp registers can always be read. The TSRmn and TSRmp registers are not used. Set values of the TO0 and TOE0 registers by slave channel can be changed.	Master channel loads the value of the TDRmn register to timer count register mn (TCRmn) by the start trigger detection (the valid edge of the TImn pin input is detected or the TSmn bit of the master channel is set to 1), and the counter starts counting down. When the count value reaches TCRmn = 0000H, the INTTMmn output is generated, and the counter stops until the next start trigger detection. The slave channel, triggered by INTTMmn of the master channel, loads the value of the TDRmp register to the TCRmp register, and the counter starts counting down. The output level of TO0p becomes active one count clock after generation of INTTMmn from the master channel. It becomes inactive when TCRmp = 0000H, and the counting operation is stopped. After that, the above operation is repeated.
Operation stop	The TTmn (master) and TTmp (slave) bits are set to 1 at the same time. The TTmn and TTmp bits automatically return to 0 because they are trigger bits.	TEmn, TEmp = 0, and count operation stops. The TCRmn and TCRmp registers hold count value and stop. The TO0p output is not initialized but holds current status.
	The TOE0p bit of slave channel is cleared to 0 and value is set to the TO0p bit.	The TO0p pin outputs the TO0p set level.
TAU stop	To hold the TO0p pin output level Clears the TO0p bit to 0 after the value to be held is set to the port register. When holding the TO0p pin output level is not necessary Setting not required.	The TO0p pin output level is held by port function.
	The TAUmEN bit of the PER0 register is cleared to 0.	Power-off status All circuits are initialized and SFR of each channel is also initialized. (The TO0p bit is cleared to 0 and the TO0p pin is set to port mode.)

Remark m: Unit number (m = 0), n: Master channel number (n = 0, 2, 4, 6)
p: Slave channel number (n < p ≤ 7)

7.9.2 Operation as PWM function

Two channels can be used as a set to generate a pulse of any period and duty factor.

The period and duty factor of the output pulse can be calculated by the following expressions.

Pulse period = {Set value of TDRmn (master) + 1} × Count clock period
Duty factor [%] = {Set value of TDRmp (slave)}/{Set value of TDRmn (master) + 1} × 100
0% output: Set value of TDRmp (slave) = 0000H
100% output: Set value of TDRmp (slave) ≥ {Set value of TDRmn (master) + 1}

Remark The duty factor exceeds 100% if the set value of TDRmp (slave) > (set value of TDRmn (master) + 1), it summarizes to 100% output.

The master channel operates in the interval timer mode. If the channel start trigger bit (TSmn) of timer channel start register m (TSm) is set to 1, an interrupt (INTTMmn) is output, the value set to timer data register mn (TDRmn) is loaded to timer count register mn (TCRmn), and the counter counts down in synchronization with the count clock. When the counter reaches 0000H, INTTMmn is output, the value of the TDRmn register is loaded again to the TCRmn register, and the counter counts down. This operation is repeated until the channel stop trigger bit (TTmn) of timer channel stop register m (TTm) is set to 1.

If two channels are used to output a PWM waveform, the period until the master channel counts down to 0000H is the PWM output (TO0p) cycle.

The slave channel operates in one-count mode. By using INTTMmn from the master channel as a start trigger, the TCRmp register loads the value of the TDRmp register and the counter counts down to 0000H. When the counter reaches 0000H, it outputs INTTMmp and waits until the next start trigger (INTTMmn from the master channel) is generated.

If two channels are used to output a PWM waveform, the period until the slave channel counts down to 0000H is the PWM output (TO0p) duty.

PWM output (TO0p) goes to the active level one clock after the master channel generates INTTMmn and goes to the inactive level when the TCRmp register of the slave channel becomes 0000H.

Caution To rewrite both timer data register mn (TDRmn) of the master channel and the TDRmp register of the slave channel, a write access is necessary two times. The timing at which the values of the TDRmn and TDRmp registers are loaded to the TCRmn and TCRmp registers is upon occurrence of INTTMmn of the master channel. Thus, when rewriting is performed split before and after occurrence of INTTMmn of the master channel, the TO0p pin cannot output the expected waveform. To rewrite both the TDRmn register of the master and the TDRmp register of the slave, therefore, be sure to rewrite both the registers immediately after INTTMmn is generated from the master channel.

Remark m: Unit number (m = 0), n: Master channel number (n = 0, 2, 4, 6)
p: Slave channel number (n < p ≤ 7)

Figure 7-69. Block Diagram of Operation as PWM Function

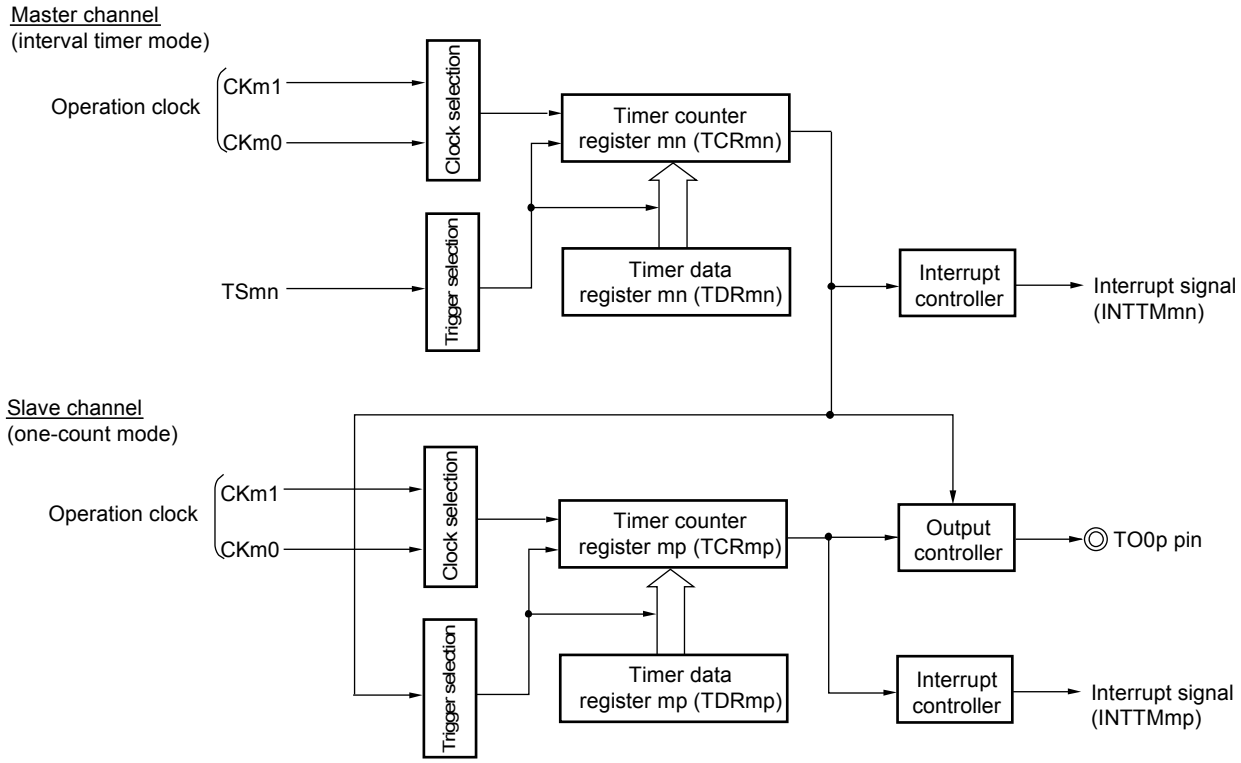

Remark m: Unit number (m = 0), n: Master channel number (n = 0, 2, 4, 6)
p: Slave channel number (n < p ≤ 7)

Figure 7-70. Example of Basic Timing of Operation as PWM Function

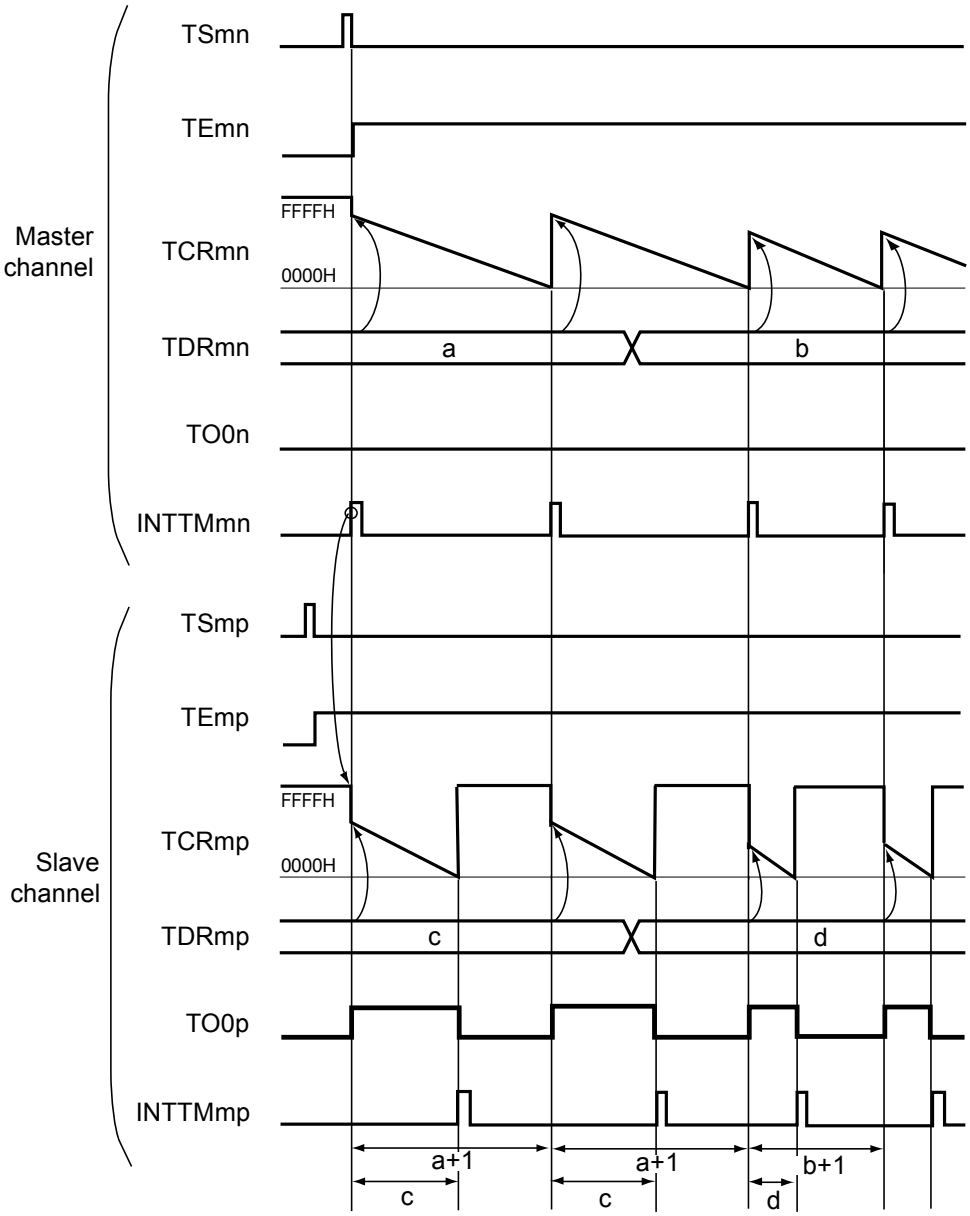

Remark 1. m: Unit number (m = 0), n: Master channel number (n = 0, 2, 4, 6)
p: Slave channel number (n < p ≤ 7)

2. TSmn, TSmp: Bit n, p of timer channel start register m (TSm)
TEmn, TEmp: Bit n, p of timer channel enable status register m (TEm)
TCRmn, TCRmp: Timer count registers mn, mp (TCRmn, TCRmp)
TDRmn, TDRmp: Timer data registers mn, mp (TDRmn, TDRmp)
TO0n, TO0p: TO0n and TO0p pins output signal

Figure 7-71. Example of Set Contents of Registers When PWM Function (Master Channel) Is Used

(a) Timer mode register mn (TMRmn)

	15	14	13	12	11	10	9	8	7	6	5	4	3	2	1	0
TMRmn	CKSmn1	CKSmn0		CCSmn	MAS TERmn	STSmn2	STSmn1	STSmn0	CISmn1	CISmn0			MDmn3	MDmn2	MDmn1	MDmn0
	1/0	0	0	0	1 Note	0	0	0	0	0	0	0	0	0	0	1

Operation mode of channel n
000B: Interval timer

Setting of operation when counting is started
1: Generates INTTMmn when counting is started.

Selection of TImn pin input edge
00B: Sets 00B because these are not used.

Start trigger selection
000B: Selects only software start.

Setting of the MASTERmn bit (channels 2, 4, 6)
1: Master channel.

Count clock selection
0: Selects operation clock (f_{MCK}).

Operation clock (f_{MCK}) selection
00B: Selects CKm0 as operation clock of channel n.
10B: Selects CKm1 as operation clock of channel n.

(b) Timer output register 0 (TO0)

	Bit n
TO0	TO0n 0

0: Outputs 0 from TO0n.

(c) Timer output enable register 0 (TOE0)

	Bit n
TOE0	TOE0n 0

0: Stops the TO0n output operation by counting operation.

(d) Timer output level register 0 (TOL0)

	Bit n
TOL0	TOL0n 0

0: Cleared to 0 when TOM0n = 0 (master channel output mode).

(e) Timer output mode register 0 (TOM0)

	Bit n
TOM0	TOM0n 0

0: Sets master channel output mode.

Note TMRm2, TMRm4, TMRm6: MASTERmn = 1
TMRm0: Fixed to 0

Remark m: Unit number (m = 0), n: Master channel number (n = 0, 2, 4, 6)

Figure 7-72. Example of Set Contents of Registers When PWM Function (Slave Channel) Is Used

(a) Timer mode register mp (TMRmp)

	15	14	13	12	11	10	9	8	7	6	5	4	3	2	1	0
TMRmp	CKSmp1	CKSmp0		CCSmp	M/S Note	STSmp2	STSmp1	STSmp0	CISmp1	CISmp0			MDmp3	MDmp2	MDmp1	MDmp0
	1/0	0	0	0	0	1	0	0	0	0	0	0	1	0	0	1

Operation mode of channel p
100B: One-count mode

Start trigger during operation
1: Trigger input is valid.

Selection of TImp pin input edge
00B: Sets 00B because these are not used.

Start trigger selection
100B: Selects INTTMmn of master channel.

Setting of MASTERmn bit (channels 2, 4, 6)
0: Slave channel
Setting of SPLITmp bit (channels 1, 3)
0: 16-bit timer mode

Count clock selection
0: Selects operation clock (f_{MCK}).

Operation clock (f_{MCK}) selection
00B: Selects CKm0 as operation clock of channel p.
10B: Selects CKm1 as operation clock of channel p.
* Make the same setting as master channel.

(b) Timer output register 0 (TO0)

	Bit p
TO0	TO0p 1/0

0: Outputs 0 from TO0p.
1: Outputs 1 from TO0p.

(c) Timer output enable register 0 (TOE0)

	Bit p
TOE0	TOE0p 1/0

0: Stops the TO0p output operation by counting operation.
1: Enables the TO0p output operation by counting operation.

(d) Timer output level register 0 (TOL0)

	Bit p
TOL0	TOL0p 1/0

0: Positive logic output (active-high)
1: Negative logic output (active-low)

(e) Timer output mode register 0 (TOM0)

	Bit p
TOM0	TOM0p 1

1: Sets the slave channel output mode.

Note TMRm2, TMRm4, TMRm6: MASTERmn bit
TMRm1, TMRm3: SPLITmp bit
TMRm5, TMRm7: Fixed to 0

Remark m: Unit number (m = 0), n: Master channel number (n = 0, 2, 4, 6)
p: Slave channel number (n < p ≤ 7)

Figure 7-73. Operation Procedure When PWM Function Is Used (1/2)

	Software Operation	Hardware Status
TAU default setting		Power-off status (Clock supply is stopped and writing to each register is disabled.)
	Sets the TAUmEN bit of peripheral enable register 0 (PER0) to 1. →	Power-on status. Each channel stops operating. (Clock supply is started and writing to each register is enabled.)
	Sets timer clock select register m (TPSm). Determines clock frequencies of CKm0 and CKm1.	
Channel default setting	Sets timer mode registers mn, mp (TMRmn, TMRmp) of two channels to be used (determines operation mode of channels). An interval (period) value is set to timer data register mn (TDRmn) of the master channel, and a duty factor is set to the TDRmp register of the slave channel.	Channel stops operating. (Clock is supplied and some power is consumed.)
	Sets slave channel. The TOM0p bit of timer output mode register m (TOM0) is set to 1 (slave channel output mode). Sets the TOL0p bit. Sets the TO0p bit and determines default level of the TO0p output. →	The TO0p pin goes into Hi-Z output state. The TO0p default setting level is output when the port mode register is in output mode and the port register is 0.
	Sets the TOE0p bit to 1 and enables operation of TO0p. →	TO0p does not change because channel stops operating.
	Clears the port register and port mode register to 0. →	The TO0p pin outputs the TO0p set level.

(**Remark** is listed on the next page.)

Figure 7-73. Operation Procedure When PWM Function Is Used (2/2)

Operation is resumed.

	Software Operation	Hardware Status
Operation start	Sets the TOE0p bit (slave) to 1 (only when operation is resumed). The TSmn (master) and TSmp (slave) bits of timer channel start register m (TSm) are set to 1 at the same time. The TSmn and TSmp bits automatically return to 0 because they are trigger bits.	TEmn = 1, TEmp = 1 When the master channel starts counting, INTTMmn is generated. Triggered by this interrupt, the slave channel also starts counting.
During operation	Set values of the TMRmn and TMRmp registers, TOM0n, TOM0p, TOL0n, and TOL0p bits cannot be changed. Set values of the TDRmn and TDRmp registers can be changed after INTTMmn of the master channel is generated. The TCRmn and TCRmp registers can always be read. The TSRmn and TSRmp registers are not used.	The counter of the master channel loads the TDRmn register value to timer count register mn (TCRmn), and counts down. When the count value reaches TCRmn = 0000H, INTTMmn output is generated. At the same time, the value of the TDRmn register is loaded to the TCRmn register, and the counter starts counting down again. At the slave channel, the value of the TDRmp register is loaded to the TCRmp register, triggered by INTTMmn of the master channel, and the counter starts counting down. The output level of TO0p becomes active one count clock after generation of the INTTMmn output from the master channel. It becomes inactive when TCRmp = 0000H, and the counting operation is stopped. After that, the above operation is repeated.
Operation stop	The TTmn (master) and TTmp (slave) bits are set to 1 at the same time. The TTmn and TTmp bits automatically return to 0 because they are trigger bits.	TEmn, TEmp = 0, and count operation stops. The TCRmn and TCRmp registers hold count value and stop. The TO0p output is not initialized but holds current status.
	The TOE0p bit of slave channel is cleared to 0 and value is set to the TO0p bit.	The TO0p pin outputs the TO0p set level.
TAU stop	To hold the TO0p pin output level Clears the TO0p bit to 0 after the value to be held is set to the port register. When holding the TO0p pin output level is not necessary Setting not required.	The TO0p pin output level is held by port function.
	The TAUmEN bit of the PER0 register is cleared to 0.	Power-off status All circuits are initialized and SFR of each channel is also initialized. (The TO0p bit is cleared to 0 and the TO0p pin is set to port mode.)

Remark m: Unit number (m = 0), n: Master channel number (n = 0, 2, 4, 6)
p: Slave channel number (n < p ≤ 7)

7.9.3 Operation as multiple PWM output function

By extending the PWM function and using multiple slave channels, many PWM waveforms with different duty values can be output.

For example, when using two slave channels, the period and duty factor of an output pulse can be calculated by the following expressions.

Pulse period = {Set value of TDRmn (master) + 1} × Count clock period
Duty factor 1 [%] = {Set value of TDRmp (slave 1)}/{Set value of TDRmn (master) + 1} × 100
Duty factor 2 [%] = {Set value of TDRmq (slave 2)}/{Set value of TDRmn (master) + 1} × 100

Remark Although the duty factor exceeds 100% if the set value of TDRmp (slave 1) > {set value of TDRmn (master) + 1} or if the {set value of TDRmq (slave 2)} > {set value of TDRmn (master) + 1}, it is summarized into 100% output.

Timer count register mn (TCRmn) of the master channel operates in the interval timer mode and counts the periods.

The TCRmp register of the slave channel 1 operates in one-count mode, counts the duty factor, and outputs a PWM waveform from the TO0p pin. The TCRmp register loads the value of timer data register mp (TDRmp), using INTTMmn of the master channel as a start trigger, and starts counting down. When TCRmp = 0000H, TCRmp outputs INTTMmp and stops counting until the next start trigger (INTTMmn of the master channel) has been input. The output level of TOmp becomes active one count clock after generation of INTTMmn from the master channel, and inactive when TCRmp = 0000H.

In the same way as the TCRmp register of the slave channel 1, the TCRmq register of the slave channel 2 operates in one-count mode, counts the duty factor, and outputs a PWM waveform from the TOmq pin. The TCRmq register loads the value of the TDRmq register, using INTTMmn of the master channel as a start trigger, and starts counting down. When TCRmq = 0000H, the TCRmq register outputs INTTMmq and stops counting until the next start trigger (INTTMmn of the master channel) has been input. The output level of TO0q becomes active one count clock after generation of INTTMmn from the master channel, and inactive when TCRmq = 0000H.

When channel 0 is used as the master channel as above, up to seven types of PWM signals can be output at the same time.

Caution **To rewrite both timer data register mn (TDRmn) of the master channel and the TDRmp register of the slave channel 1, write access is necessary at least twice. Since the values of the TDRmn and TDRmp registers are loaded to the TCRmn and TCRmp registers after INTTMmn is generated from the master channel, if rewriting is performed separately before and after generation of INTTMmn from the master channel, the TO0p pin cannot output the expected waveform. To rewrite both the TDRmn register of the master and the TDRmp register of the slave, be sure to rewrite both the registers immediately after INTTMmn is generated from the master channel (This applies also to the TDRmq register of the slave channel 2).**

Remark m: Unit number (m = 0), n: Master channel number (n = 0, 2, 4)
p: Slave channel number 1, q: Slave channel number 2
n < p < q ≤ 7 (Where p and q are integers greater than n)

Figure 7-74. Block Diagram of Operation as Multiple PWM Output Function (output two types of PWMs)

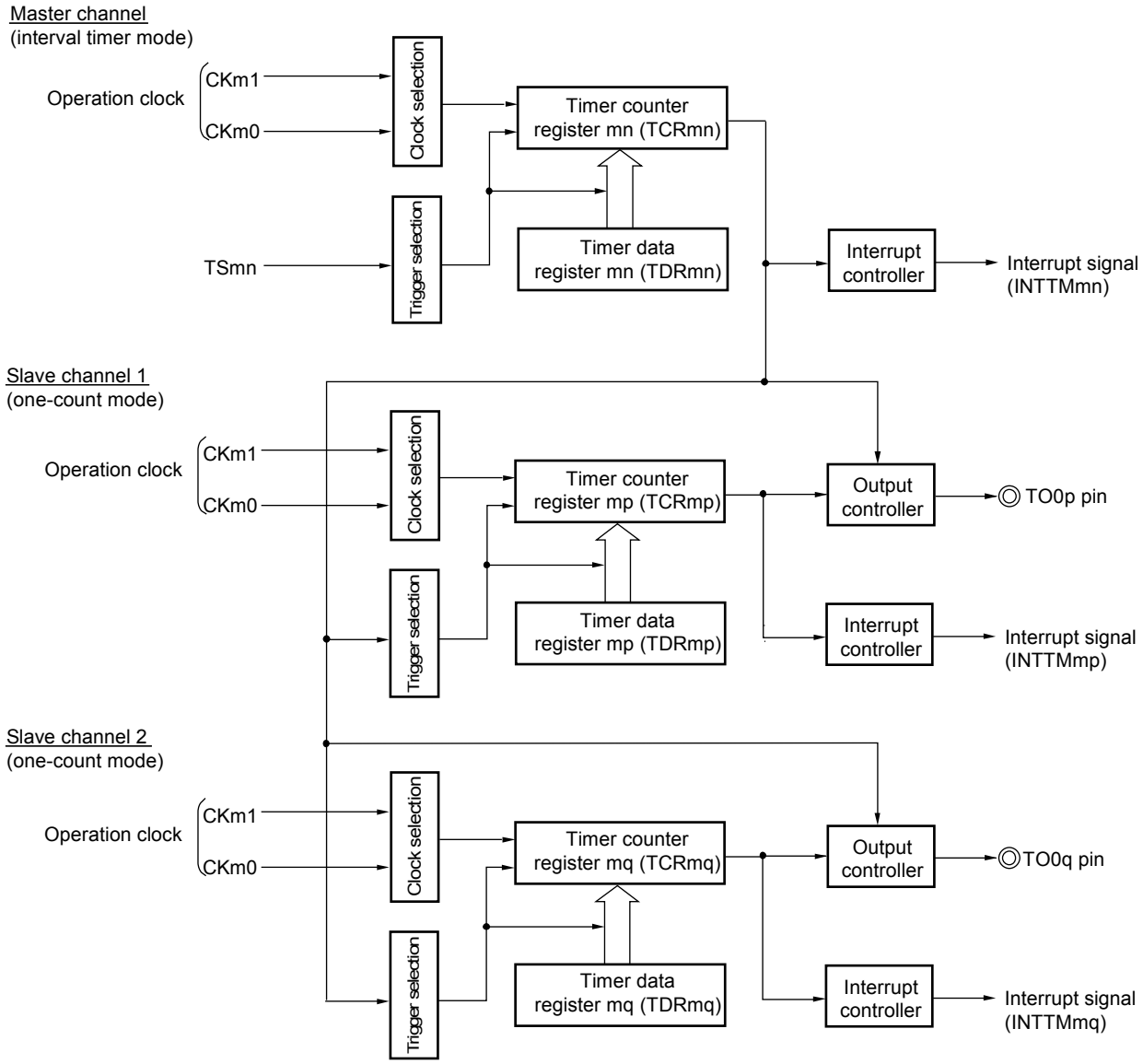

Remark m: Unit number (m = 0), n: Master channel number (n = 0, 2, 4)
p: Slave channel number 1, q: Slave channel number 2
n < p < q ≤ 7 (Where p and q are integers greater than n)

Figure 7-75. Example of Basic Timing of Operation as Multiple PWM Output Function (Output two types of PWMs)

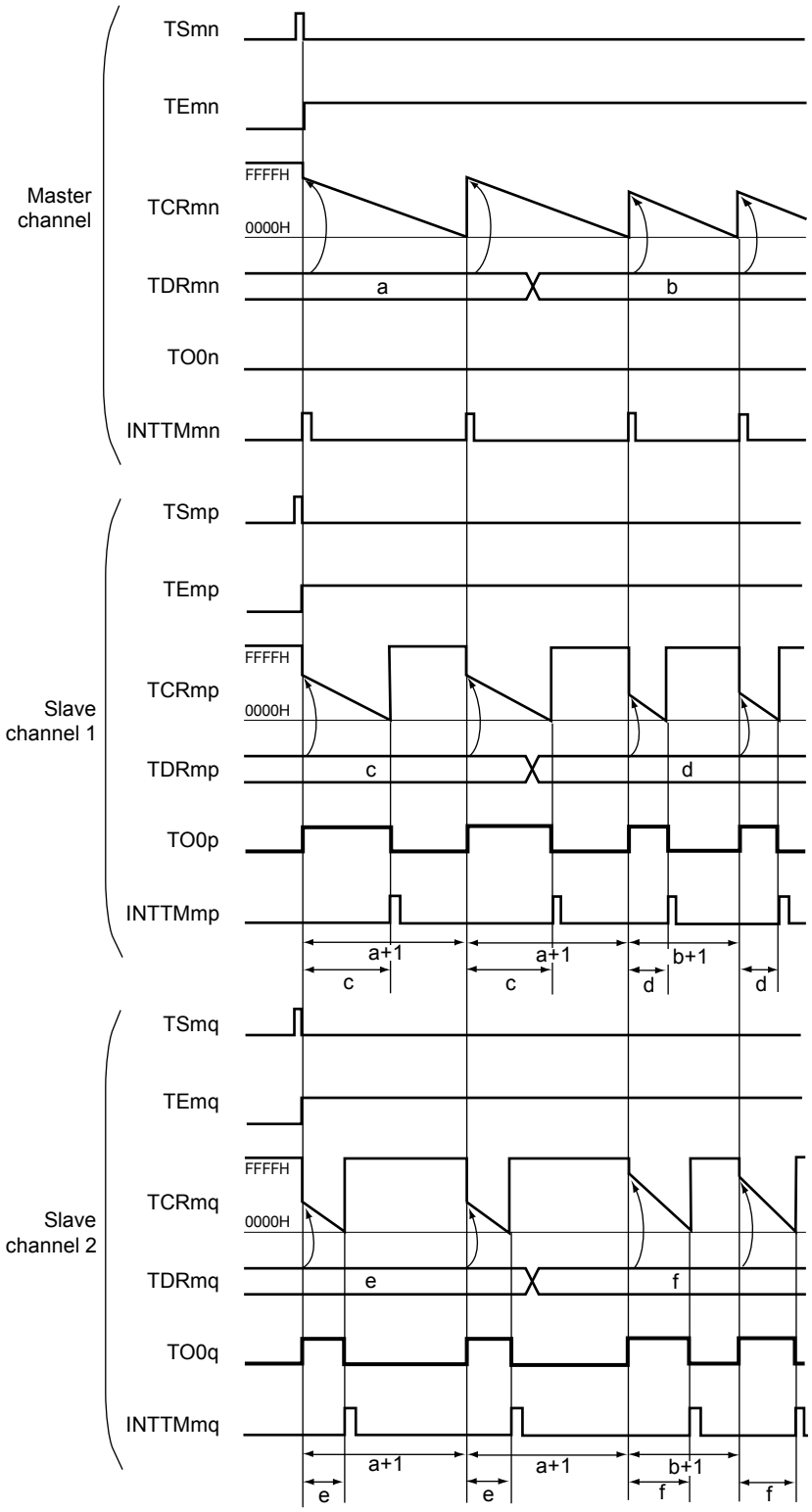

(**Remarks** are listed on the next page.)

Remarks 1. m: Unit number (m = 0), n: Master channel number (n = 0, 2, 4)
p: Slave channel number 1, q: Slave channel number 2
n < p < q ≤ 7 (Where p and q are integers greater than n)

2. TSmn, TSmp, TSmq: Bit n, p, q of timer channel start register m (TSm)
TEmn, TEmp, TEmq: Bit n, p, q of timer channel enable status register m (TEm)
TCRmn, TCRmp, TCRmq: Timer count registers mn, mp, mq (TCRmn, TCRmp, TCRmq)
TDRmn, TDRmp, TDRmq: Timer data registers mn, mp, mq (TDRmn, TDRmp, TDRmq)
TO0n, TO0p, TO0q: TO0n, TO0p, and TO0q pins output signal

Figure 7-76. Example of Set Contents of Registers When Multiple PWM Output Function (Master Channel) Is Used

(a) Timer mode register mn (TMRmn)

	15	14	13	12	11	10	9	8	7	6	5	4	3	2	1	0
TMRmn	CKSmn1	CKSmn0		CCSmn	MASTERmn	STSmn2	STSmn1	STSmn0	CISmn1	CISmn0			MDmn3	MDmn2	MDmn1	MDmn0
	1/0	0	0	0	1 Note	0	0	0	0	0	0	0	0	0	0	1

Operation mode of channel n
000B: Interval timer

Setting of operation when counting is started
1: Generates INTTMmn when counting is started.

Selection of TImn pin input edge
00B: Sets 00B because these are not used.

Start trigger selection
000B: Selects only software start.

Setting of MASTERmn bit (channels 2, 4, 6)
1: Master channel.

Count clock selection
0: Selects operation clock (f_{MCK}).

Operation clock (f_{MCK}) selection
00B: Selects CKm0 as operation clock of channel n.
10B: Selects CKm1 as operation clock of channel n.

(b) Timer output register 0 (TO0)

	Bit n
TO0	TO0n 0

0: Outputs 0 from TO0n.

(c) Timer output enable register 0 (TOE0)

	Bit n
TOE0	TOE0n 0

0: Stops the TO0n output operation by counting operation.

(d) Timer output level register 0 (TOL0)

	Bit n
TOL0	TOL0n 0

0: Cleared to 0 when TOM0n = 0 (master channel output mode).

(e) Timer output mode register 0 (TOM0)

	Bit n
TOM0	TOM0n 0

0: Sets master channel output mode.

Note TMRm2, TMRm4, TMRm6: MASTERmn = 1
TMRm0: Fixed to 0

Remark m: Unit number (m = 0), n: Master channel number (n = 0, 2, 4)

Figure 7-77. Example of Set Contents of Registers
When Multiple PWM Output Function (Slave Channel) Is Used (output two types of PWMs)

(a) Timer mode register mp, mq (TMRmp, TMRmq)

	15	14	13	12	11	10	9	8	7	6	5	4	3	2	1	0
TMRmp	CKSmp1	CKSmp0		CCSmp	M/S[Note]	STSmp2	STSmp1	STSmp0	CISmp1	CISmp0			MDmp3	MDmp2	MDmp1	MDmp0
	1/0	0	0	0	0	1	0	0	0	0	0	0	1	0	0	1
TMRmq	CKSmq1	CKSmq0		CCSmq	M/S[Note]	STSmq2	STSmq1	STSmq0	CISmq1	CISmq0			MDmq3	MDmq2	MDmq1	MDmq0
	1/0	0	0	0	0	1	0	0	0	0	0	0	1	0	0	1

Operation mode of channel p, q
100B: One-count mode

Start trigger during operation
1: Trigger input is valid.

Selection of TImp and TImq pins input edge
00B: Sets 00B because these are not used.

Start trigger selection
100B: Selects INTTMmn of master channel.

Setting of MASTERmp, MASTERmq bits (channels 2, 4, 6)
0: Independent channel operation function.

Setting of SPLITmp, SPLITmq bits (channels 1, 3)
1: 16-bit timer mode.

Count clock selection
0: Selects operation clock (f_{MCK}).

Operation clock (f_{MCK}) selection
00B: Selects CKm0 as operation clock of channel p, q.
10B: Selects CKm1 as operation clock of channel p, q.
* Make the same setting as master channel.

(b) Timer output register 0 (TO0)

	Bit q	Bit p
TO0	TO0q	TO0p
	1/0	1/0

0: Outputs 0 from TO0p or TO0q.
1: Outputs 1 from TO0p or TO0q.

(c) Timer output enable register 0 (TOE0)

	Bit q	Bit p
TOE0	TOE0q	TOE0p
	1/0	1/0

0: Stops the TO0p or TO0q output operation by counting operation.
1: Enables the TO0p or TO0q output operation by counting operation.

(d) Timer output level register 0 (TOL0)

	Bit q	Bit p
TOL0	TOL0q	TOL0p
	1/0	1/0

0: Positive logic output (active-high)
1: Negative logic output (active-low)

(e) Timer output mode register 0 (TOM0)

	Bit q	Bit p
TOM0	TOM0q	TOM0p
	1	1

1: Sets the slave channel output mode.

Note TMRm2, TMRm4, TMRm6: MASTERmp, MASTERmq bit
TMRm1, TMRm3: SPLITmp, SPLITmq bit
TMRm5, TMRm7: Fixed to 0

Remark m: Unit number (m = 0), n: Master channel number (n = 0, 2, 4)
p: Slave channel number 1, q: Slave channel number 2
n < p < q ≤ 7 (Where p and q are integers greater than n)

Figure 7-78. Operation Procedure When Multiple PWM Output Function Is Used (1/2)

	Software Operation	Hardware Status
TAU default setting		Power-off status (Clock supply is stopped and writing to each register is disabled.)
	Sets the TAUmEN bit of peripheral enable register 0 (PER0) to 1. →	Power-on status. Each channel stops operating. (Clock supply is started and writing to each register is enabled.)
	Sets timer clock select register m (TPSm). Determines clock frequencies of CKm0 and CKm1.	
Channel default setting	Sets timer mode registers mn, mp, 0q (TMRmn, TMRmp, TMRmq) of each channel to be used (determines operation mode of channels). An interval (period) value is set to timer data register mn (TDRmn) of the master channel, and a duty factor is set to the TDRmp and TDRmq registers of the slave channels.	Channel stops operating. (Clock is supplied and some power is consumed.)
	Sets slave channels. The TOM0p and TOM0q bits of timer output mode register m (TOM0) are set to 1 (slave channel output mode). Sets the TOL0p and TOL0q bits. Sets the TO0p and TO0q bits and determines default level of the TO0p and TO0q outputs. →	The TO0p and TO0q pins go into Hi-Z output state. The TO0p and TO0q default setting levels are output when the port mode register is in output mode and the port register is 0.
	Sets the TOE0p and TOE0q bits to 1 and enables operation of TO0p and TO0q. →	TO0p and TO0q do not change because channels stop operating.
	Clears the port register and port mode register to 0. →	The TO0p and TO0q pins output the TO0p and TO0q set levels.

(**Remark** is listed on the next page.)

Figure 7-78. Operation Procedure When Multiple PWM Output Function Is Used (2/2)

Operation is resumed.

	Software Operation	Hardware Status
Operation start	(Sets the TOE0p and TOE0q (slave) bits to 1 only when resuming operation.) The TSmn bit (master), and TSmp and TSmq (slave) bits of timer channel start register m (TSm) are set to 1 at the same time. The TSmn, TSmp, and TSmq bits automatically return to 0 because they are trigger bits.	TEmn = 1, TEmp, TEmq = 1 When the master channel starts counting, INTTMmn is generated. Triggered by this interrupt, the slave channel also starts counting.
During operation	Set values of the TMRmn, TMRmp, TMRmq registers, TOM0n, TOM0p, TOM0q, TOL0n, TOL0p, and TOL0q bits cannot be changed. Set values of the TDRmn, TDRmp, and TDRmq registers can be changed after INTTMmn of the master channel is generated. The TCRmn, TCRmp, and TCRmq registers can always be read. The TSRmn, TSRmp, and TSR0q registers are not used.	The counter of the master channel loads the TDRmn register value to timer count register mn (TCRmn) and counts down. When the count value reaches TCRmn = 0000H, INTTMmn output is generated. At the same time, the value of the TDRmn register is loaded to the TCRmn register, and the counter starts counting down again. At the slave channel 1, the values of the TDRmp register are transferred to the TCRmp register, triggered by INTTMmn of the master channel, and the counter starts counting down. The output levels of TO0p become active one count clock after generation of the INTTMmn output from the master channel. It becomes inactive when TCRmp = 0000H, and the counting operation is stopped. At the slave channel 2, the values of the TDRmq register are transferred to TCRmq register, triggered by INTTMmn of the master channel, and the counter starts counting down. The output levels of TO0q become active one count clock after generation of the INTTMmn output from the master channel. It becomes inactive when TCRmq = 0000H, and the counting operation is stopped. After that, the above operation is repeated.
Operation stop	The TTmn bit (master), TTmp, and TTmq (slave) bits are set to 1 at the same time. The TTmn, TTmp, and TTmq bits automatically return to 0 because they are trigger bits.	TEmn, TEmp, TEmq = 0, and count operation stops. The TCRmn, TCRmp, and TCRmq registers hold count value and stop. The TO0p and TO0q output are not initialized but hold current status.
	The TOE0p and TOE0q bits of slave channels are cleared to 0 and value is set to the TO0p and TO0q bits.	The TO0p and TO0q pins output the TO0p and TO0q set levels.
TAU stop	To hold the TO0p and TO0q pin output levels Clears the TO0p and TO0q bits to 0 after the value to be held is set to the port register. When holding the TO0p and TO0q pin output levels are not necessary Setting not required	The TO0p and TO0q pin output levels are held by port function.
	The TAUmEN bit of the PER0 register is cleared to 0.	Power-off status All circuits are initialized and SFR of each channel is also initialized. (The TO0p and TO0q bits are cleared to 0 and the TO0p and TO0q pins are set to port mode.)

Remark m: Unit number (m = 0), n: Master channel number (n = 0, 2, 4)
p: Slave channel number 1, q: Slave channel number 2
n < p < q ≤ 7 (Where p and q are a consecutive integer greater than n)

7.10 Cautions When Using Timer Array Unit

7.10.1 Cautions when using timer output

Pins may be assigned multiplexed timer output and other alternate functions. The assignment depends on the product. If you intend to use a timer output, set the outputs from all other multiplexed pin functions to their initial values.
For details, see **5.5 Register Settings When Using Alternate Function**.

CHAPTER 8 REAL-TIME CLOCK

8.1 Functions of Real-time Clock

The real-time clock has the following features.

- Having counters of year, month, week, day, hour, minute, and second, and can count up to 99 years.
- Constant-period interrupt function (period: 0.5 seconds, 1 second, 1 minute, 1 hour, 1 day, 1 month)
- Alarm interrupt function (alarm: week, hour, minute)
- Pin output function of 1 Hz

The real-time clock interrupt signal (INTRTC) can be utilized for wakeup from STOP mode and triggering an A/D converter's SNOOZE mode.

Caution The count of year, month, week, day, hour, minutes and second can only be performed when a subsystem clock (f_{SUB} = 32.768 kHz) is selected as the operation clock of the real-time clock. When the low-speed oscillation clock (f_{IL} = 15 kHz) is selected, only the constant-period interrupt function is available. However, the constant-period interrupt interval when f_{IL} is selected will be calculated with the constant-period (the value selected with RTCC0 register) × f_{SUB}/f_{IL}.

8.2 Configuration of Real-time Clock

The real-time clock includes the following hardware.

Table 8-1. Configuration of Real-time Clock

Item	Configuration
Counter	Internal counter (16-bit)
Control registers	Peripheral enable register 0 (PER0)
	Subsystem clock supply mode control register (OSMC)
	Real-time clock control register 0 (RTCC0)
	Real-time clock control register 1 (RTCC1)
	Second count register (SEC)
	Minute count register (MIN)
	Hour count register (HOUR)
	Day count register (DAY)
	Week count register (WEEK)
	Month count register (MONTH)
	Year count register (YEAR)
	Watch error correction register (SUBCUD)
	Alarm minute register (ALARMWM)
	Alarm hour register (ALARMWH)
	Alarm week register (ALARMWW)

Figure 8-1. Block Diagram of Real-time Clock

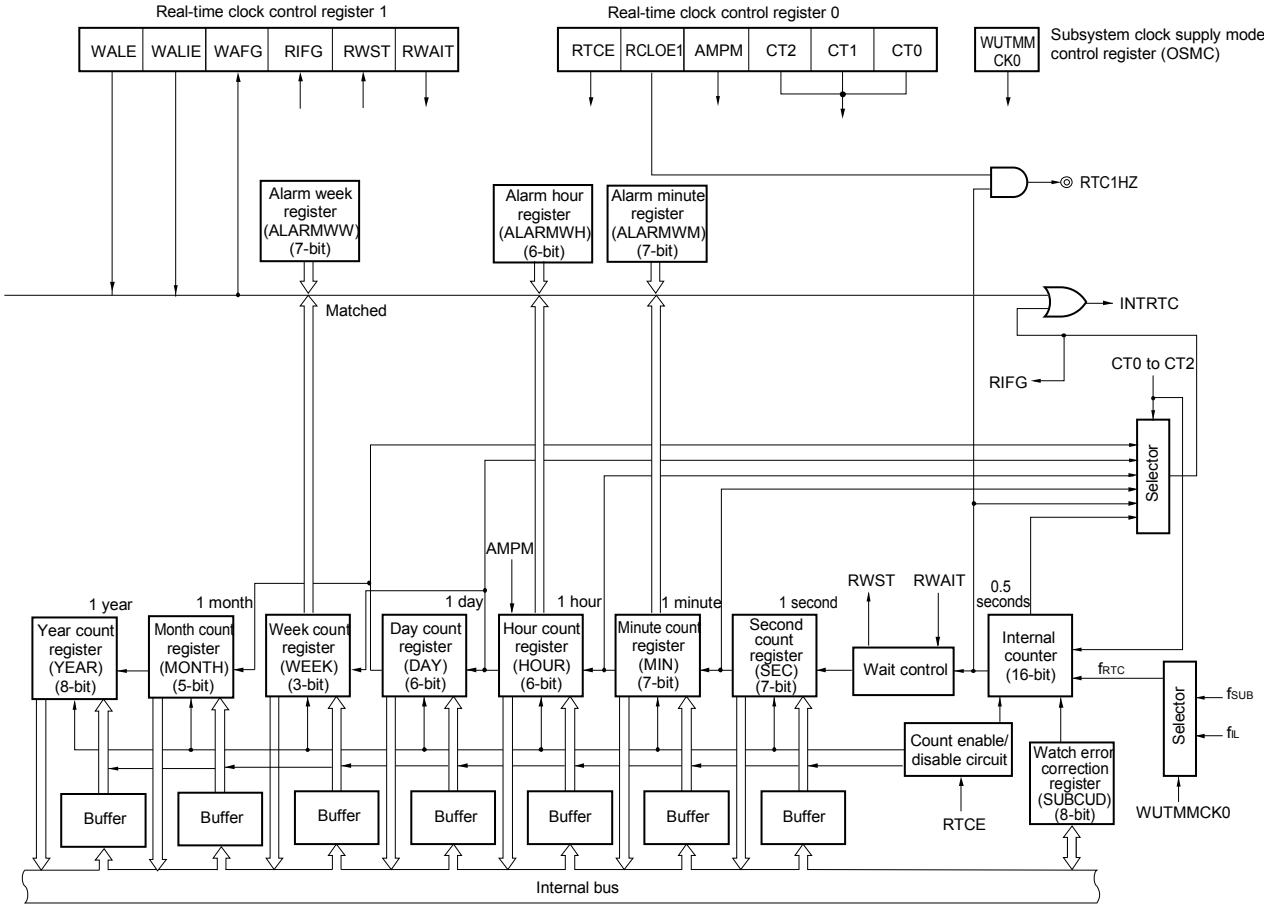

Caution The count of year, month, week, day, hour, minutes and second can only be performed when a subsystem clock (f_{SUB} = 32.768 kHz) is selected as the operation clock of the real-time clock. When the low-speed oscillation clock (f_{IL} = 15 kHz) is selected, only the constant-period interrupt function is available. However, the constant-period interrupt interval when f_{IL} is selected will be calculated with the constant-period (the value selected with RTCC0 register) × f_{SUB}/f_{IL}.

8.3 Registers Controlling Real-time Clock

The real-time clock is controlled by the following registers.

- Peripheral enable register 0 (PER0)
- Subsystem clock supply mode control register (OSMC)
- Real-time clock control register 0 (RTCC0)
- Real-time clock control register 1 (RTCC1)
- Second count register (SEC)
- Minute count register (MIN)
- Hour count register (HOUR)
- Day count register (DAY)
- Week count register (WEEK)
- Month count register (MONTH)
- Year count register (YEAR)
- Watch error correction register (SUBCUD)
- Alarm minute register (ALARMWM)
- Alarm hour register (ALARMWH)
- Alarm week register (ALARMWW)
- Port mode register 3 (PM3)
- Port register 3 (P3)

8.3.1 Peripheral enable register 0 (PER0)

This register is used to enable or disable supplying the clock to the peripheral hardware. Clock supply to a hardware macro that is not used is stopped in order to reduce the power consumption and noise.

When the real-time clock is used, be sure to set bit 7 (RTCEN) of this register to 1.

The PER0 register can be set by a 1-bit or 8-bit memory manipulation instruction.

Reset signal generation clears this register to 00H.

Figure 8-2. Format of Peripheral Enable Register 0 (PER0)

Address: F00F0H After reset: 00H R/W

Symbol	<7>	6	<5>	<4>	<3>	<2>	1	<0>
PER0	RTCEN	0	ADCEN	IICA0EN	SAU1EN	SAU0EN	0	TAU0EN

RTCEN	Control of real-time clock (RTC) and 12-bit interval timer input clock supply
0	Stops input clock supply. ● SFR used by the real-time clock (RTC) and 12-bit interval timer cannot be written. ● The real-time clock (RTC) and 12-bit interval timer are in the reset status.
1	Enables input clock supply. ● SFR used by the real-time clock (RTC) and 12-bit interval timer can be read and written.

Cautions 1. When using the real-time clock, first set the RTCEN bit to 1 and then set the following registers, while oscillation of the count clock (f_{RTC}) is stable. If RTCEN = 0, writing to the control registers of the real-time clock is ignored, and, even if the registers are read, only the default values are read (except for the subsystem clock supply mode control register (OSMC), port mode register 3 (PM3), port register 3 (P3)).

- **Real-time clock control register 0 (RTCC0)**
- **Real-time clock control register 1 (RTCC1)**
- **Second count register (SEC)**
- **Minute count register (MIN)**
- **Hour count register (HOUR)**
- **Day count register (DAY)**
- **Week count register (WEEK)**
- **Month count register (MONTH)**
- **Year count register (YEAR)**
- **Watch error correction register (SUBCUD)**
- **Alarm minute register (ALARMWM)**
- **Alarm hour register (ALARMWH)**
- **Alarm week register (ALARMWW)**

2. The subsystem clock supply to peripheral functions other than the real-time clock and 12-bit interval timer can be stopped in STOP mode or HALT mode when the subsystem clock is used, by setting the RTCLPC bit of the subsystem clock supply mode control register (OSMC) to 1. In this case, set the RTCEN bit of the PER0 register to 1 and the other bits (bits 0 to 6) to 0.

3. Be sure to clear the bits 1 and 6 to “0”.

8.3.2 Subsystem clock supply mode control register (OSMC)

The WUTMMCK0 bit can be used to select the count clock (f_{RTC}) of the real-time clock.

In addition, by stopping clock functions that are unnecessary, the RTCLPC bit can be used to reduce power consumption. For details about setting the RTCLPC bit, see **CHAPTER 6 CLOCK GENERATOR**.

The OSMC register can be set by an 8-bit memory manipulation instruction.

Reset signal generation clears this register to 00H.

Figure 8-3. Format of Subsystem Clock Supply Mode Control Register (OSMC)

Address: F00F3H After reset: 00H R/W

Symbol	7	6	5	4	3	2	1	0
OSMC	RTCLPC	0	0	WUTMMCK0	0	0	0	0

WUTMMCK0	Selection of operation clock (f_{RTC}) for real-time clock and 12-bit interval timer.
0	Subsystem clock (f_{SUB})
1	Low-speed on-chip oscillator clock (f_{IL})

Caution The count of year, month, week, day, hour, minutes and second can only be performed when a subsystem clock (f_{SUB} = 32.768 kHz) is selected as the operation clock of the real-time clock. When the low-speed oscillation clock (f_{IL} = 15 kHz) is selected, only the constant-period interrupt function is available. However, the constant-period interrupt interval when f_{IL} is selected will be calculated with the constant-period (the value selected with RTCC0 register) × f_{SUB}/f_{IL}.

8.3.3 Real-time clock control register 0 (RTCC0)

The RTCC0 register is an 8-bit register that is used to start or stop the real-time clock operation, control the RTC1HZ pin, and set a 12- or 24-hour system and the constant-period interrupt function.

The RTCC0 register can be set by a 1-bit or 8-bit memory manipulation instruction.

Reset signal generation clears this register to 00H.

Figure 8-4. Format of Real-time Clock Control Register 0 (RTCC0)

Address: FFF9DH After reset: 00H R/W

Symbol	<7>	6	<5>	4	3	2	1	0
RTCC0	RTCE	0	RCLOE1	0	AMPM	CT2	CT1	CT0

RTCE	Real-time clock operation control
0	Stops counter operation.
1	Starts counter operation.

RCLOE1	RTC1HZ pin output control
0	Disables output of the RTC1HZ pin (1 Hz).
1	Enables output of the RTC1HZ pin (1 Hz).

AMPM	Selection of 12-/24-hour system
0	12-hour system (a.m. and p.m. are displayed.)
1	24-hour system

- Rewrite the AMPM bit value after setting the RWAIT bit (bit 0 of real-time clock control register 1 (RTCC1)) to 1. If the AMPM bit value is changed, the values of the hour count register (HOUR) change according to the specified time system.
- Table 8-2 shows the displayed time digits that are displayed.

CT2	CT1	CT0	Constant-period interrupt (INTRTC) selection
0	0	0	Does not use constant-period interrupt function.
0	0	1	Once per 0.5 s (synchronized with second count up)
0	1	0	Once per 1 s (same time as second count up)
0	1	1	Once per 1 m (second 00 of every minute)
1	0	0	Once per 1 hour (minute 00 and second 00 of every hour)
1	0	1	Once per 1 day (hour 00, minute 00, and second 00 of every day)
1	1	×	Once per 1 month (Day 1, hour 00 a.m., minute 00, and second 00 of every month)

When changing the values of the CT2 to CT0 bits while the counter operates (RTCE = 1), rewrite the values of the CT2 to CT0 bits after disabling interrupt servicing INTRTC by using the interrupt mask flag register. Furthermore, after rewriting the values of the CT2 to CT0 bits, enable interrupt servicing after clearing the RIFG and RTCIF flags.

Cautions 1. Do not change the value of the RTCLOE1 bit when RTCE = 1.

2. 1 Hz is not output even if RCCOE1 is set to 1 when RTCE = 0.

Remark ×: don't care

8.3.4 Real-time clock control register 1 (RTCC1)

The RTCC1 register is an 8-bit register that is used to control the alarm interrupt function and the wait time of the counter.

The RTCC1 register can be set by a 1-bit or 8-bit memory manipulation instruction.

Reset signal generation clears this register to 00H.

Figure 8-5. Format of Real-time Clock Control Register 1 (RTCC1) (1/2)

Address: FFF9EH After reset: 00H R/W

Symbol	<7>	<6>	5	<4>	<3>	2	<1>	<0>
RTCC1	WALE	WALIE	0	WAFG	RIFG	0	RWST	RWAIT

WALE	Alarm operation control
0	Match operation is invalid.
1	Match operation is valid.
When setting a value to the WALE bit while the counter operates (RTCE = 1) and WALIE = 1, rewrite the WALE bit after disabling interrupt servicing INTRTC by using the interrupt mask flag register. Furthermore, clear the WAFG and RTCIF flags after rewriting the WALE bit. When setting each alarm register (WALIE flag of real-time clock control register 1 (RTCC1), the alarm minute register (ALARMWM), the alarm hour register (ALARMWH), and the alarm week register (ALARMWW)), set match operation to be invalid (“0”) for the WALE bit.	

WALIE	Control of alarm interrupt (INTRTC) function operation
0	Does not generate interrupt on matching of alarm.
1	Generates interrupt on matching of alarm.

WAFG	Alarm detection status flag
0	Alarm mismatch
1	Detection of matching of alarm
This is a status flag that indicates detection of matching with the alarm. It is valid only when WALE = 1 and is set to “1” one cycle of f_{RTC} after matching of the alarm is detected. This flag is cleared when “0” is written to it. Writing “1” to it is invalid.	

RIFG	Constant-period interrupt status flag
0	Constant-period interrupt is not generated.
1	Constant-period interrupt is generated.
This flag indicates the status of generation of the constant-period interrupt. When the constant-period interrupt is generated, it is set to “1”. This flag is cleared when “0” is written to it. Writing “1” to it is invalid.	

Figure 8-5. Format of Real-time Clock Control Register 1 (RTCC1) (2/2)

RWST	Wait status flag of real-time clock
0	Counter is operating.
1	Mode to read or write counter value
This status flag indicates whether the setting of the RWAIT bit is valid. Before reading or writing the counter value, confirm that the value of this flag is 1.	

RWAIT	Wait control of real-time clock
0	Sets counter operation.
1	Stops SEC to YEAR counters. Mode to read or write counter value
This bit controls the operation of the counter. Be sure to write “1” to it to read or write the counter value. As the internal counter (16-bit) is continuing to run, complete reading or writing within one second and turn back to 0. When RWAIT = 1, it takes up to one cycle of f_{RTC} until the counter value can be read or written (RWST = 1).[Note1, 2] When the internal counter (16-bit) overflowed while RWAIT = 1, it keeps the event of overflow until RWAIT = 0, then counts up. However, when it wrote a value to second count register, it will not keep the overflow event.	

Notes1. If RWAIT is set to 1 within 1 f_{RTC} clock cycle after setting RTCE to 1, it might take two operation clock (f_{RTC}) cycles to be set RWST bit to 1..

2. If RWAIT is set to 1 within 1 f_{RTC} clock cycle after return from standby (HALT mode, STOP mode or SNOOZE mode), it might take two operation clock (f_{RTC}) cycles to be set RWST bit to 1.

Caution **If writing is performed to the RTCC1 register with a 1-bit manipulation instruction, the RIFG flag and WAFG flag may be cleared. Therefore, to perform writing to the RTCC1 register, be sure to use an 8-bit manipulation instruction. To prevent the RIFG flag and WAFG flag from being cleared during writing, disable writing by setting 1 to the corresponding bit. If the RIFG flag and WAFG flag are not used and the value may be changed, the RTCC1 register may be written by using a 1-bit manipulation instruction.**

Remarks 1. Fixed-cycle interrupts and alarm match interrupts use the same interrupt source (INTRTC). When using these two types of interrupts at the same time, which interrupt occurred can be judged by checking the fixed-cycle interrupt status flag (RIFG) and the alarm detection status flag (WAFG) upon INTRTC occurrence.

2. The internal counter (16 bits) is cleared when the second count register (SEC) is written.

8.3.5 Second count register (SEC)

The SEC register is an 8-bit register that takes a value of 0 to 59 (decimal) and indicates the count value of seconds.

It counts up when the internal counter (16-bit) overflows.

When data is written to this register, it is written to a buffer and then to the counter up to two cycles of f_{RTC} later. Set a decimal value of 00 to 59 to this register in BCD code.

The SEC register can be set by an 8-bit memory manipulation instruction.

Reset signal generation clears this register to 00H.

Figure 8-6. Format of Second Count Register (SEC)

Address: FFF92H After reset: 00H R/W

Symbol	7	6	5	4	3	2	1	0
SEC	0	SEC40	SEC20	SEC10	SEC8	SEC4	SEC2	SEC1

Remark The internal counter (16 bits) is cleared when the second count register (SEC) is written.

Caution When it reads or writes from/to the register while the counter is in operation (RTCE = 1), follow the procedures described in the section 8.4.3 Reading/writing real-time clock.

8.3.6 Minute count register (MIN)

The MIN register is an 8-bit register that takes a value of 0 to 59 (decimal) and indicates the count value of minutes.

It counts up when the second counter overflows.

When data is written to this register, it is written to a buffer and then to the counter up to two cycles of f_{RTC} later. Even if the second count register overflows while this register is being written, this register ignores the overflow and is set to the value written. Set a decimal value of 00 to 59 to this register in BCD code.

The MIN register can be set by an 8-bit memory manipulation instruction.

Reset signal generation clears this register to 00H.

Figure 8-7. Format of Minute Count Register (MIN)

Address: FFF93H After reset: 00H R/W

Symbol	7	6	5	4	3	2	1	0
MIN	0	MIN40	MIN20	MIN10	MIN8	MIN4	MIN2	MIN1

Caution When it reads or writes from/to the register while the counter is in operation (RTCE = 1), follow the procedures described in the section 8.4.3 Reading/writing real-time clock.

8.3.7 Hour count register (HOUR)

The HOUR register is an 8-bit register that takes a value of 00 to 23 or 01 to 12 and 21 to 32 (decimal) and indicates the count value of hours.

It counts up when the minute counter overflows.

When data is written to this register, it is written to a buffer and then to the counter up to two cycles of f_{RTC} later. Even if the minute count register overflows while this register is being written, this register ignores the overflow and is set to the value written. Specify a decimal value of 00 to 23, 01 to 12, or 21 to 32 by using BCD code according to the time system specified using bit 3 (AMPM) of real-time clock control register 0 (RTCC0).

If the AMPM bit value is changed, the values of the HOUR register change according to the specified time system.

The HOUR register can be set by an 8-bit memory manipulation instruction.

Reset signal generation clears this register to 12H.

However, the value of this register is 00H if the AMPM bit (bit 3 of the RTCC0 register) is set to 1 after reset.

Figure 8-8. Format of Hour Count Register (HOUR)

Address: FFF94H After reset: 12H R/W

Symbol	7	6	5	4	3	2	1	0
HOUR	0	0	HOUR20	HOUR10	HOUR8	HOUR4	HOUR2	HOUR1

Cautions 1. Bit 5 (HOUR20) of the HOUR register indicates AM(0)/PM(1) if AMPM = 0 (if the 12-hour system is selected).

2. When it reads or writes from/to the register while the counter is in operation (RTCE = 1), follow the procedures described in the section 8.4.3 Reading/writing real-time clock.

Table 8-2 shows the relationship between the setting value of the AMPM bit, the hour count register (HOUR) value, and time.

Table 8-2. Displayed Time Digits

24-Hour Display (AMPM = 1)		12-Hour Display (AMPM = 0)	
Time	HOUR Register	Time	HOUR Register
0	00H	12 a.m.	12H
1	01H	1 a.m.	01H
2	02H	2 a.m.	02H
3	03H	3 a.m.	03H
4	04H	4 a.m.	04H
5	05H	5 a.m.	05H
6	06H	6 a.m.	06H
7	07H	7 a.m.	07H
8	08H	8 a.m.	08H
9	09H	9 a.m.	09H
10	10H	10 a.m.	10H
11	11H	11 a.m.	11H
12	12H	12 p.m.	32H
13	13H	1 p.m.	21H
14	14H	2 p.m.	22H
15	15H	3 p.m.	23H
16	16H	4 p.m.	24H
17	17H	5 p.m.	25H
18	18H	6 p.m.	26H
19	19H	7 p.m.	27H
20	20H	8 p.m.	28H
21	21H	9 p.m.	29H
22	22H	10 p.m.	30H
23	23H	11 p.m.	31H

The HOUR register value is set to 12-hour display when the AMPM bit is “0” and to 24-hour display when the AMPM bit is “1”.

In 12-hour display, the fifth bit of the HOUR register displays 0 for AM and 1 for PM.

8.3.8 Day count register (DAY)

The DAY register is an 8-bit register that takes a value of 1 to 31 (decimal) and indicates the count value of days.

It counts up when the hour counter overflows.

This counter counts as follows.

- 01 to 31 (January, March, May, July, August, October, December)
- 01 to 30 (April, June, September, November)
- 01 to 29 (February, leap year)
- 01 to 28 (February, normal year)

When data is written to this register, it is written to a buffer and then to the counter up to two cycles of f_{RTC} later. Even if the hour count register overflows while this register is being written, this register ignores the overflow and is set to the value written. Set a decimal value of 01 to 31 to this register in BCD code.

The DAY register can be set by an 8-bit memory manipulation instruction.

Reset signal generation clears this register to 01H.

Figure 8-9. Format of Day Count Register (DAY)

Address: FFF96H After reset: 01H R/W

Symbol	7	6	5	4	3	2	1	0
DAY	0	0	DAY20	DAY10	DAY8	DAY4	DAY2	DAY1

Caution When it reads or writes from/to the register while the counter is in operation (RTCE = 1), follow the procedures described in the section 8.4.3 Reading/writing real-time clock.

8.3.9 Week count register (WEEK)

The WEEK register is an 8-bit register that takes a value of 0 to 6 (decimal) and indicates the count value of weekdays. It counts up in synchronization with the day counter.

When data is written to this register, it is written to a buffer and then to the counter up to two cycles of f_{RTC} later. Set a decimal value of 00 to 06 to this register in BCD code.

The WEEK register can be set by an 8-bit memory manipulation instruction.

Reset signal generation clears this register to 00H.

Figure 8-10. Format of Week Count Register (WEEK)

Address: FFF95H After reset: 00H R/W

Symbol	7	6	5	4	3	2	1	0
WEEK	0	0	0	0	0	WEEK4	WEEK2	WEEK1

Cautions 1. The value corresponding to the month count register (MONTH) or the day count register (DAY) is not stored in the week count register (WEEK) automatically. After reset release, set the week count register as follow.

Day	WEEK
Sunday	00H
Monday	01H
Tuesday	02H
Wednesday	03H
Thursday	04H
Friday	05H
Saturday	06H

2. When it reads or writes from/to the register while the counter is in operation (RTCE = 1), follow the procedures described in the section 8.4.3 Reading/writing real-time clock.

8.3.10 Month count register (MONTH)

The MONTH register is an 8-bit register that takes a value of 1 to 12 (decimal) and indicates the count value of months.

It counts up when the day counter overflows.

When data is written to this register, it is written to a buffer and then to the counter up to two cycles of f_{RTC} later. Even if the day count register overflows while this register is being written, this register ignores the overflow and is set to the value written. Set a decimal value of 01 to 12 to this register in BCD code.

The MONTH register can be set by an 8-bit memory manipulation instruction.

Reset signal generation clears this register to 01H.

Figure 8-11. Format of Month Count Register (MONTH)

Address: FFF97H After reset: 01H R/W

Symbol	7	6	5	4	3	2	1	0
MONTH	0	0	0	MONTH10	MONTH8	MONTH4	MONTH2	MONTH1

Caution When it reads or writes from/to the register while the counter is in operation (RTCE = 1), follow the procedures described in the section 8.4.3 Reading/writing real-time clock.

8.3.11 Year count register (YEAR)

The YEAR register is an 8-bit register that takes a value of 0 to 99 (decimal) and indicates the count value of years.

It counts up when the month count register (MONTH) overflows.

Values 00, 04, 08, …, 92, and 96 indicate a leap year.

When data is written to this register, it is written to a buffer and then to the counter up to two cycles of f_{RTC} later. Even if the MONTH register overflows while this register is being written, this register ignores the overflow and is set to the value written. Set a decimal value of 00 to 99 to this register in BCD code.

The YEAR register can be set by an 8-bit memory manipulation instruction.

Reset signal generation clears this register to 00H.

Figure 8-12. Format of Year Count Register (YEAR)

Address: FFF98H After reset: 00H R/W

Symbol	7	6	5	4	3	2	1	0
YEAR	YEAR80	YEAR40	YEAR20	YEAR10	YEAR8	YEAR4	YEAR2	YEAR1

Caution When it reads or writes from/to the register while the counter is in operation (RTCE = 1), follow the procedures described in the section 8.4.3 Reading/writing real-time clock.

8.3.12 Watch error correction register (SUBCUD)

This register is used to correct the watch with high accuracy when it is slow or fast by changing the value that overflows from the internal counter (16-bit) to the second count register (SEC) (reference value: 7FFFH).

The SUBCUD register can be set by an 8-bit memory manipulation instruction.

Reset signal generation clears this register to 00H.

Figure 8-13. Format of Watch Error Correction Register (SUBCUD)

Address: FFF99H After reset: 00H R/W

Symbol	7	6	5	4	3	2	1	0
SUBCUD	DEV	F6	F5	F4	F3	F2	F1	F0

DEV	Setting of watch error correction timing
0	Corrects watch error when the second digits are at 00, 20, or 40 (every 20 seconds).
1	Corrects watch error only when the second digits are at 00 (every 60 seconds).
Writing to the SUBCUD register at the following timing is prohibited. ● When DEV = 0 is set: For a period of SEC = 00H, 20H, 40H ● When DEV = 1 is set: For a period of SEC = 00H	

F6	Setting of watch error correction value
0	Increases by {(F5, F4, F3, F2, F1, F0) – 1} × 2.
1	Decreases by {(/F5, /F4, /F3, /F2, /F1, /F0) + 1} × 2.
When (F6, F5, F4, F3, F2, F1, F0) = (*, 0, 0, 0, 0, 0, *), the watch error is not corrected. * is 0 or 1. /F5 to /F0 are the inverted values of the corresponding bits (000011 when 111100). Range of correction value: (when F6 = 0) 2, 4, 6, 8, … , 120, 122, 124 (when F6 = 1) –2, –4, –6, –8, … , –120, –122, –124	

The range of value that can be corrected by using the watch error correction register (SUBCUD) is shown below.

	DEV = 0 (correction every 20 seconds)	DEV = 1 (correction every 60 seconds)
Correctable range	–189.2 ppm to 189.2 ppm	–63.1 ppm to 63.1 ppm
Maximum excludes quantization error	±1.53 ppm	±0.51 ppm
Minimum resolution	±3.05 ppm	±1.02 ppm

Remark If a correctable range is –63.1 ppm or lower and 63.1 ppm or higher, set 0 to DEV.

8.3.13 Alarm minute register (ALARMWM)

This register is used to set minutes of alarm.

The ALARMWM register can be set by an 8-bit memory manipulation instruction.

Reset signal generation clears this register to 00H.

Caution Set a decimal value of 00 to 59 to this register in BCD code. If a value outside the range is set, the alarm is not detected.

Figure 8-14. Format of Alarm Minute Register (ALARMWM)

Address: FFF9AH After reset: 00H R/W

Symbol	7	6	5	4	3	2	1	0
ALARMWM	0	WM40	WM20	WM10	WM8	WM4	WM2	WM1

8.3.14 Alarm hour register (ALARMWH)

This register is used to set hours of alarm.

The ALARMWH register can be set by an 8-bit memory manipulation instruction.

Reset signal generation clears this register to 12H.

However, the value of this register is 00H if the AMPM bit (bit 3 of the RTCC0 register) is set to 1 after reset.

Caution Set a decimal value of 00 to 23, 01 to 12, or 21 to 32 to this register in BCD code. If a value outside the range is set, the alarm is not detected.

Figure 8-15. Format of Alarm Hour Register (ALARMWH)

Address: FFF9BH After reset: 12H R/W

Symbol	7	6	5	4	3	2	1	0
ALARMWH	0	0	WH20	WH10	WH8	WH4	WH2	WH1

Caution Bit 5 (WH20) of the ALARMWH register indicates AM(0)/PM(1) if AMPM = 0 (if the 12-hour system is selected).

8.3.15 Alarm week register (ALARMWW)

This register is used to set date of alarm.

The ALARMWW register can be set by an 8-bit memory manipulation instruction.

Reset signal generation clears this register to 00H.

Figure 8-16. Format of Alarm Week Register (ALARMWW)

Address: FFF9CH After reset: 00H R/W

Symbol	7	6	5	4	3	2	1	0
ALARMWW	0	WW6	WW5	WW4	WW3	WW2	WW1	WW0

Here is an example of setting the alarm.

Time of Alarm	Day							12-Hour Display				24-Hour Display			
	Sunday WW0	Monday WW1	Tuesday WW2	Wednesday WW3	Thursday WW4	Friday WW5	Saturday WW6	Hour 10	Hour 1	Minute 10	Minute 1	Hour 10	Hour 1	Minute 10	Minute 1
Every day, 0:00 a.m.	1	1	1	1	1	1	1	1	2	0	0	0	0	0	0
Every day, 1:30 a.m.	1	1	1	1	1	1	1	0	1	3	0	0	1	3	0
Every day, 11:59 a.m.	1	1	1	1	1	1	1	1	1	5	9	1	1	5	9
Monday through Friday, 0:00 p.m.	0	1	1	1	1	1	0	3	2	0	0	1	2	0	0
Sunday, 1:30 p.m.	1	0	0	0	0	0	0	2	1	3	0	1	3	3	0
Monday, Wednesday, Friday, 11:59 p.m.	0	1	0	1	0	1	0	3	1	5	9	2	3	5	9

8.3.16 Port mode register 3 (PM3)

The PM3 register can be set by a 1-bit or 8-bit manipulation instruction.

Reset signal generation sets this register to FFH.

When using the port 3 as the RTC1HZ pin for output of 1 Hz, set the PM30 bit to 0.

Figure 8-17. Format of Port Mode Register 3 (PM3)

Address: FFF23H After reset: FFH R/W

Symbol	7	6	5	4	3	2	1	0
PM3	1	1	1	1	1	1	PM31[Note]	PM30

Note These internal pins must be set to output mode after reset release by software by setting 0 to the port register and port mode register.

8.3.17 Port register 3 (P3)

The PM3 register can be set by a 1-bit or 8-bit manipulation instruction.

Reset signal generation sets this register to 00H.

When using the port 3 as 1-Hz output to the RTC1Hz pin, set the P30 bit to 0.

Figure 8-18. Format of Port Register 3 (P3)

Address: FFF03H After reset: 00H R/W

Symbol	7	6	5	4	3	2	1	0
P3	0	0	0	0	0	0	P31[Note]	P30

Note These internal pins must be set to output mode after reset release by software by setting 0 to the port register and port mode register.

8.4 Real-time Clock Operation

8.4.1 Starting operation of real-time clock

Figure 8-19. Procedure for Starting Operation of Real-time Clock

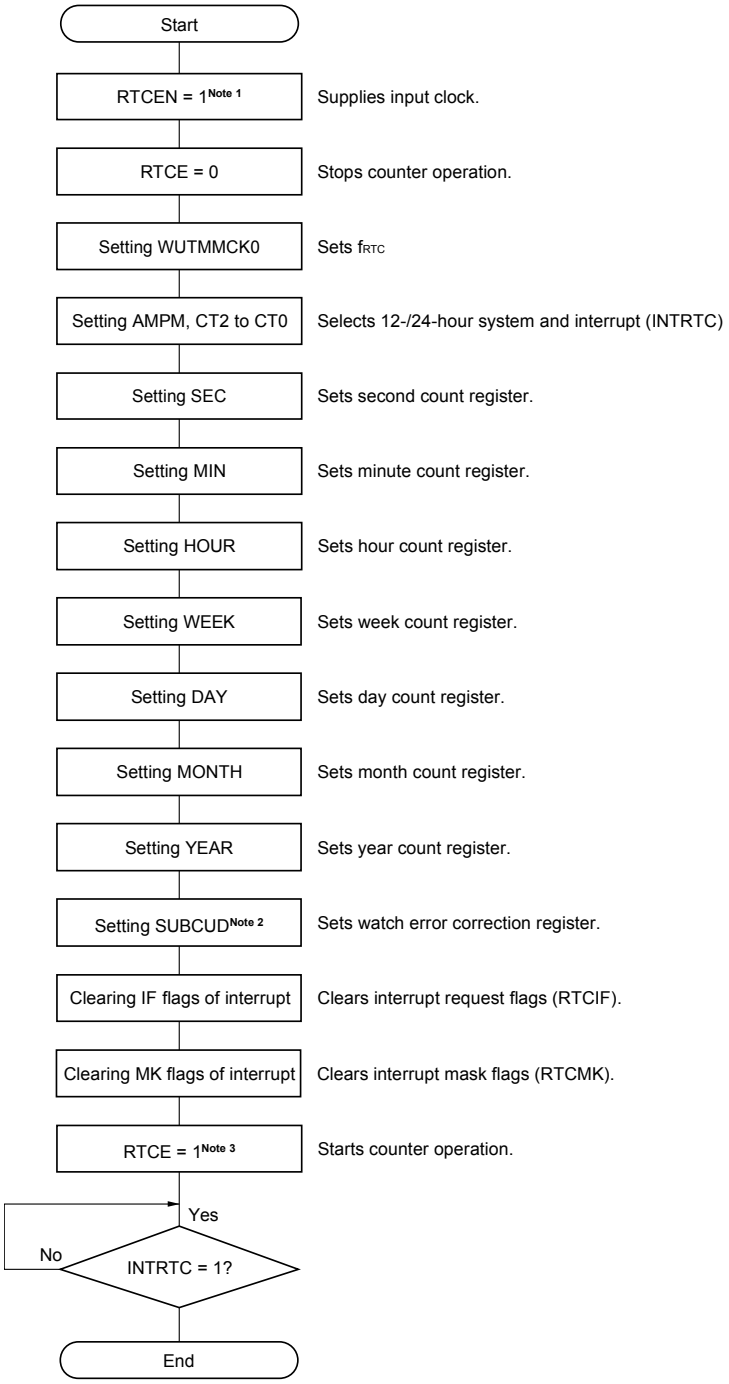

Notes 1. First set the RTCEN bit to 1, while oscillation of the count clock (f_{RTC}) is stable.

2. Set up the SUBCUD register only if the watch error must be corrected. For details about how to calculate the correction value, see **8.4.6 Example of watch error correction of real-time clock**.

3. Confirm the procedure described in **8.4.2 Shifting to HALT/STOP mode after starting operation** when shifting to HALT/STOP mode without waiting for INTRTC = 1 after RTCE = 1.

8.4.2 Shifting to HALT/STOP mode after starting operation

Perform one of the following processing when shifting to HALT/STOP mode immediately after setting the RTCE bit to 1.

However, after setting the RTCE bit to 1, this processing is not required when shifting to HALT/STOP mode after the INTRTC interrupt has occurred.

- Shifting to HALT/STOP mode when at least two cycles of the count clock (f_{RTC}) have elapsed after setting the RTCE bit to 1 (see **Figure 8-20**, **Example 1**).
- Checking by polling the RWST bit to become 1, after setting the RTCE bit to 1 and then setting the RWAIT bit to 1. Afterward, setting the RWAIT bit to 0 and shifting to HALT/STOP mode after checking again by polling that the RWST bit has become 0 (see **Figure 8-20**, **Example 2**).

Figure 8-20. Procedure for Shifting to HALT/STOP Mode After Setting RTCE Bit to 1

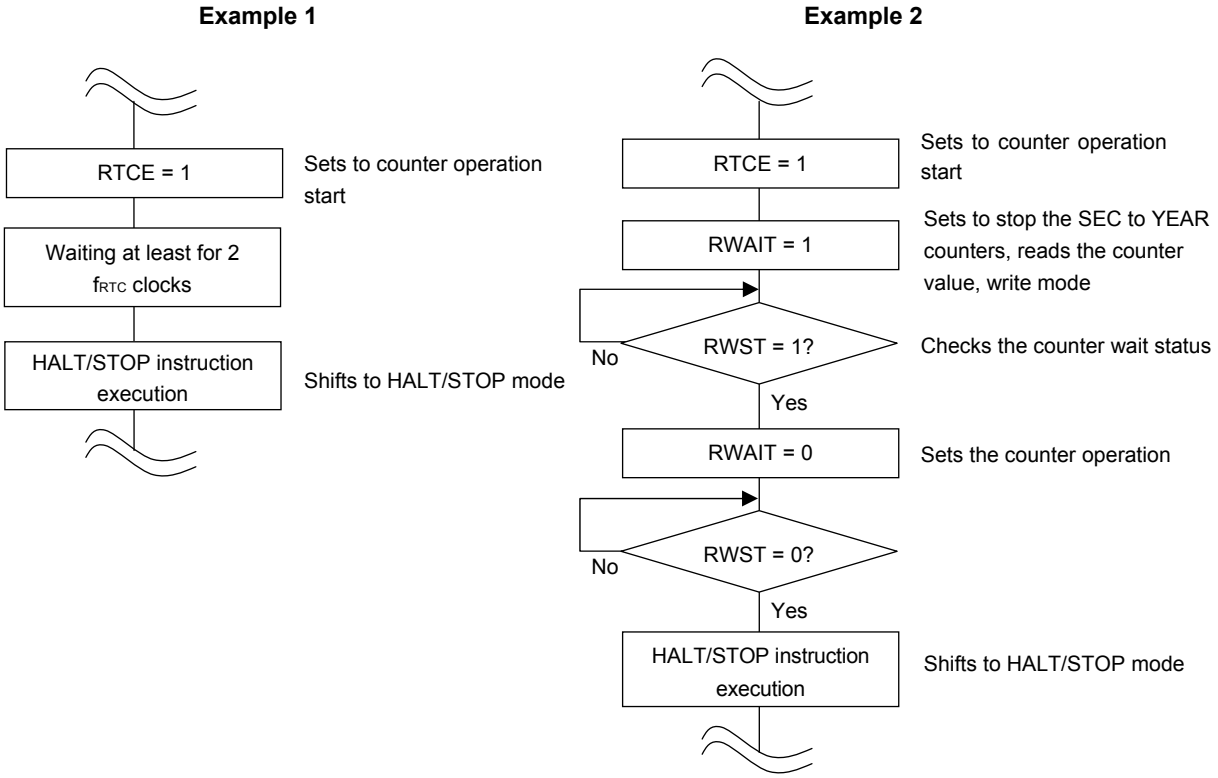

8.4.3 Reading/writing real-time clock

Read or write the counter after setting 1 to RWAIT first.

Set RWAIT to 0 after completion of reading or writing the counter.

Figure 8-21. Procedure for Reading Real-time Clock

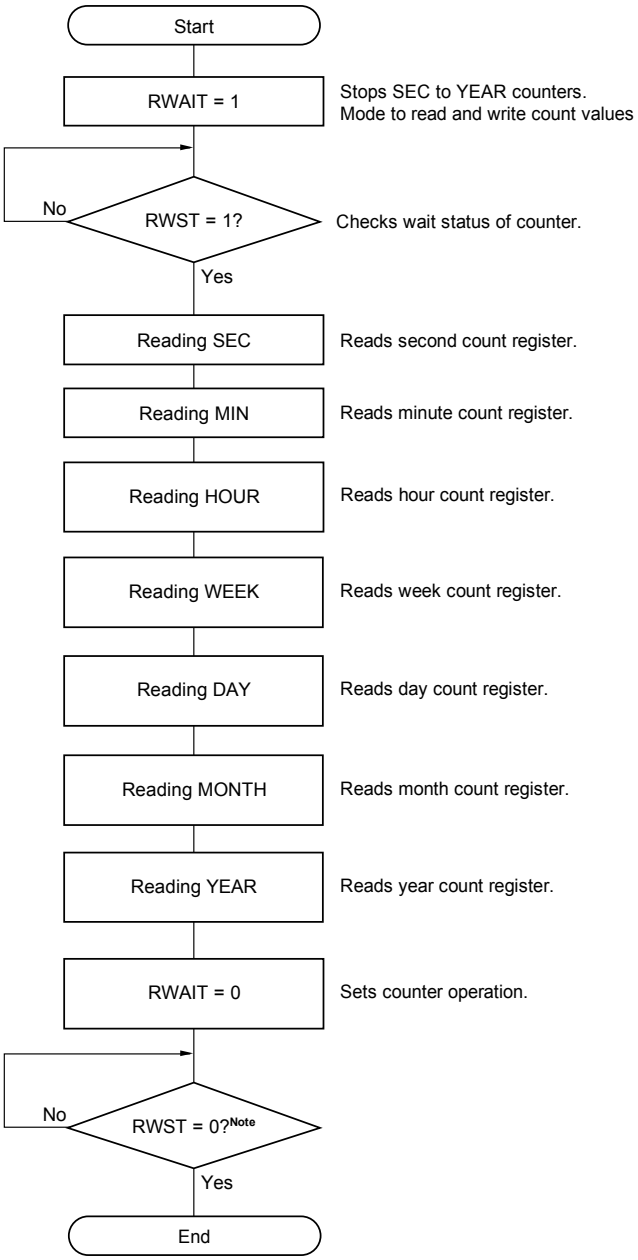

Note Be sure to confirm that RWST = 0 before setting STOP mode.

Caution **Complete the series of process of setting the RWAIT bit to 1 to clearing the RWAIT bit to 0 within 1 second.**

Remark The second count register (SEC), minute count register (MIN), hour count register (HOUR), week count register (WEEK), day count register (DAY), month count register (MONTH), and year count register (YEAR) may be read in any sequence.

All the registers do not have to read and only some registers may be read.

Figure 8-22. Procedure for Writing Real-time Clock

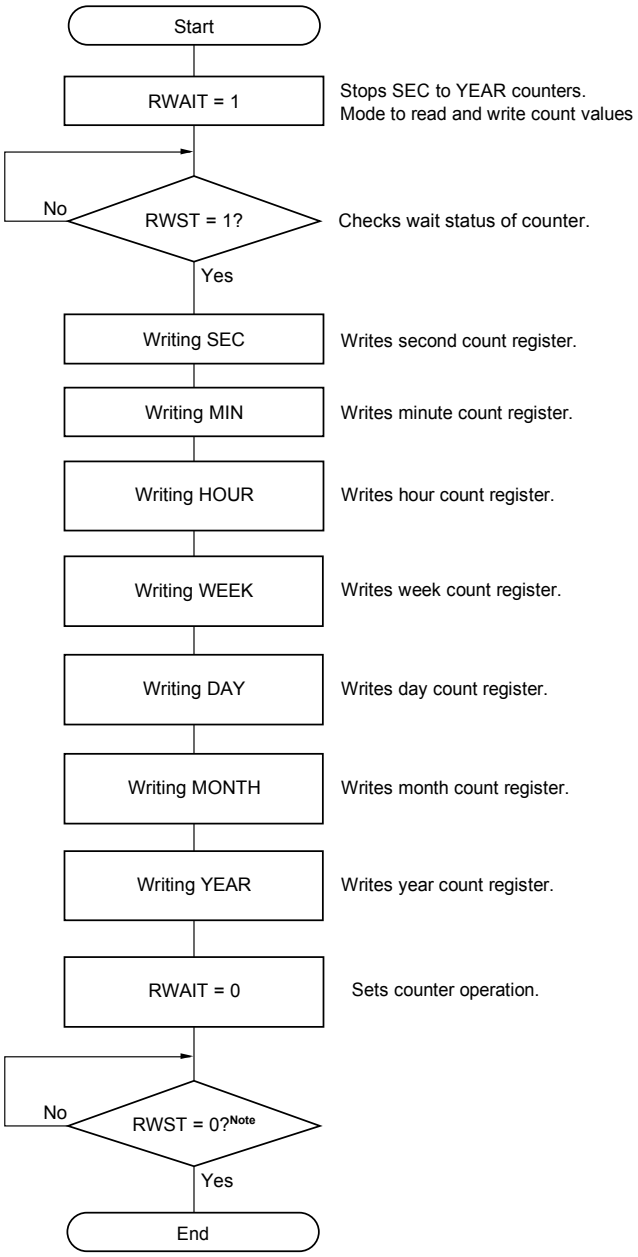

Note Be sure to confirm that RWST = 0 before setting STOP mode.

Cautions 1. Complete the series of operations of setting the RWAIT bit to 1 to clearing the RWAIT bit to 0 within 1 second.

2. When changing the values of the SEC, MIN, HOUR, WEEK, DAY, MONTH, and YEAR register while the counter operates (RTCE = 1), rewrite the values of the MIN register after disabling interrupt servicing INTRTC by using the interrupt mask flag register. Furthermore, clear the WAFG, RIFG and RTCIF flags after rewriting the MIN register.

Remark The second count register (SEC), minute count register (MIN), hour count register (HOUR), week count register (WEEK), day count register (DAY), month count register (MONTH), and year count register (YEAR) may be written in any sequence.

All the registers do not have to be set and only some registers may be written.

8.4.4 Setting alarm of real-time clock

Set time of alarm after setting 0 to WALE (alarm operation invalid.) first.

Figure 8-23. Alarm processing Procedure

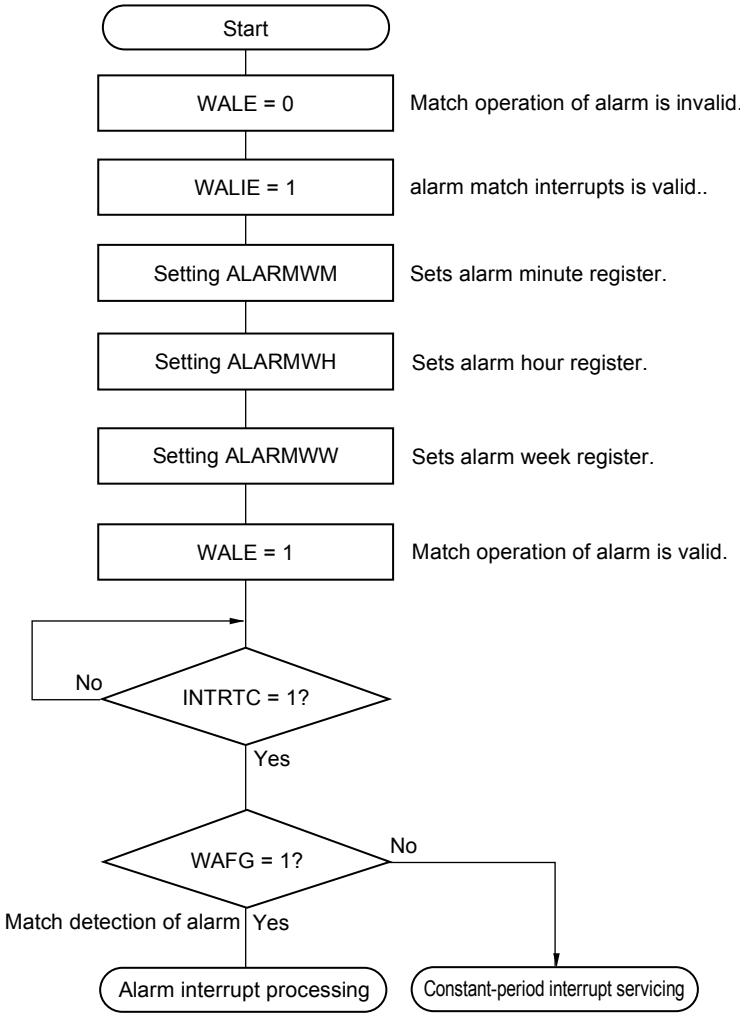

Remarks 1. The alarm week register (ALARMWW), alarm hour register (ALARMWH), and alarm week register (ALARMWW) may be written in any sequence.

2. Fixed-cycle interrupts and alarm match interrupts use the same interrupt source (INTRTC). When using these two types of interrupts at the same time, which interrupt occurred can be judged by checking the fixed-cycle interrupt status flag (RIFG) and the alarm detection status flag (WAFG) upon INTRTC occurrence.

8.4.5 1 Hz output of real-time clock

Figure 8-24. 1 Hz Output Setting Procedure

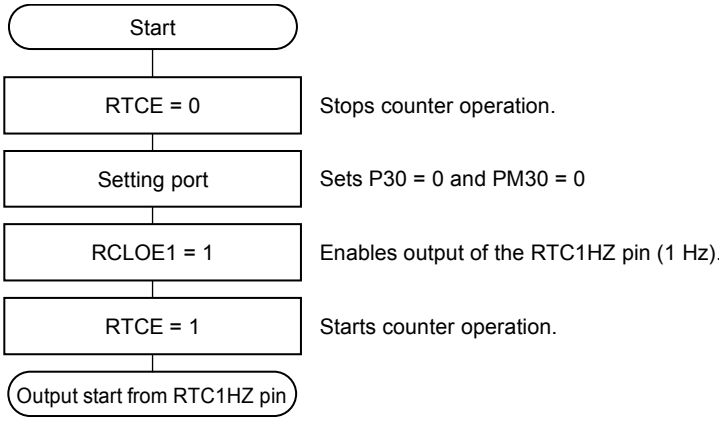

Caution First set the RTCEN bit to 1, while oscillation of the count clock (f_{SUB}) is stable.

8.4.6 Example of watch error correction of real-time clock

The watch can be corrected with high accuracy when it is slow or fast, by setting a value to the watch error correction register.

Example of calculating the correction value

The correction value used when correcting the count value of the internal counter (16-bit) is calculated by using the following expression.

Set the DEV bit to 0 when the correction range is –63.1 ppm or less, or 63.1 ppm or more.

(When DEV = 0)

Correction value[Note] = Number of correction counts in 1 minute ÷ 3 = (Oscillation frequency ÷ Target frequency – 1) × 32768 × 60 ÷ 3

(When DEV = 1)

Correction value[Note] = Number of correction counts in 1 minute = (Oscillation frequency ÷ Target frequency – 1) × 32768 × 60

Note The correction value is the watch error correction value calculated by using bits 6 to 0 of the watch error correction register (SUBCUD).

(When F6 = 0) Correction value = {(F5, F4, F3, F2, F1, F0) – 1} × 2

(When F6 = 1) Correction value = – {(/F5, /F4, /F3, /F2, /F1, /F0) + 1} × 2

When (F6, F5, F4, F3, F2, F1, F0) is (*, 0, 0, 0, 0, 0, *), watch error correction is not performed. "*" is 0 or 1. /F5 to /F0 are bit-inverted values (000011 when 111100).

Remarks 1. The correction value is 2, 4, 6, 8, … 120, 122, 124 or –2, –4, –6, –8, … –120, –122, –124.

2. The oscillation frequency is a value of the count clock (f_{RTC}).
It can be calculated from the output frequency of the RTC1HZ pin × 32768 when the watch error correction register is set to its initial value (00H).

3. The target frequency is the frequency resulting after correction performed by using the watch error correction register.

Correction example 1

Example of correcting from 32772.3 Hz to 32768 Hz (32772.3 Hz – 131.2 ppm)

[Measuring the oscillation frequency]

The oscillation frequency[Note] of each product is measured by outputting about 32.768 kHz from the PCLBUZ0 pin, or by outputting about 1 Hz from the RTC1HZ pin when the watch error correction register (SUBCUD) is set to its initial value (00H).

Note See **8.4.5 1 Hz output of real-time clock** for the setting procedure of the RTC1Hz output, and see **10.4 Operations of Clock Output/Buzzer Output Controller** for the setting procedure of outputting about 32 kHz from the PCLBUZ0 pin.

[Calculating the correction value]

(When the output frequency from the PCLBUZ0 pin is 32772.3 Hz)

Assume the target frequency to be 32768 Hz (32772.3 Hz–131.2 ppm) and DEV to be 0, because the correctable range of –131.2 ppm is –63.1 ppm or lower.

The expression for calculating the correction value when DEV is 0 is applied.

Correction value = Number of correction counts in 1 minute ÷ 3
= (Oscillation frequency ÷ target frequency – 1) × 32768 × 60 ÷ 3
= (32772.3 ÷ 32768 – 1) × 32768 × 60 ÷ 3
= 86

[Calculating the values to be set to (F6 to F0)]

(When the correction value is 86)

If the correction value is 0 or larger (when slowing), assume F6 to be 0.

Calculate (F5, F4, F3, F2, F1, F0) from the correction value.

{ (F5, F4, F3, F2, F1, F0) – 1} × 2 = 86
(F5, F4, F3, F2, F1, F0) = 44
(F5, F4, F3, F2, F1, F0) = (1, 0, 1, 1, 0, 0)

Consequently, when correcting from 32772.3 Hz to 32768 Hz (32772.3 Hz – 131.2 ppm), setting the correction register such that DEV is 0 and the correction value is 86 (bits 6 to 0 of the SUBCUD register: 0101100) results in 32768 Hz (0 ppm).

Figure 8-25 shows the operation when (DEV, F6, F5, F4, F3, F2, F1, F0) is (0, 0, 1, 0, 1, 1, 0, 0).

Figure 8-25. Correction Operation when (DEV, F6, F5, F4, F3, F2, F1, F0) = (0, 0, 1, 0, 1, 1, 0, 0)

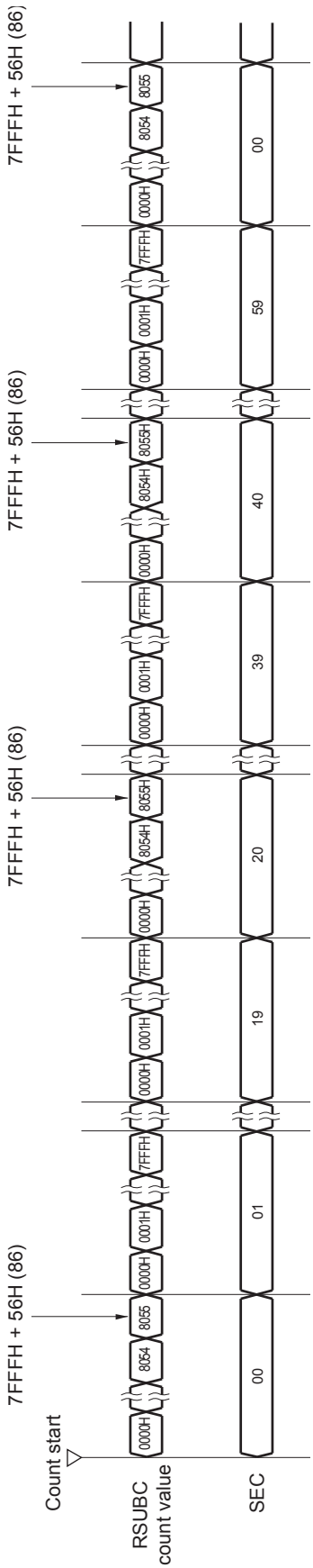

Correction example 2

Example of correcting from 32767.4 Hz to 32768 Hz (32767.4 Hz + 18.3 ppm)

[Measuring the oscillation frequency]

The oscillation frequency[Note] of each product is measured by outputting about 1 Hz from the RTC1HZ pin when the watch error correction register (SUBCUD) is set to its initial value (00H).

Note See **8.4.5 1 Hz output of real-time clock** for the setting procedure of outputting about 1 Hz from the RTC1HZ pin.

[Calculating the correction value]

(When the output frequency from the RTCCL pin is 0.9999817 Hz)

Oscillation frequency = 32768 × 0.9999817 ≈ 32767.4 Hz

Assume the target frequency to be 32768 Hz (32767.4 Hz + 18.3 ppm) and DEV to be 1.

The expression for calculating the correction value when DEV is 1 is applied.

Correction value = Number of correction counts in 1 minute
= (Oscillation frequency ÷ Target frequency – 1) × 32768 × 60
= (32767.4 ÷ 32768 – 1) × 32768 × 60
= –36

[Calculating the values to be set to (F6 to F0)]

(When the correction value is –36)

If the correction value is 0 or less (when quickening), assume F6 to be 1.

Calculate (F5, F4, F3, F2, F1, F0) from the correction value.

– {(/F5, /F4, /F3, /F2, /F1, /F0) – 1} × 2	= –36
(/F5, /F4, /F3, /F2, /F1, /F0)	= 17
(/F5, /F4, /F3, /F2, /F1, /F0)	= (0, 1, 0, 0, 0, 1)
(F5, F4, F3, F2, F1, F0)	= (1, 0, 1, 1, 1, 0)

Consequently, when correcting from 32767.4 Hz to 32768 Hz (32767.4 Hz + 18.3 ppm), setting the correction register such that DEV is 1 and the correction value is –36 (bits 6 to 0 of the SUBCUD register: 1101110) results in 32768 Hz (0 ppm).

Figure 8-26 shows the operation when (DEV, F6, F5, F4, F3, F2, F1, F0) is (1, 1, 1, 0, 1, 1, 1, 0).

Figure 8-26. Correction operation when (DEV, F6, F5, F4, F3, F2, F1, F0) = (1, 1, 1, 0, 1, 1, 1, 0)

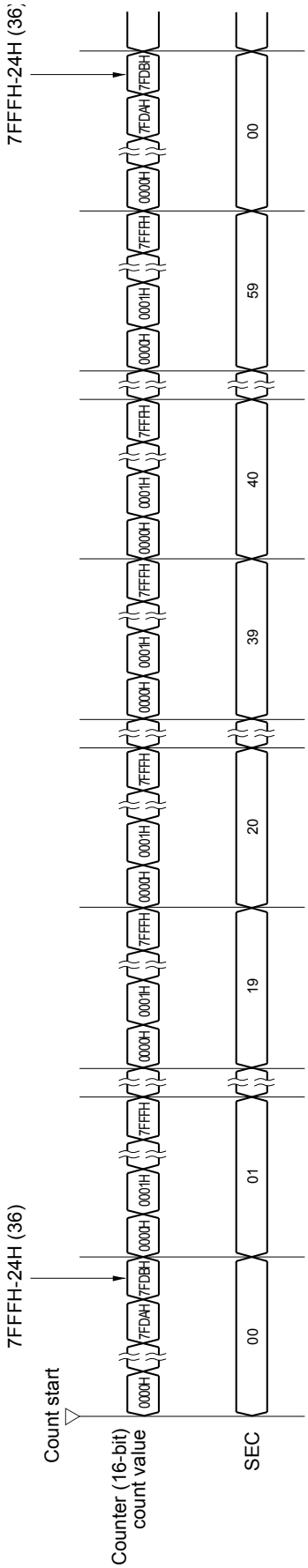

CHAPTER 9 12-BIT INTERVAL TIMER

9.1 Functions of 12-bit Interval Timer

An interrupt (INTIT) is generated at any previously specified time interval. It can be utilized for wakeup from STOP mode and triggering an A/D converter's SNOOZE mode.

9.2 Configuration of 12-bit Interval Timer

The 12-bit interval timer includes the following hardware.

Table 9-1. Configuration of 12-bit Interval Timer

Item	Configuration
Counter	12-bit counter
Control registers	Peripheral enable register 0 (PER0)
	Subsystem clock supply mode control register (OSMC)
	Interval timer control register (ITMC)

Figure 9-1. Block Diagram of 12-bit Interval Timer

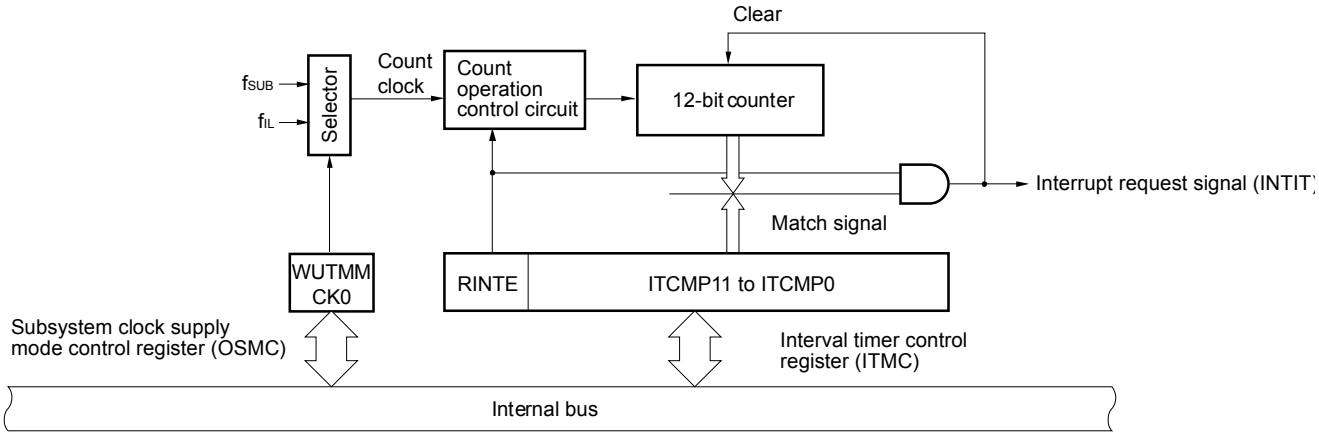

9.3 Registers Controlling 12-bit Interval Timer

The 12-bit interval timer is controlled by the following registers.

- Peripheral enable register 0 (PER0)
- Subsystem clock supply mode control register (OSMC)
- Interval timer control register (ITMC)

9.3.1 Peripheral enable register 0 (PER0)

This register is used to enable or disable supplying the clock to the peripheral hardware. Clock supply to a hardware macro that is not used is stopped in order to reduce the power consumption and noise.

When the 12-bit interval timer is used, be sure to set bit 7 (RTCEN) of this register to 1.

The PER0 register can be set by a 1-bit or 8-bit memory manipulation instruction.

Reset signal generation clears this register to 00H.

Figure 9-2. Format of Peripheral Enable Register 0 (PER0)

Address: F00F0H After reset: 00H R/W

Symbol	<7>	6	<5>	<4>	<3>	<2>	1	<0>
PER0	RTCEN	0	ADCEN	IICA0EN	SAU1EN	SAU0EN	0	TAU0EN

RTCEN	Control of real-time clock (RTC) and 12-bit interval timer input clock supply
0	Stops clock supply. ● SFR used by the real-time clock (RTC) and 12-bit interval timer cannot be written. ● The real-time clock (RTC) and 12-bit interval timer are in the reset status.
1	Enables clock supply. ● SFR used by the real-time clock (RTC) and 12-bit interval timer can be read and written.

Cautions 1. When using the 12-bit interval timer, be sure to first set the RTCEN bit to 1 and then set the interval timer control register (ITMC), while oscillation of the count clock is stable. If RTCEN = 0, writing to the registers controlling the 12-bit interval timer is ignored, and, even if the register is read, only the default value is read (except the subsystem clock supply mode control register (OSMC)).

2. Clock supply to peripheral functions other than the real-time clock and 12-bit interval timer can be stopped in STOP mode or HALT mode when the subsystem clock is used, by setting the RTCLPC bit of the subsystem clock supply mode control register (OSMC) to 1.

3. Be sure to clear the bits 1 and 6 to “0”.

9.3.2 Subsystem clock supply mode control register (OSMC)

The WUTMMCK0 bit can be used to select the 12-bit interval timer or real-time clock operation clock.

In addition, by stopping clock functions that are unnecessary, the RTCLPC bit can be used to reduce power consumption. For details about setting the RTCLPC bit, see **CHAPTER 6 CLOCK GENERATOR**.

The OSMC register can be set by an 8-bit memory manipulation instruction.

Reset signal generation clears this register to 00H.

Figure 9-3. Format of Subsystem Clock Supply Mode Control Register (OSMC)

Address: F00F3H After reset: 00H R/W

Symbol	7	6	5	4	3	2	1	0
OSMC	RTCLPC	0	0	WUTMMCK0	0	0	0	0

WUTMMCK0	Selection of operation clock for real-time clock and 12-bit interval timer.
0	Subsystem clock (f_{SUB})
1	Low-speed on-chip oscillator clock (f_{IL})

9.3.3 Interval timer control register (ITMC)

This register is used to set up the starting and stopping of the 12-bit interval timer operation and to specify the timer compare value.

The ITMC register can be set by a 16-bit memory manipulation instruction.

Reset signal generation clears this register to 0FFFH.

Figure 9-4. Format of Interval Timer Control Register (ITMC)

Address: FFF90H After reset: 0FFFH R/W

Symbol	15	14	13	12	11 to 0
ITMC	RINTE	0	0	0	ITMCMP11 to ITMCMP0

RINTE	12-bit Interval timer operation control
0	Count operation stopped (count clear)
1	Count operation started

ITMCMP11 to ITMCMP0	Specification of the 12-bit interval timer compare value
001H • • • FFFH	These bits generate an interrupt at the fixed cycle (count clock cycles x (ITMCMP setting + 1)).
000H	Setting prohibit
Example interrupt cycles when 001H or FFFH is specified for ITMCMP11 to ITMCMP0 • ITMCMP11 to ITMCMP0 = 001H, count clock: when f_{SUB} = 32.768 kHz 1/32.768 [kHz] × (1 + 1) = 0.06103515625 [ms] ≈ 61.03 [μs] • ITMCMP11 to ITMCMP0 = FFFH, count clock: when f_{SUB} = 32.768 kHz 1/32.768 [kHz] × (4095 + 1) = 125 [ms]	

Cautions 1. Before changing the RINTE bit from 1 to 0, use the interrupt mask flag register to disable the INTIT interrupt servicing. When the operation starts (from 0 to 1) again, clear the ITIF flag, and then enable the interrupt servicing.

2. The value read from the RINTE bit is applied one count clock cycle after setting the RINTE bit.

3. When setting the RINTE bit after returned from standby mode and entering standby mode again, confirm that the written value of the RINTE bit is reflected, or wait that more than one clock of the count clock has elapsed after returned from standby mode. Then enter standby mode.

4. Only change the setting of the ITMCMP11 to ITMCMP0 bits when RINTE = 0.
However, it is possible to change the settings of the ITMCMP11 to ITMCMP0 bits at the same time as when changing RINTE from 0 to 1 or 1 to 0.

9.4 12-bit Interval Timer Operation

9.4.1 12-bit interval timer operation timing

The count value specified for the ITMCMP11 to ITMCMP0 bits is used as an interval to operate an 12-bit interval timer that repeatedly generates interrupt requests (INTIT).

When the RINTE bit is set to 1, the 12-bit counter starts counting.

When the 12-bit counter value matches the value specified for the ITMCMP11 to ITMCMP0 bits, the 12-bit counter value is cleared to 0, counting continues, and an interrupt request signal (INTIT) is generated at the same time.

The basic operation of the 12-bit interval timer is as follows.

Figure 9-5. 12-bit Interval Timer Operation Timing (ITMCMP11 to ITMCMP0 = 0FFH, count clock: f_{SUB} = 32.768 kHz)

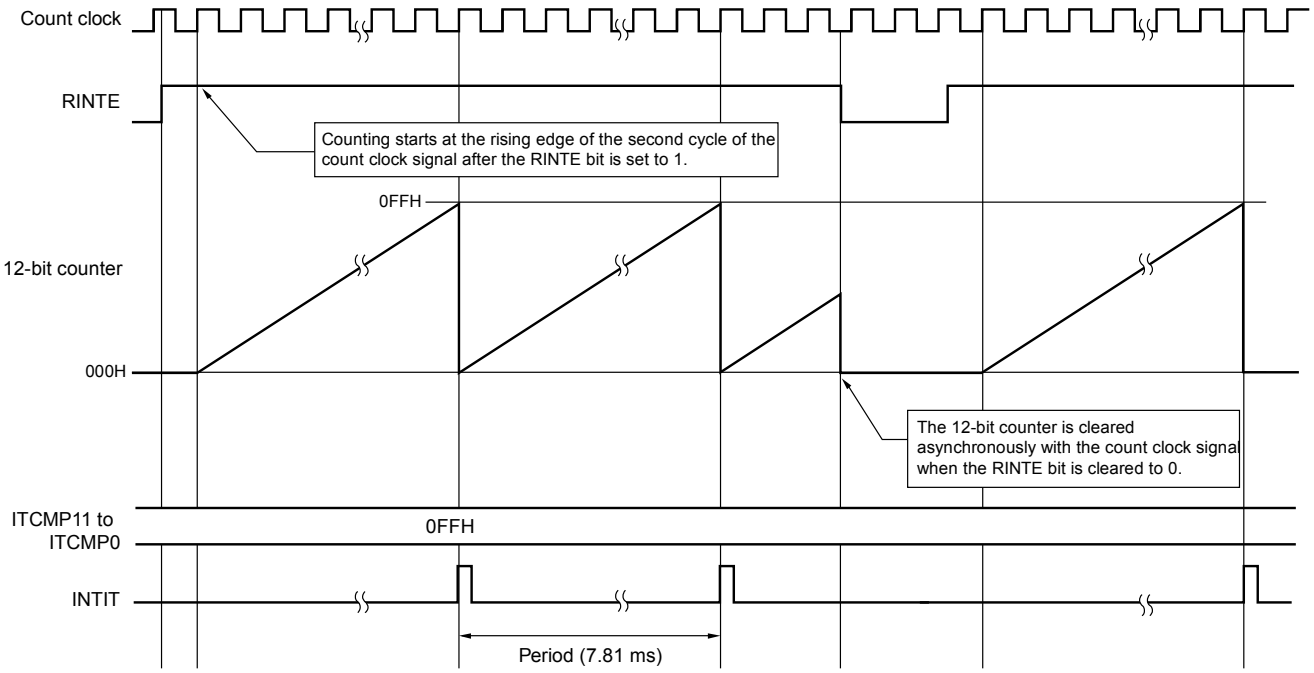

9.4.2 Start of count operation and re-enter to HALT/STOP mode after returned from HALT/STOP mode

When setting the RINTE bit after returned from HALT or STOP mode and entering HALT or STOP mode again, write 1 to the RINTE bit, and confirm the written value of the RINTE bit is reflected or wait for at least one cycle of the count clock. Then, enter HALT or STOP mode.

- After setting RINTE to 1, confirm by polling that the RINTE bit has become 1, and then enter HALT or STOP mode (see **Example 1** in **Figure 9-6**).
- After setting RINTE to 1, wait for at least one cycle of the count clock and then enter HALT or STOP mode (see **Example** 2 in **Figure 9-6**).

Figure 9-6. Procedure of entering to HALT or STOP mode after setting RINTE to 1

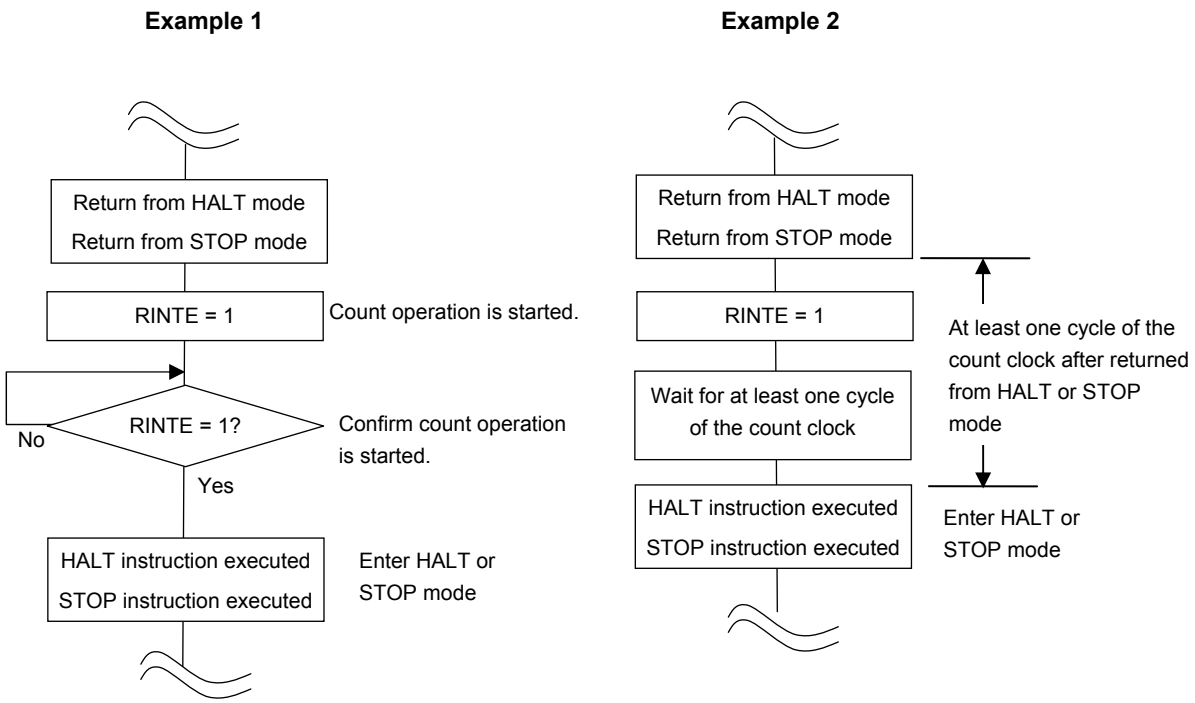

CHAPTER 10 CLOCK OUTPUT/BUZZER OUTPUT CONTROLLER

Output pins of the clock output and buzzer output controllers are PCLBUZ0.

10.1 Functions of Clock Output/Buzzer Output Controller

The clock output controller is intended for clock output for supply to peripheral ICs.
Buzzer output is a function to output a square wave of buzzer frequency.
One pin can be used to output a clock or buzzer sound.
Two output pins, PCLBUZ0 and PCLBUZ1, are available.
The PCLBUZn pin outputs a clock selected by clock output select register n (CKSn).
Figure 10-1 shows the block diagram of clock output/buzzer output controller.

Caution It is not possible to output the subsystem clock (f_{SUB}) from the PCLBUZn pin while the RTCLPC bit of the subsystem clock supply mode control register (OSMC), which controls the supply of the subsystem clock, is set to 1 and moreover while HALT mode is set with the subsystem clock (f_{SUB}) selected as CPU clock.

Remark n = 0

Figure 10-1. Block Diagram of Clock Output/Buzzer Output Controller

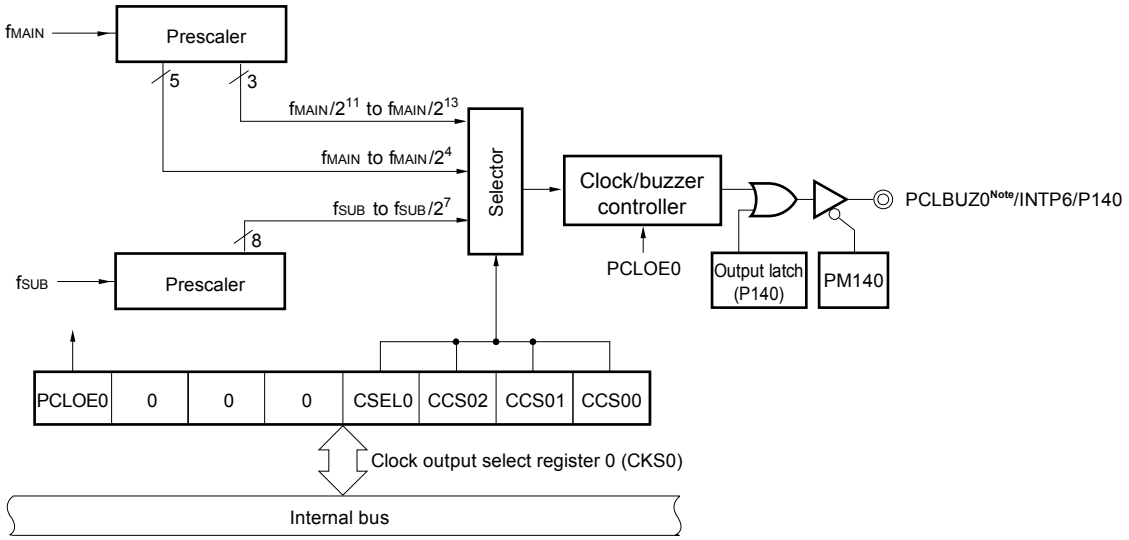

Note For output frequencies available from PCLBUZ0, see **30.6 AC Characteristics**.

10.2 Configuration of Clock Output/Buzzer Output Controller

The clock output/buzzer output controller includes the following hardware.

Table 10-1. Configuration of Clock Output/Buzzer Output Controller

Item	Configuration
Control registers	Clock output select registers n (CKSn) Port mode register 14 (PM14) Port register 14 (P14)

10.3 Registers Controlling Clock Output/Buzzer Output Controller

The following registers are used to control the clock output/buzzer output controller.

- Clock output select registers n (CKSn)
- Port mode register 14 (PM14)
- Port register 14 (P14)

10.3.1 Clock output select registers n (CKSn)

These registers set output enable/disable for clock output or for the buzzer frequency output pin (PCLBUZn), and set the output clock.

Select the clock to be output from the PCLBUZn pin by using the CKSn register.

The CKSn register are set by a 1-bit or 8-bit memory manipulation instruction.

Reset signal generation clears these registers to 00H.

Figure 10-2. Format of Clock Output Select Register n (CKSn)

Address: FFFA5H (CKS0) After reset: 00H R/W

Symbol	<7>	6	5	4	3	2	1	0
CKSn	PCLOEn	0	0	0	CSELn	CCSn2	CCSn1	CCSn0

PCLOEn	PCLBUZn pin output enable/disable specification
0	Output disable (default)
1	Output enable

CSELn	CCSn2	CCSn1	CCSn0	PCLBUZn pin output clock selection				
					f_{MAIN} = 5 MHz	f_{MAIN} = 10 MHz	f_{MAIN} = 20 MHz	f_{MAIN} = 32 MHz
0	0	0	0	f_{MAIN}	5 MHz	10 MHz Note	Setting prohibited Note	Setting prohibited Note
0	0	0	1	$f_{MAIN}/2$	2.5 MHz	5 MHz	10 MHz Note	16 MHz Note
0	0	1	0	$f_{MAIN}/2^2$	1.25 MHz	2.5 MHz	5 MHz	8 MHz Note
0	0	1	1	$f_{MAIN}/2^3$	625 kHz	1.25 MHz	2.5 MHz	4 MHz
0	1	0	0	$f_{MAIN}/2^4$	312.5 kHz	625 kHz	1.25 MHz	2 MHz
0	1	0	1	$f_{MAIN}/2^{11}$	2.44 kHz	4.88 kHz	9.76 kHz	15.63 kHz
0	1	1	0	$f_{MAIN}/2^{12}$	1.22 kHz	2.44 kHz	4.88 kHz	7.81 kHz
0	1	1	1	$f_{MAIN}/2^{13}$	610 Hz	1.22 kHz	2.44 kHz	3.91 kHz
1	0	0	0	f_{SUB}	32.768 kHz			
1	0	0	1	$f_{SUB}/2$	16.384 kHz			
1	0	1	0	$f_{SUB}/2^2$	8.192 kHz			
1	0	1	1	$f_{SUB}/2^3$	4.096 kHz			
1	1	0	0	$f_{SUB}/2^4$	2.048 kHz			
1	1	0	1	$f_{SUB}/2^5$	1.024 kHz			
1	1	1	0	$f_{SUB}/2^6$	512 Hz			
1	1	1	1	$f_{SUB}/2^7$	256 Hz			

Note Use the output clock within a range of 16 MHz. Furthermore, when using the output clock at 2.7 V ≤ V_{DD} < 3.6 V, can be use it within 8 MHz only. See **30.6 AC Characteristics** for details.

Cautions 1. Change the output clock after disabling clock output (PCLOEn = 0).

2. To shift to STOP mode when the main system clock is selected (CSELn = 0), set PCLOEn = 0 before executing the STOP instruction. When the subsystem clock is selected (CSELn = 1), PCLOEn = 1 can be set because the clock can be output while the RTCLPC bit of the subsystem clock supply mode control (OSMC) register (the bit which controls the supply of the subsystem clock) is set to 0 and moreover while STOP mode is set.

3. It is not possible to output the subsystem clock (f_{SUB}) from the PCLBUZn pin while the RTCLPC bit of the subsystem clock supply mode control register (OSMC), which controls the supply of the subsystem clock, is set to 1 and moreover while HALT mode is set with the subsystem clock (f_{SUB}) selected as CPU clock.

Remarks 1. n = 0

2. f_{MAIN}: Main system clock frequency

f_{SUB}: Subsystem clock frequency

10.3.2 Registers controlling port functions of pins to be used for clock or buzzer output

Using a port pin for clock or buzzer output requires setting of the registers that control the port functions multiplexed on the target pin (port mode register (PMxx), port register (Pxx)). For details, see **5.3.1 Port mode registers (PMxx)** and **5.3.2 Port registers (Pxx)**.

Specifically, using a port pin with a multiplexed clock or buzzer output function (e.g. P140/INTP6/PCLBUZ0) for clock or buzzer output, requires setting the corresponding bits in the port mode register (PMxx) and port register (Pxx) to 0.

Example When P140/INTP6/PCLBUZ0 is to be used for clock or buzzer output
Set the PM140 bit of port mode register 14 to “0”.
Set the P140 bit of port register 14 to “0”.

10.4 Operations of Clock Output/Buzzer Output Controller

One pin can be used to output a clock or buzzer sound.
The PCLBUZ0 pin outputs a clock/buzzer selected by the clock output select register 0 (CKS0).

10.4.1 Operation as output pin

The PCLBUZn pin is output as the following procedure.

<1> Set 0 in the bit of the port mode register (PMxx) and port register (Px) which correspond to the port which has a pin used as the PCLBUZ0 pin.
<2> Select the output frequency with bits 0 to 3 (CCSn0 to CCSn2, CSELn) of the clock output select register (CKSn) of the PCLBUZn pin (output in disabled status).
<3> Set bit 7 (PCLOEn) of the CKSn register to 1 to enable clock/buzzer output.

Remarks 1. The controller used for outputting the clock starts or stops outputting the clock one clock after enabling or disabling clock output (PCLOEn bit) is switched. At this time, pulses with a narrow width are not output. Figure 10-3 shows enabling or stopping output using the PCLOEn bit and the timing of outputting the clock.
2. n = 0

Figure 10-3. Timing of Outputting Clock from PCLBUZn Pin

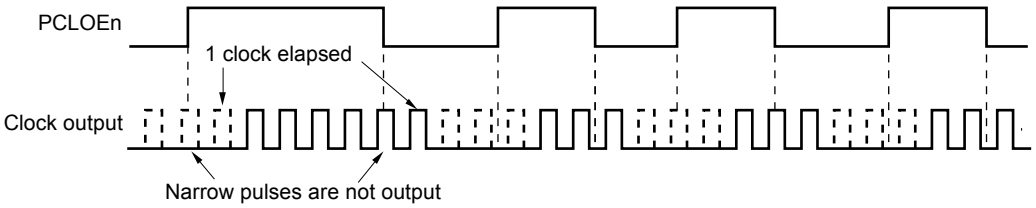

10.5 Cautions of Clock Output/Buzzer Output Controller

When the main system clock is selected for the PCLBUZn output (CSEL = 0), if STOP mode is entered within 1.5 clock cycles output from the PCLBUZn pin after the output is disabled (PCLOEn = 0), the PCLBUZn output width becomes shorter.

CHAPTER 11 WATCHDOG TIMER

11.1 Functions of Watchdog Timer

The counting operation of the watchdog timer is set by the option byte (000C0H).

The watchdog timer operates on the low-speed on-chip oscillator clock (f_{IL}).

The watchdog timer is used to detect an inadvertent program loop. If a program loop is detected, an internal reset signal is generated.

Program loop is detected in the following cases.

- If the watchdog timer counter overflows
- If a 1-bit manipulation instruction is executed on the watchdog timer enable register (WDTE)
- If data other than “ACH” is written to the WDTE register
- If data is written to the WDTE register during a window close period

When a reset occurs due to the watchdog timer, bit 4 (WDTRF) of the reset control flag register (RESF) is set to 1. For details of the RESF register, see **CHAPTER 20 RESET FUNCTION**.

When 75% + 1/2/f_{IL} of the overflow time is reached, an interval interrupt can be generated.

11.2 Configuration of Watchdog Timer

The watchdog timer includes the following hardware.

Table 11-1. Configuration of Watchdog Timer

Item	Configuration
Counter	Internal counter (17 bits)
Control register	Watchdog timer enable register (WDTE)

How the counter operation is controlled, overflow time, window open period, and interval interrupt are set by the option byte.

Table 11-2. Setting of Option Bytes and Watchdog Timer

Setting of Watchdog Timer	Option Byte (000C0H)
Watchdog timer interval interrupt	Bit 7 (WDTINT)
Window open period	Bits 6 and 5 (WINDOW1, WINDOW0)
Controlling counter operation of watchdog timer	Bit 4 (WDTON)
Overflow time of watchdog timer	Bits 3 to 1 (WDCS2 to WDCS0)
Controlling counter operation of watchdog timer (in HALT/STOP mode)	Bit 0 (WDSTBYON)

Remark For the option byte, see **CHAPTER 25 OPTION BYTE**.

Figure 11-1. Block Diagram of Watchdog Timer

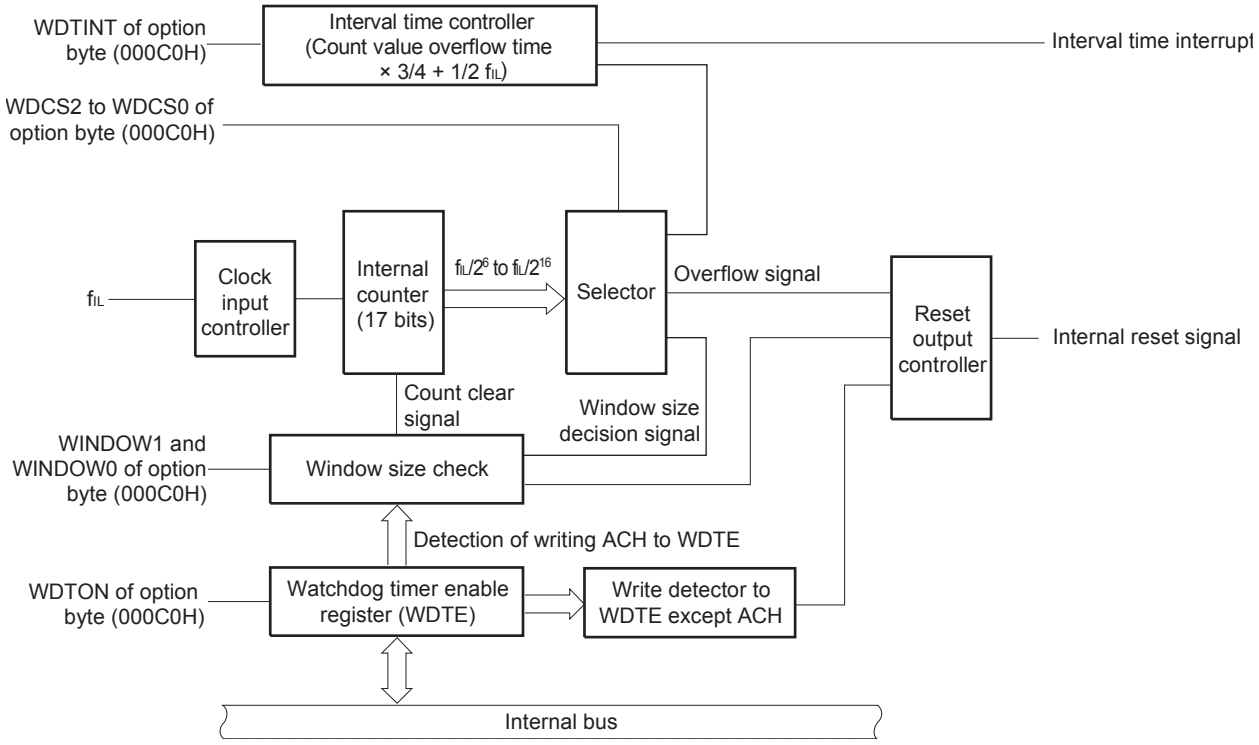

Remark f_{IL}: Low-speed on-chip oscillator clock

11.3 Register Controlling Watchdog Timer

The watchdog timer is controlled by the watchdog timer enable register (WDTE).

11.3.1 Watchdog timer enable register (WDTE)

Writing “ACH” to the WDTE register clears the watchdog timer counter and starts counting again.
This register can be set by an 8-bit memory manipulation instruction.
Reset signal generation sets this register to 9AH or 1AH[Note].

Figure 11-2. Format of Watchdog Timer Enable Register (WDTE)

Address: FFFABH After reset: 9AH/1AH[Note] R/W

Symbol	7	6	5	4	3	2	1	0
WDTE								

Note The WDTE register reset value differs depending on the WDTON bit setting value of the option byte (000C0H). To operate watchdog timer, set the WDTON bit to 1.

WDTON Bit Setting Value	WDTE Register Reset Value
0 (watchdog timer count operation disabled)	1AH
1 (watchdog timer count operation enabled)	9AH

Cautions 1. If a value other than “ACH” is written to the WDTE register, an internal reset signal is generated.
2. If a 1-bit memory manipulation instruction is executed for the WDTE register, an internal reset signal is generated.
3. The value read from the WDTE register is 9AH/1AH (this differs from the written value (ACH)).

11.4 Operation of Watchdog Timer

11.4.1 Controlling operation of watchdog timer

(1) When the watchdog timer is used, its operation is specified by the option byte (000C0H).

- Enable counting operation of the watchdog timer by setting bit 4 (WDTON) of the option byte (000C0H) to 1 (the counter starts operating after a reset release) (for details, see **CHAPTER 25**).

WDTON	Watchdog Timer Counter
0	Counter operation disabled (counting stopped after reset)
1	Counter operation enabled (counting started after reset)

- Set an overflow time by using bits 3 to 1 (WDCS2 to WDCS0) of the option byte (000C0H) (for details, see **11.4.2** and **CHAPTER 25**).
- Set a window open period by using bits 6 and 5 (WINDOW1 and WINDOW0) of the option byte (000C0H) (for details, see **11.4.3** and **CHAPTER 25**).

(2) After a reset release, the watchdog timer starts counting.
(3) By writing “ACH” to the watchdog timer enable register (WDTE) after the watchdog timer starts counting and before the overflow time set by the option byte, the watchdog timer is cleared and starts counting again.
(4) After that, write the WDTE register the second time or later after a reset release during the window open period. If the WDTE register is written during a window close period, an internal reset signal is generated.
(5) If the overflow time expires without “ACH” written to the WDTE register, an internal reset signal is generated.
An internal reset signal is generated in the following cases.

- If a 1-bit manipulation instruction is executed on the WDTE register
- If data other than “ACH” is written to the WDTE register

Cautions 1. When data is written to the watchdog timer enable register (WDTE) for the first time after reset release, the watchdog timer is cleared in any timing regardless of the window open time, as long as the register is written before the overflow time, and the watchdog timer starts counting again.
2. After "ACH" is written to the WDTE register, an error of up to 2 clocks (f_{IL}) may occur before the watchdog timer is cleared.
3. The watchdog timer can be cleared immediately before the count value overflows.

Cautions 4. The operation of the watchdog timer in the HALT, STOP, and SNOOZE modes differs as follows depending on the set value of bit 0 (WDSTBYON) of the option byte (000C0H).

	WDSTBYON = 0	WDSTBYON = 1
In HALT mode	Watchdog timer operation stops.	Watchdog timer operation continues.
In STOP mode		
In SNOOZE mode		

If WDSTBYON = 0, the watchdog timer resumes counting after the HALT or STOP mode is released. At this time, the counter is cleared to 0 and counting starts.
When operating with the X1 oscillation clock after releasing the STOP mode, the CPU starts operating after the oscillation stabilization time has elapsed.
Therefore, if the period between the STOP mode release and the watchdog timer overflow is short, an overflow occurs during the oscillation stabilization time, causing a reset.
Consequently, set the overflow time in consideration of the oscillation stabilization time when operating with the X1 oscillation clock and when the watchdog timer is to be cleared after the STOP mode release by an interval interrupt.

11.4.2 Setting overflow time of watchdog timer

Set the overflow time of the watchdog timer by using bits 3 to 1 (WDCS2 to WDCS0) of the option byte (000C0H).

If an overflow occurs, an internal reset signal is generated. The present count is cleared and the watchdog timer starts counting again by writing “ACH” to the watchdog timer enable register (WDTE) during the window open period before the overflow time.

The following overflow times can be set.

Table 11-3. Setting of Overflow Time of Watchdog Timer

WDCS2	WDCS1	WDCS0	Overflow Time of Watchdog Timer (f_{IL} = 17.25 kHz (MAX.))
0	0	0	$2^6/f_{IL}$ (3.71 ms)
0	0	1	$2^7/f_{IL}$ (7.42 ms)
0	1	0	$2^8/f_{IL}$ (14.84 ms)
0	1	1	$2^9/f_{IL}$ (29.68 ms)
1	0	0	$2^{11}/f_{IL}$ (118.72 ms)
1	0	1	$2^{13}/f_{IL}$ (474.89 ms)
1	1	0	$2^{14}/f_{IL}$ (949.79 ms)
1	1	1	$2^{16}/f_{IL}$ (3799.18 ms)

Remark f_{IL}: Low-speed on-chip oscillator clock frequency

11.4.3 Setting window open period of watchdog timer

Set the window open period of the watchdog timer by using bits 6 and 5 (WINDOW1, WINDOW0) of the option byte (000C0H). The outline of the window is as follows.

- If “ACH” is written to the watchdog timer enable register (WDTE) during the window open period, the watchdog timer is cleared and starts counting again.
- Even if “ACH” is written to the WDTE register during the window close period, an abnormality is detected and an internal reset signal is generated.

Example If the window open period is 50%

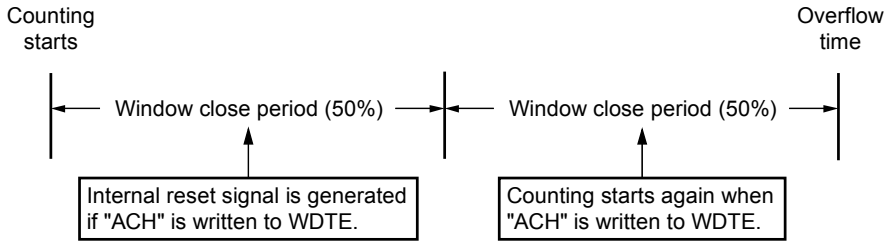

Caution When data is written to the WDTE register for the first time after reset release, the watchdog timer is cleared in any timing regardless of the window open time, as long as the register is written before the overflow time, and the watchdog timer starts counting again.

The window open period can be set is as follows.

Table 11-4. Setting Window Open Period of Watchdog Timer

WINDOW1	WINDOW0	Window Open Period of Watchdog Timer
0	0	Setting prohibited
0	1	50%
1	0	75% Note
1	1	100%

<R> **Note** When the window open period is set to 75%, clearing the counter of the watchdog timer (writing ACH to WDTE) must proceed outside the corresponding period from among those listed below, over which clearing of the counter is prohibited (for example, confirming that the interval timer interrupt request flag (WDTIIF) of the watchdog timer is set).

WDCS2	WDCS1	WDCS0	Watchdog timer overflow time (f_{IL} = 17.25 kHz (MAX.))	Period over which clearing the counter is prohibited when the window open period is set to 75%
0	0	0	$2^6/f_{IL}$ (3.71 ms)	1.85 ms to 2.51 ms
0	0	1	$2^7/f_{IL}$ (7.42 ms)	3.71 ms to 5.02 ms
0	1	0	$2^8/f_{IL}$ (14.84 ms)	7.42 ms to 10.04 ms
0	1	1	$2^9/f_{IL}$ (29.68 ms)	14.84 ms to 20.08 ms
1	0	0	$2^{11}/f_{IL}$ (118.72 ms)	56.36 ms to 80.32 ms
1	0	1	$2^{13}/f_{IL}$ (474.89 ms)	237.44 ms to 321.26 ms
1	1	0	$2^{14}/f_{IL}$ (949.79 ms)	474.89 ms to 642.51 ms
1	1	1	$2^{16}/f_{IL}$ (3799.18 ms)	1899.59 ms to 2570.04 ms

Caution When bit 0 (WDSTBYON) of the option byte (000C0H) = 0, the window open period is 100% regardless of the values of the WINDOW1 and WINDOW0 bits.

Remark If the overflow time is set to $2^9/f_{IL}$, the window close time and open time are as follows.

	Setting of Window Open Period		
	50%	75%	100%
Window close time	0 to 20.08 ms	0 to 10.04 ms	None
Window open time	20.08 to 29.68 ms	10.04 to 29.68 ms	0 to 29.68 ms

<When window open period is 50%>

- Overflow time:
  $2^9/f_{IL}$ (MAX.) = 2^9/17.25 kHz = 29.68 ms
- Window close time:
  0 to $2^9/f_{IL}$ (MIN.) × (1 – 0.5) = 0 to 2^9/12.75 kHz × 0.5 = 0 to 20.08 ms
- Window open time:
  $2^9/f_{IL}$ (MIN.) × (1 – 0.5) to $2^9/f_{IL}$ (MAX.) = 2^9/12.75 kHz × 0.5 to 2^9/17.25 kHz = 20.08 to 29.68 ms

11.4.4 Setting watchdog timer interval interrupt

Depending on the setting of bit 7 (WDTINT) of an option byte (000C0H), an interval interrupt (INTWDTI) can be generated when 75% + 1/2f_{IL} of the overflow time is reached.

Table 11-5. Setting of Watchdog Timer Interval Interrupt

WDTINT	Use of Watchdog Timer Interval Interrupt
0	Interval interrupt is not used.
1	Interval interrupt is generated when 75% + 1/2f_{IL} of overflow time is reached.

Caution When operating with the X1 oscillation clock after releasing the STOP mode, the CPU starts operating after the oscillation stabilization time has elapsed.
Therefore, if the period between the STOP mode release and the watchdog timer overflow is short, an overflow occurs during the oscillation stabilization time, causing a reset.
Consequently, set the overflow time in consideration of the oscillation stabilization time when operating with the X1 oscillation clock and when the watchdog timer is to be cleared after the STOP mode release by an interval interrupt.

Remark The watchdog timer continues counting even after INTWDTI is generated (until ACH is written to the watchdog timer enable register (WDTE)). If ACH is not written to the WDTE register before the overflow time, an internal reset signal is generated.

CHAPTER 12 A/D CONVERTER

12.1 Function of A/D Converter

The A/D converter is used to convert analog input signals into digital values, and is configured to control analog inputs, including 8 channels of A/D converter analog inputs (ANI0 to ANI3 and ANI16 to ANI19). 10-bit or 8-bit resolution can be selected by the ADTYP bit of the A/D converter mode register 2 (ADM2).

The A/D converter has the following function.

- **10-bit/8-bit resolution A/D conversion**

  10-bit resolution A/D conversion is carried out repeatedly for one analog input channel selected from ANI0 to ANI3 and ANI16 to ANI19. Each time an A/D conversion operation ends, an interrupt request (INTAD) is generated when in the select mode.

Various A/D conversion modes can be specified by using the mode combinations below.

Trigger mode	Software trigger	Conversion is started by software.
	Hardware trigger no-wait mode	Conversion is started by detecting a hardware trigger.
	Hardware trigger wait mode	The power is turned on by detecting a hardware trigger while the system is off and in the conversion standby state, and conversion is then started automatically after the stabilization wait time passes. When using the SNOOZE mode function, specify the hardware trigger wait mode.
Channel selection mode	Select mode	A/D conversion is performed on the analog input of one selected channel.
	Scan mode	4 channels of analog input ANI0 to ANI3 are A/D converted in turn.
Conversion operation mode	One-shot conversion mode	A/D conversion is performed on the selected channel once.
	Sequential conversion mode	A/D conversion is sequentially performed on the selected channels until it is stopped by software.
Operation voltage mode	Standard 1 or standard 2 mode	Conversion is done in the operation voltage range of 2.7 V ≤ V_{DD} ≤ 3.6 V.
	Low voltage 1 or low voltage 2 mode	Conversion is done in the operation voltage range of 1.6 V ≤ V_{DD} ≤ 3.6 V. Select this mode for conversion at a low voltage. Because the operation voltage is low, it is internally boosted during conversion.
Sampling time selection	Sampling clock cycles: 7 f_{AD}	The sampling time in standard 1 or low voltage 1 mode is seven cycles of the conversion clock (f_{AD}). Select this mode when the output impedance of the analog input source is high and the sampling time should be long.
	Sampling clock cycles: 5 f_{AD}	The sampling time in standard 2 or low voltage 2 mode is five cycles of the conversion clock (f_{AD}). Select this mode when enough sampling time is ensured (for example, when the output impedance of the analog input source is low).

Figure 12-1. Block Diagram of A/D Converter

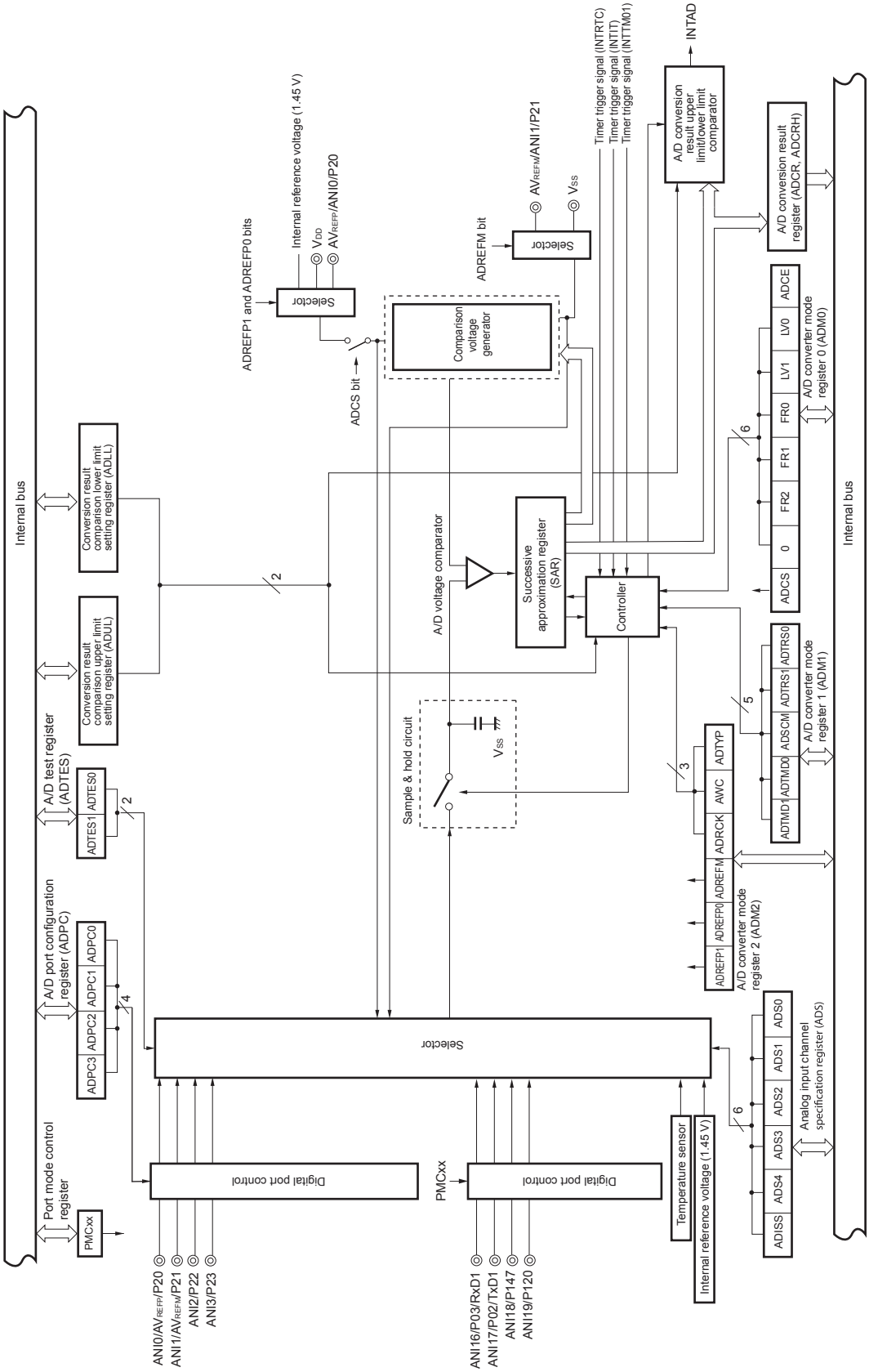

12.2 Configuration of A/D Converter

The A/D converter includes the following hardware.

(1) ANI0 to ANI3 and ANI16 to ANI19 pins

These are the analog input pins of the 8 channels of the A/D converter. They input analog signals to be converted into digital signals. Pins other than the one selected as the analog input pin can be used as I/O port pins.

(2) Sample & hold circuit

The sample & hold circuit samples each of the analog input voltages sequentially sent from the input circuit, and sends them to the A/D voltage comparator. This circuit also holds the sampled analog input voltage during A/D conversion.

(3) A/D voltage comparator

This A/D voltage comparator compares the voltage generated from the voltage tap of the comparison voltage generator with the analog input voltage. If the analog input voltage is found to be greater than the reference voltage (1/2 AV_{REF}) as a result of the comparison, the most significant bit (MSB) of the successive approximation register (SAR) is set. If the analog input voltage is less than the reference voltage (1/2 AV_{REF}), the MSB bit of the SAR is reset.

After that, bit 8 of the SAR register is automatically set, and the next comparison is made. The voltage tap of the comparison voltage generator is selected by the value of bit 9, to which the result has been already set.

Bit 9 = 0: (1/4 AV_{REF})
Bit 9 = 1: (3/4 AV_{REF})

The voltage tap of the comparison voltage generator and the analog input voltage are compared and bit 8 of the SAR register is manipulated according to the result of the comparison.

Analog input voltage ≥ Voltage tap of comparison voltage generator: Bit 8 = 1
Analog input voltage ≤ Voltage tap of comparison voltage generator: Bit 8 = 0

Comparison is continued like this to bit 0 of the SAR register.

When performing A/D conversion at a resolution of 8 bits, the comparison continues until bit 2 of the SAR register.

Remark AV_{REF}: The + side reference voltage of the A/D converter. This can be selected from AV_{REFP}, the internal reference voltage (1.45 V), and V_{DD}.

(4) Comparison voltage generator

The comparison voltage generator generates the comparison voltage input from an analog input pin.

(5) Successive approximation register (SAR)

The SAR register is a register that sets voltage tap data whose values from the comparison voltage generator match the voltage values of the analog input pins, 1 bit at a time starting from the most significant bit (MSB).

If data is set in the SAR register all the way to the least significant bit (LSB) (end of A/D conversion), the contents of the SAR register (conversion results) are held in the A/D conversion result register (ADCR). When all the specified A/D conversion operations have ended, an A/D conversion end interrupt request signal (INTAD) is generated.

(6) 10-bit A/D conversion result register (ADCR)

The A/D conversion result is loaded from the successive approximation register to this register each time A/D conversion is completed, and the ADCR register holds the A/D conversion result in its higher 10 bits (the lower 6 bits are fixed to 0).

(7) 8-bit A/D conversion result register (ADCRH)

The A/D conversion result is loaded from the successive approximation register to this register each time A/D conversion is completed, and the ADCRH register stores the higher 8 bits of the A/D conversion result.

(8) Controller

This circuit controls the conversion time of an input analog signal that is to be converted into a digital signal, as well as starting and stopping of the conversion operation. When A/D conversion has been completed, this controller generates INTAD through the A/D conversion result upper limit/lower limit comparator.

(9) AV_{REFP} pin

This pin inputs an external reference voltage (AV_{REFP}).

If using AV_{REFP} as the + side reference voltage of the A/D converter, set the ADREFP1 and ADREFP0 bits of A/D converter mode register 2 (ADM2) to 0 and 1, respectively.

The analog signals input to ANI16 to ANI19 are converted to digital signals based on the voltage applied between AV_{REFP} and the – side reference voltage (AV_{REFM}/V_{SS}).

In addition to AV_{REFP}, it is possible to select V_{DD} or the internal reference voltage (1.45 V) as the + side reference voltage of the A/D converter.

(10) AV_{REFM} pin

This pin inputs an external reference voltage (AV_{REFM}). If using AV_{REFM} as the – side reference voltage of the A/D converter, set the ADREFM bit of the ADM2 register to 1.

In addition to AV_{REFM}, it is possible to select V_{SS} as the – side reference voltage of the A/D converter.

12.3 Registers Controlling A/D Converter

The A/D converter is controlled by the following registers.

- Peripheral enable register 0 (PER0)
- A/D converter mode register 0 (ADM0)
- A/D converter mode register 1 (ADM1)
- A/D converter mode register 2 (ADM2)
- 10-bit A/D conversion result register (ADCR)
- 8-bit A/D conversion result register (ADCRH)
- Analog input channel specification register (ADS)
- Conversion result comparison upper limit setting register (ADUL)
- Conversion result comparison lower limit setting register (ADLL)
- A/D test register (ADTES)
- A/D port configuration register (ADPC)
- Port mode control registers 0 (PMC0)
- Port mode registers 0, 2, 12, and 14 (PM0, PM2, PM12, PM14)

12.3.1 Peripheral enable register 0 (PER0)

This register is used to enable or disable supplying the clock to the peripheral hardware. Clock supply to a hardware macro that is not used is stopped in order to reduce the power consumption and noise.

When the A/D converter is used, be sure to set bit 5 (ADCEN) of this register to 1.

The PER0 register can be set by a 1-bit or 8-bit memory manipulation instruction.

Reset signal generation clears this register to 00H.

Figure 12-2. Format of Peripheral Enable Register 0 (PER0)

Address: F00F0H After reset: 00H R/W

Symbol	<7>	6	<5>	<4>	<3>	<2>	1	<0>
PER0	RTCEN	0	ADCEN	IICA0EN	SAU1EN	SAU0EN	0	TAU0EN

ADCEN	Control of A/D converter input clock supply
0	Stops input clock supply. ● SFR used by the A/D converter cannot be written. ● The A/D converter is in the reset status.
1	Enables input clock supply. ● SFR used by the A/D converter can be read/written.

Cautions 1. When setting the A/D converter, be sure to set the following registers first while the ADCEN bit is set to 1. If ADCEN = 0, the values of the A/D converter control registers are cleared to their initial values and writing to them is ignored (except for port mode registers 0, 2, 12, and 14 (PM0, PM2, PM12, and PM14), port mode control register 0 (PMC0), and A/D port configuration register (ADPC)).

- **A/D converter mode register 0 (ADM0)**
- **A/D converter mode register 1 (ADM1)**
- **A/D converter mode register 2 (ADM2)**
- **10-bit A/D conversion result register (ADCR)**
- **8-bit A/D conversion result register (ADCRH)**
- **Analog input channel specification register (ADS)**
- **Conversion result comparison upper limit setting register (ADUL)**
- **Conversion result comparison lower limit setting register (ADLL)**
- **A/D test register (ADTES).**

2. Be sure to clear the bits 1 and 6 to “0”.

12.3.2 A/D converter mode register 0 (ADM0)

This register sets the conversion time for analog input to be A/D converted, and starts/stops conversion.

The ADM0 register can be set by a 1-bit or 8-bit memory manipulation instruction.

Reset signal generation clears this register to 00H.

Figure 12-3. Format of A/D Converter Mode Register 0 (ADM0)

Address: FFF30H After reset: 00H R/W

Symbol	<7>	<6>	5	4	3	2	1	<0>
ADM0	ADCS	ADMD	FR2[Note 1]	FR1[Note 1]	FR0[Note 1]	LV1[Note 1]	LV0[Note 1]	ADCE

ADCS	A/D conversion operation control
0	Stops conversion operation [When read] Conversion stopped/standby status
1	Enables conversion operation [When read] While in the software trigger mode: Conversion operation status While in the hardware trigger wait mode: A/D power supply stabilization wait status + conversion operation status

ADMD	Specification of the A/D conversion channel selection mode
0	Select mode
1	Scan mode

ADCE	A/D voltage comparator operation control[Note 2]
0	Stops A/D voltage comparator operation
1	Enables A/D voltage comparator operation

Notes 1. For details of the FR2 to FR0, LV1, LV0 bits, and A/D conversion, see **Table 12-3 A/D Conversion Time Selection**.

2. While in the software trigger mode or hardware trigger no-wait mode, the operation of the A/D voltage comparator is controlled by the ADCS and ADCE bits, and it takes 1 μs from the start of operation for the operation to stabilize. Therefore, when the ADCS bit is set to 1 after 1 μs or more has elapsed from the time ADCE bit is set to 1, the conversion result at that time has priority over the first conversion result. Otherwise, ignore data of the first conversion.

Cautions 1. Change the FR2 to FR0, LV1, and LV0 bits while conversion is stopped (ADCS = 0, ADCE = 0).

2. Do not set the ADCS bit to 1 and the ADCE bit to 0 at the same time.

3. Do not change the ADCE and ADCS bits from 0 to 1 at the same time by using an 8-bit manipulation instruction. Be sure to set these bits in the order described in 12.7 A/D Converter Setup Flowchart.

Table 12-1. Settings of ADCS and ADCE Bits

ADCS	ADCE	A/D Conversion Operation
0	0	Conversion stopped state
0	1	Conversion standby state
1	0	Setting prohibited
1	1	Conversion-in-progress state

Table 12-2. Setting and Clearing Conditions for ADCS Bit

A/D Conversion Mode			Set Conditions	Clear Conditions
Software trigger	Select mode	Sequential conversion mode	When 1 is written to ADCS	When 0 is written to ADCS
		One-shot conversion mode		● When 0 is written to ADCS ● The bit is automatically cleared to 0 when A/D conversion ends.
	Scan mode	Sequential conversion mode		When 0 is written to ADCS
		One-shot conversion mode		● When 0 is written to ADCS ● The bit is automatically cleared to 0 when conversion ends on the specified four channels.
Hardware trigger no-wait mode	Select mode	Sequential conversion mode		When 0 is written to ADCS
		One-shot conversion mode		When 0 is written to ADCS
	Scan mode	Sequential conversion mode		When 0 is written to ADCS
		One-shot conversion mode		When 0 is written to ADCS
Hardware trigger wait mode	Select mode	Sequential conversion mode	When a hardware trigger is input	When 0 is written to ADCS
		One-shot conversion mode		● When 0 is written to ADCS ● The bit is automatically cleared to 0 when A/D conversion ends.
	Scan mode	Sequential conversion mode		When 0 is written to ADCS
		One-shot conversion mode		● When 0 is written to ADCS ● The bit is automatically cleared to 0 when conversion ends on the specified four channels.

Figure 12-4. Timing Chart When A/D Voltage Comparator Is Used

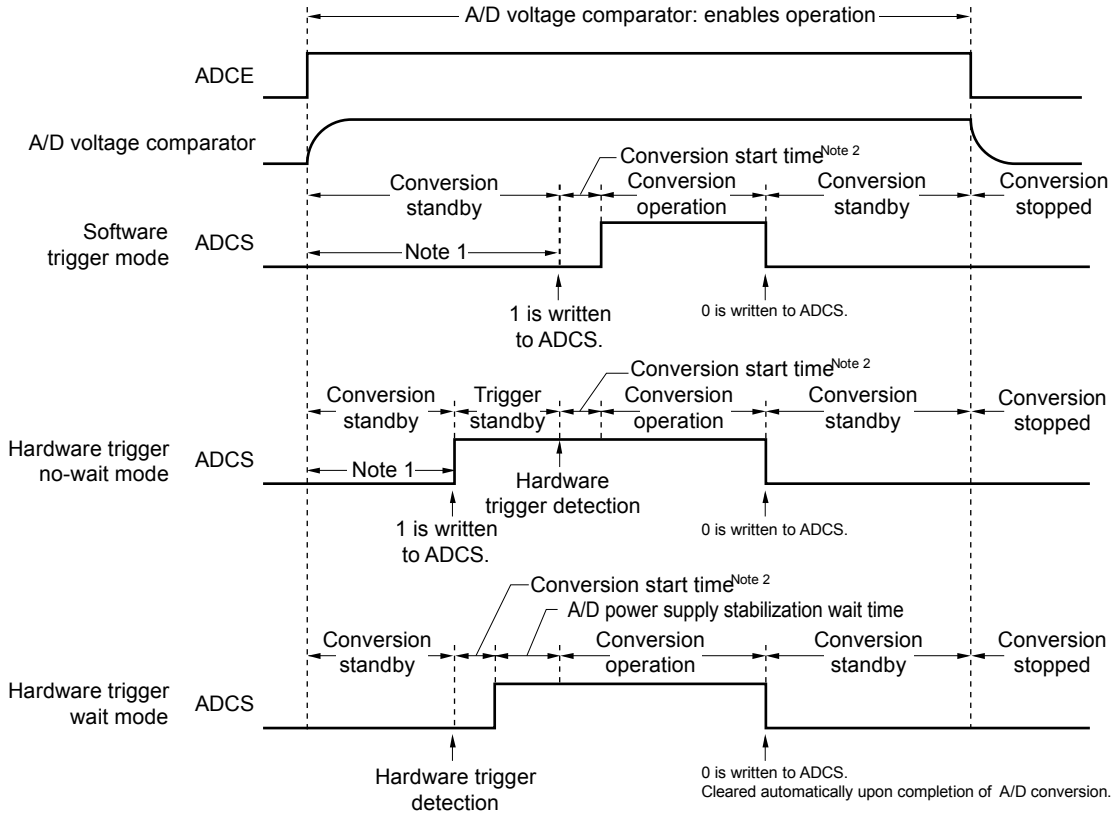

Notes 1. While in the software trigger mode or hardware trigger no-wait mode, the time from the rising of the ADCE bit to the falling of the ADCS bit must be 1 μs or longer to stabilize the internal circuit.

2. In starting conversion, the longer will take up to following time

ADM0			Conversion Clock (f_{AD})	Conversion Start Time (Number of f_{CLK} Clock)	
FR2	FR1	FR0		Software Trigger Mode/ Hardware Trigger No-wait Mode	Hardware Trigger Wait Mode
0	0	0	f_{CLK}/64	63	1
0	0	1	f_{CLK}/32	31	
0	1	0	f_{CLK}/16	15	
0	1	1	f_{CLK}/8	7	
1	0	0	f_{CLK}/6	5	
1	0	1	f_{CLK}/5	4	
1	1	0	f_{CLK}/4	3	
1	1	1	f_{CLK}/2	1	

However, for the second and subsequent conversion in sequential conversion mode and for conversion of the channel specified by scan 1, 2, and 3 in scan mode, the conversion start time and stabilization wait time for A/D power supply do not occur after a hardware trigger is detected.

Cautions 1. If using the hardware trigger wait mode, setting the ADCS bit to 1 is prohibited (but the bit is automatically switched to 1 when the hardware trigger signal is detected). However, it is possible to clear the ADCS bit to 0 to specify the A/D conversion standby status.

2. While in the one-shot conversion mode of the hardware trigger no-wait mode, the ADCS flag is not automatically cleared to 0 when A/D conversion ends. Instead, 1 is retained.

3. Only rewrite the value of the ADCE bit when ADCS = 0 (while in the conversion stopped/ conversion standby status).

4. To complete A/D conversion, specify at least the following time as the hardware trigger interval:

Hardware trigger no wait mode: 2 f_{CLK} clock + conversion start time + A/D conversion time

Hardware trigger wait mode: 2 f_{CLK} clock + conversion start time + A/D power supply stabilization wait time + A/D conversion time

Remark f_{CLK}: CPU/peripheral hardware clock frequency

Table 12-3. A/D Conversion Time Selection (1/4)

(1) When there is no A/D power supply stabilization wait time

Normal mode 1, 2 (software trigger mode/hardware trigger no-wait mode)

A/D Converter Mode Register 0 (ADM0)					Mode	Conversion Clock (f_{AD})	Number of Conversion Clock[Note]	Conversion Time	Conversion Time at 10-Bit Resolution 2.7 V ≤ V_{DD} ≤ 3.6 V				
FR2	FR1	FR0	LV1	LV0					f_{CLK} = 1 MHz	f_{CLK} = 4 MHz	f_{CLK} = 8 MHz	f_{CLK} = 16 MHz	f_{CLK} = 32 MHz
0	0	0	0	0	Normal 1	$f_{CLK}/64$	19 f_{AD} (number of sampling clock: 7 f_{AD})	$1216/f_{CLK}$	Setting prohibited	Setting prohibited	Setting prohibited	76 μs	38 μs
0	0	1				$f_{CLK}/32$		$608/f_{CLK}$			76 μs	38 μs	19 μs
0	1	0				$f_{CLK}/16$		$304/f_{CLK}$		76 μs	38 μs	19 μs	9.5 μs
0	1	1				$f_{CLK}/8$		$152/f_{CLK}$		38 μs	19 μs	9.5 μs	4.75 μs
1	0	0				$f_{CLK}/6$		$114/f_{CLK}$		28.5 μs	14.25 μs	7.125 μs	3.5625 μs
1	0	1				$f_{CLK}/5$		$95/f_{CLK}$	95 μs	23.75 μs	11.875 μs	5.938 μs	2.9688 μs
1	1	0				$f_{CLK}/4$		$76/f_{CLK}$	76 μs	19 μs	9.5 μs	4.75 μs	2.375 μs
1	1	1				$f_{CLK}/2$		$38/f_{CLK}$	38 μs	9.5 μs	4.75 μs	2.375 μs	Setting prohibited
0	0	0	0	1	Normal 2	$f_{CLK}/64$	17 f_{AD} (number of sampling clock: 5 f_{AD})	$1088/f_{CLK}$	Setting prohibited	Setting prohibited	Setting prohibited	68 μs	34 μs
0	0	1				$f_{CLK}/32$		$544/f_{CLK}$			68 μs	34 μs	17 μs
0	1	0				$f_{CLK}/16$		$272/f_{CLK}$		68 μs	34 μs	17 μs	8.5 μs
0	1	1				$f_{CLK}/8$		$136/f_{CLK}$		34 μs	17 μs	8.5 μs	4.25 μs
1	0	0				$f_{CLK}/6$		$102/f_{CLK}$		25.5 μs	12.75 μs	6.375 μs	3.1875 μs
1	0	1				$f_{CLK}/5$		$85/f_{CLK}$	85 μs	21.25 μs	10.625 μs	5.3125 μs	2.6563 μs
1	1	0				$f_{CLK}/4$		$68/f_{CLK}$	68 μs	17 μs	8.5 μs	4.25 μs	2.125 μs
1	1	1				$f_{CLK}/2$		$34/f_{CLK}$	34 μs	8.5 μs	4.25 μs	2.125 μs	Setting prohibited

Note These are the numbers of clock cycles when conversion is with 10-bit resolution. When eight-bit resolution is selected, the values are shorter by two cycles of the conversion clock (f_{AD}).

Cautions 1. The A/D conversion time must also be within the relevant range of conversion times (t_{CONV}) described in 30.7.1 A/D converter characteristics.

2. Rewrite the FR2 to FR0, LV1 and LV0 bits to other than the same data while conversion is stopped (ADCS = 0, ADCE = 0).

3. The above conversion time does not include conversion start time. Conversion start time add in the first conversion. Select conversion time, taking clock frequency errors into consideration.

Remark f_{CLK}: CPU/peripheral hardware clock frequency

Table 12-3. A/D Conversion Time Selection (2/4)

(2) When there is no A/D power supply stabilization wait time
Low-voltage mode 1, 2 (software trigger mode/hardware trigger no-wait mode)

A/D Converter Mode Register 0 (ADM0)					Mode	Conversion Clock (f_{AD})	Number of Conversion Clock[Note 4]	Conversion Time	Conversion Time at 10-Bit Resolution				
									1.6 V ≤ V_{DD} ≤ 3.6 V		**Note 1**	**Note 2**	**Note 3**
FR2	FR1	FR0	LV1	LV0					f_{CLK} = 1 MHz	f_{CLK} = 4 MHz	f_{CLK} = 8 MHz	f_{CLK} = 16 MHz	f_{CLK} = 32 MHz
0	0	0	1	0	Low-voltage 1	$f_{CLK}/64$	19 f_{AD} (number of sampling clock: 7 f_{AD})	$1216/f_{CLK}$	Setting prohibited	Setting prohibited	Setting prohibited	76 μs	38 μs
0	0	1				$f_{CLK}/32$		$608/f_{CLK}$			76 μs	38 μs	19 μs
0	1	0				$f_{CLK}/16$		$304/f_{CLK}$		76 μs	38 μs	19 μs	9.5 μs
0	1	1				$f_{CLK}/8$		$152/f_{CLK}$		38 μs	19 μs	9.5 μs	4.75 μs
1	0	0				$f_{CLK}/6$		$114/f_{CLK}$		28.5 μs	14.25 μs	7.125 μs	3.5625 μs
1	0	1				$f_{CLK}/5$		$95/f_{CLK}$	95 μs	23.75 μs	11.875 μs	5.938 μs	2.9688 μs
1	1	0				$f_{CLK}/4$		$76/f_{CLK}$	76 μs	19 μs	9.5 μs	4.75 μs	2.375 μs
1	1	1				$f_{CLK}/2$		$38/f_{CLK}$	38 μs	9.5 μs	4.75 μs	2.375 μs	Setting prohibited
0	0	0	1	1	Low-voltage 2	$f_{CLK}/64$	17 f_{AD} (number of sampling clock: 5 f_{AD})	$1088/f_{CLK}$	Setting prohibited	Setting prohibited	Setting prohibited	68 μs	34 μs
0	0	1				$f_{CLK}/32$		$544/f_{CLK}$			68 μs	34 μs	17 μs
0	1	0				$f_{CLK}/16$		$272/f_{CLK}$		68 μs	34 μs	17 μs	8.5 μs
0	1	1				$f_{CLK}/8$		$136/f_{CLK}$		34 μs	17 μs	8.5 μs	4.25 μs
1	0	0				$f_{CLK}/6$		$102/f_{CLK}$		25.5 μs	12.75 μs	6.375 μs	3.1875 μs
1	0	1				$f_{CLK}/5$		$85/f_{CLK}$	85 μs	21.25 μs	10.625 μs	5.3125 μs	2.6563 μs
1	1	0				$f_{CLK}/4$		$68/f_{CLK}$	68 μs	17 μs	8.5 μs	4.25 μs	2.125 μs
1	1	1				$f_{CLK}/2$		$34/f_{CLK}$	34 μs	8.5 μs	4.25 μs	2.125 μs	Setting prohibited

Notes 1. 1.8 V ≤ V_{DD} ≤ 3.6 V
2. 2.4 V ≤ V_{DD} ≤ 3.6 V
3. 2.7 V ≤ V_{DD} ≤ 3.6 V
4. These are the numbers of clock cycles when conversion is with 10-bit resolution. When eight-bit resolution is selected, the values are shorter by two cycles of the conversion clock (f_{AD}).

Cautions 1. The A/D conversion time must also be within the relevant range of conversion times (t_{CONV}) described in 30.7.1 A/D converter characteristics.
2. Rewrite the FR2 to FR0, LV1 and LV0 bits to other than the same data while conversion is stopped (ADCS = 0, ADCE = 0).
3. The above conversion time does not include conversion start time. Conversion start time add in the first conversion. Select conversion time, taking clock frequency errors into consideration.

Remark f_{CLK}: CPU/peripheral hardware clock frequency

Table 12-3. A/D Conversion Time Selection (3/4)

(3) When there is A/D power supply stabilization wait time
Normal mode 1, 2 (hardware trigger wait mode[Note 1])

A/D Converter Mode Register 0 (ADM0)					Mode	Conversion Clock (f_{AD})	Number of A/D Power Supply Stabilization Wait Clock	Number of Conversion Clock[Note 2]	A/D Power Supply Stabilization Wait Time + Conversion Time	A/D Power Supply Stabilization Wait Time + Conversion Time at 10-Bit Resolution				
										2.7 V ≤ V_{DD} ≤ 3.6 V				
FR2	FR1	FR0	LV1	LV0						f_{CLK} = 1 MHz	f_{CLK} = 4 MHz	f_{CLK} = 8 MHz	f_{CLK} = 16 MHz	f_{CLK} = 32 MHz
0	0	0	0	0	Normal 1	f_{CLK}/64	8 f_{AD}	19 f_{AD} (number of sampling clock: 7 f_{AD})	1728/f_{CLK}	Setting prohibited	Setting prohibited	Setting prohibited	108 μs	54 μs
0	0	1				f_{CLK}/32			864/f_{CLK}			108 μs	54 μs	27 μs
0	1	0				f_{CLK}/16			432/f_{CLK}		108 μs	54 μs	27 μs	13.5 μs
0	1	1				f_{CLK}/8			216/f_{CLK}		54 μs	27 μs	13.5 μs	6.75 μs
1	0	0				f_{CLK}/6			162/f_{CLK}		40.5 μs	20.25 μs	10.125 μs	5.0625 μs
1	0	1				f_{CLK}/5			135/f_{CLK}	135 μs	33.75 μs	16.875 μs	8.4375 μs	4.21875 μs
1	1	0				f_{CLK}/4			108/f_{CLK}	108 μs	27 μs	13.5 μs	6.75 μs	3.375 μs
1	1	1				f_{CLK}/2			54/f_{CLK}	54 μs	13.5 μs	6.75 μs	3.375 μs	Setting prohibited
0	0	0	0	1	Normal 2	f_{CLK}/64	8 f_{AD}	17 f_{AD} (number of sampling clock: 5 f_{AD})	1600/f_{CLK}	Setting prohibited	Setting prohibited	Setting prohibited	100 μs	50 μs
0	0	1				f_{CLK}/32			800/f_{CLK}			100 μs	50 μs	25 μs
0	1	0				f_{CLK}/16			400/f_{CLK}		100 μs	50 μs	25 μs	12.5 μs
0	1	1				f_{CLK}/8			200/f_{CLK}		50 μs	25 μs	12.5 μs	6.25 μs
1	0	0				f_{CLK}/6			150/f_{CLK}		37.5 μs	18.75 μs	9.375 μs	4.6875 μs
1	0	1				f_{CLK}/5			125/f_{CLK}	125 μs	31.25 μs	15.625 μs	7.8125 μs	3.90625 μs
1	1	0				f_{CLK}/4			100/f_{CLK}	100 μs	25 μs	12.5 μs	6.25 μs	3.125 μs
1	1	1				f_{CLK}/2			50/f_{CLK}	50 μs	12.5 μs	6.25 μs	3.125 μs	Setting prohibited

Notes 1. For the second and subsequent conversion in sequential conversion mode, and for conversion of the channel specified by scan 1, 2, and 3 in scan mode, the conversion start time and stabilization wait time for A/D power supply do not occur after a hardware trigger is detected (see **Table 12-3 (1/4)**).

2. These are the numbers of clock cycles when conversion is with 10-bit resolution. When eight-bit resolution is selected, the values are shorter by two cycles of the conversion clock (f_{AD}).

Cautions 1. The A/D conversion time must also be within the relevant range of conversion times (t_{CONV}) described in 30.7.1 A/D converter characteristics. Note that the conversion time (t_{CONV}) does not include the A/D power supply stabilization wait time.

2. Rewrite the FR2 to FR0, LV1 and LV0 bits to other than the same data while conversion is stopped (ADCS = 0, ADCE = 0).

3. The above conversion time does not include conversion start time. Conversion start time add in the first conversion. Select conversion time, taking clock frequency errors into consideration.

4. When hardware trigger wait mode, specify the conversion time, including the A/D power supply stabilization wait time from the hardware trigger detection.

Remark f_{CLK}: CPU/peripheral hardware clock frequency

Table 12-3. A/D Conversion Time Selection (4/4)

(4) When there is no A/D power supply stabilization wait time
Low-voltage mode 1, 2 (hardware trigger wait mode[Note 1])

A/D Converter Mode Register 0 (ADM0)					Mode	Conversion Clock (f_{AD})	Number of A/D Power Supply Stabilization Wait Clock	Number of Conversion Clock[Note 5]	A/D Power Supply Stabilization Wait Time + Conversion Time	A/D Power Supply Stabilization Wait Time + Conversion Time at 10-Bit Resolution				
										1.6 V ≤ V_{DD} ≤ 3.6 V		**Note 2**	**Note 3**	**Note 4**
FR2	FR1	FR0	LV1	LV0						f_{CLK} = 1 MHz	f_{CLK} = 4 MHz	f_{CLK} = 8 MHz	f_{CLK} = 16 MHz	f_{CLK} = 32 MHz
0	0	0	0	0	Low-voltage 1	f_{CLK}/64	2 f_{AD}	19 f_{AD} (number of sampling clock: 7 f_{AD})	1344/f_{CLK}	Setting prohibited	Setting prohibited	Setting prohibited	84 μs	42 μs
0	0	1				f_{CLK}/32			672/f_{CLK}			84 μs	42 μs	21 μs
0	1	0				f_{CLK}/16			336/f_{CLK}		84 μs	42 μs	21 μs	10.5 μs
0	1	1				f_{CLK}/8			168/f_{CLK}		42 μs	21 μs	10.5 μs	5.25 μs
1	0	0				f_{CLK}/6			126/f_{CLK}		31.25 μs	15.75 μs	7.875 μs	3.9375 μs
1	0	1				f_{CLK}/5			105/f_{CLK}	105 μs	26.25 μs	13.125 μs	6.5625 μs	3.238125 μs
1	1	0				f_{CLK}/4			84/f_{CLK}	84 μs	21 μs	10.5 μs	5.25 μs	2.625 μs
1	1	1				f_{CLK}/2			42/f_{CLK}	42 μs	10.5 μs	5.25 μs	2.625 μs	Setting prohibited
0	0	0	0	1	Low-voltage 2	f_{CLK}/64	2 f_{AD}	17 f_{AD} (number of sampling clock: 5 f_{AD})	1216/f_{CLK}	Setting prohibited	Setting prohibited	Setting prohibited	76 μs	38 μs
0	0	1				f_{CLK}/32			608/f_{CLK}			76 μs	38 μs	19 μs
0	1	0				f_{CLK}/16			304/f_{CLK}		76 μs	38 μs	19 μs	9.5 μs
0	1	1				f_{CLK}/8			152/f_{CLK}		38 μs	19 μs	9.5 μs	4.75 μs
1	0	0				f_{CLK}/6			114/f_{CLK}		28.5 μs	14.25 μs	7.125 μs	3.5625 μs
1	0	1				f_{CLK}/5			96/f_{CLK}	96 μs	23.75 μs	12 μs	5.938 μs	2.9688 μs
1	1	0				f_{CLK}/4			76/f_{CLK}	76 μs	19 μs	9.5 μs	4.75 μs	2.375 μs
1	1	1				f_{CLK}/2			38/f_{CLK}	38 μs	9.5 μs	4.75 μs	2.375 μs	Setting prohibited

Notes 1. For the second and subsequent conversion in sequential conversion mode and for conversion of the channel specified by scan 1, 2, and 3 in scan mode,, the conversion start time and stabilization wait time for A/D power supply do not occur after a hardware trigger is detected (see **Table 12-3 (2/4)**).

2. 1.8 V ≤ V_{DD} ≤ 3.6 V

3. 2.4 V ≤ V_{DD} ≤ 3.6 V

4. 2.7 V ≤ V_{DD} ≤ 3.6 V

5. These are the numbers of clock cycles when conversion is with 10-bit resolution. When eight-bit resolution is selected, the values are shorter by two cycles of the conversion clock (f_{AD}).

Cautions 1. The A/D conversion time must also be within the relevant range of conversion times (t_{CONV}) described in 30.7.1 A/D converter characteristics. Note that the conversion time (t_{CONV}) does not include the A/D power supply stabilization wait time.

2. Rewrite the FR2 to FR0, LV1 and LV0 bits to other than the same data while conversion is stopped (ADCS = 0, ADCE = 0).

3. The above conversion time does not include conversion start time. Conversion start time add in the first conversion. Select conversion time, taking clock frequency errors into consideration.

4. When hardware trigger wait mode, specify the conversion time, including the A/D power supply stabilization wait time from the hardware trigger detection.

Remark f_{CLK}: CPU/peripheral hardware clock frequency

Figure 12-5. A/D Converter Sampling and A/D Conversion Timing (Example for Software Trigger Mode)

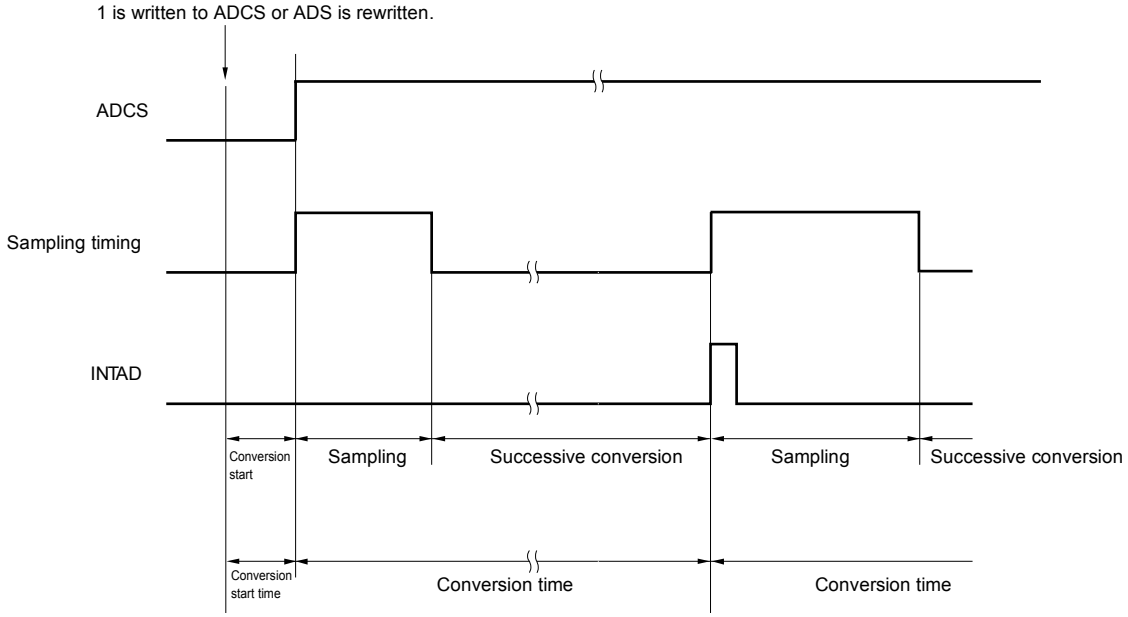

12.3.3 A/D converter mode register 1 (ADM1)

This register is used to specify the A/D conversion trigger, conversion mode, and hardware trigger signal.

The ADM1 register can be set by a 1-bit or 8-bit memory manipulation instruction.

Reset signal generation clears this register to 00H.

Figure 12-6. Format of A/D Converter Mode Register 1 (ADM1)

Address: FFF32H After reset: 00H R/W

Symbol	7	6	5	4	3	2	1	0
ADM1	ADTMD1	ADTMD0	ADSCM	0	0	0	ADTRS1	ADTRS0

ADTMD1	ADTMD0	Selection of the A/D conversion trigger mode
0	×	Software trigger mode
1	0	Hardware trigger no-wait mode
1	1	Hardware trigger wait mode

ADSCM	Specification of the A/D conversion mode
0	Sequential conversion mode
1	One-shot conversion mode

ADTRS1	ADTRS0	Selection of the hardware trigger signal
0	0	End of timer channel 01 count or capture interrupt signal (INTTM01)
0	1	Setting prohibited
1	0	Real-time clock interrupt signal (INTRTC)
1	1	12-bit interval timer interrupt signal (INTIT)

Cautions 1. Rewrite the value of the ADM1 register while conversion is stopped (ADCS = 0, ADCE = 0).

2. To complete A/D conversion, specify at least the following time as the hardware trigger interval:
Hardware trigger no wait mode: 2 f_{CLK} clock + conversion start time + A/D conversion time
Hardware trigger wait mode: 2 f_{CLK} clock + conversion start time + A/D power supply stabilization wait time + A/D conversion time

3. In modes other than SNOOZE mode, input of the next INTRTC or INTIT will not be recognized as a valid hardware trigger for up to four f_{CLK} cycles after the first INTRTC or INTIT is input.

Remarks 1. ×: Don't care

2. f_{CLK}: CPU/peripheral hardware clock frequency

12.3.4 A/D converter mode register 2 (ADM2)

This register is used to select the A/D converter reference voltage, check the upper limit and lower limit A/D conversion result values, select the resolution, and specify whether to use the SNOOZE mode.

The ADM2 register can be set by a 1-bit or 8-bit memory manipulation instruction.

Reset signal generation clears this register to 00H.

Figure 12-7. Format of A/D Converter Mode Register 2 (ADM2) (1/2)

Address: F0010H After reset: 00H R/W

Symbol	7	6	5	4	<3>	<2>	1	<0>
ADM2	ADREFP1	ADREFP0	ADREFM	0	ADRCK	AWC	0	ADTYP

ADREFP1	ADREFP0	Selection of the + side reference voltage source of the A/D converter
0	0	Supplied from V_{DD}
0	1	Supplied from P20/AV_{REFP}/ANI0
1	0	Supplied from the internal reference voltage (1.45 V) **Note**
1	1	Setting prohibited

- When ADREFP1 or ADREFP0 bit is rewritten, this must be configured in accordance with the following procedures.
  (1) Set ADCE = 0
  (2) Change the values of ADREFP1 and ADREFP0
  (3) Reference voltage stabilization wait time (A)
  (4) Set ADCE = 1
  (5) Reference voltage stabilization wait time (B)
  When ADREFP1 and ADREFP0 are set to 1 and 0, the setting is changed to A = 5 μs, B = 1 μs.
  When ADREFP1 and ADREFP0 are set to 0 and 0 or 0 and 1, A needs no wait and B = 1 μs.
  After (5) stabilization time, start the A/D conversion.
- When ADREFP1 and ADREFP0 are set to 1 and 0, respectively, A/D conversion cannot be performed on the temperature sensor output voltage and internal reference voltage output.
  Be sure to perform A/D conversion while ADISS = 0.

ADREFM	Selection of the – side reference voltage source of the A/D converter
0	Supplied from V_{SS}
1	Supplied from P21/AV_{REFM}/ANI1

Note This setting can be used only in HS (high-speed main) mode.

Cautions 1. Rewrite the value of the ADM2 register while conversion is stopped (ADCS = 0, ADCE = 0).

2. Do not set the ADREFP1 bit to 1 when shifting to STOP mode, or to HALT mode while the CPU is operating on the subsystem clock. When the internal reference voltage is selected (ADREFP1, ADREFP0 = 1, 0), the A/D converter reference voltage current (I_{ADREF}) indicated in 30.5.2 Supply current characteristics will be added.

3. When using AV_{REFP} and AV_{REFM}, specify ANI0 and ANI1 as the analog input channels and specify input mode by using the port mode register.

Figure 12-7. Format of A/D Converter Mode Register 2 (ADM2) (2/2)

Address: F0010H After reset: 00H R/W

Symbol	7	6	5	4	<3>	<2>	1	<0>
ADM2	ADREFP1	ADREFP0	ADREFM	0	ADRCK	AWC	0	ADTYP

ADRCK	Checking the upper limit and lower limit conversion result values
0	The interrupt signal (INTAD) is output when the ADLL register ≤ the ADCR register ≤ the ADUL register (AREA 1).
1	The interrupt signal (INTAD) is output when the ADCR register < the ADLL register (AREA 2) or the ADUL register < the ADCR register (AREA 3).
Figure 12-8 shows the generation range of the interrupt signal (INTAD) for AREA 1 to AREA 3.	

AWC	Specification of the SNOOZE mode
0	Do not use the SNOOZE mode function.
1	Use the SNOOZE mode function.

When there is a hardware trigger signal in the STOP mode, the STOP mode is exited, and A/D conversion is performed without operating the CPU (the SNOOZE mode).

- The SNOOZE mode function can only be specified when the high-speed on-chip oscillator clock is selected for the CPU/peripheral hardware clock (f_{CLK}). If any other clock is selected, specifying this mode is prohibited.
- Using the SNOOZE mode function in the software trigger mode or hardware trigger no-wait mode is prohibited.
- Using the SNOOZE mode function in the sequential conversion mode is prohibited.
- When using the SNOOZE mode function, specify a hardware trigger interval of at least "shift time to SNOOZE mode[Note] + conversion start time + A/D power supply stabilization wait time + A/D conversion time +2 f_{CLK} clock"
- Even when using SNOOZE mode, be sure to set the AWC bit to 0 in normal operation mode and change it to 1 just before shifting to STOP mode.
  Also, be sure to change the AWC bit to 0 after returning from STOP mode to normal operation mode.
  If the AWC bit is left set to 1, A/D conversion will not start normally in spite of the subsequent SNOOZE or normal operation mode.

ADTYP	Selection of the A/D conversion resolution
0	10-bit resolution
1	8-bit resolution

Note Refer to "Transition time from STOP mode to SNOOZE mode" in **19.3.3 SNOOZE mode**

Caution Only rewrite the value of the ADM2 register while conversion operation is stopped (ADCS = 0, ADCE = 0).

Figure 12-8. ADRCK Bit Interrupt Signal Generation Range

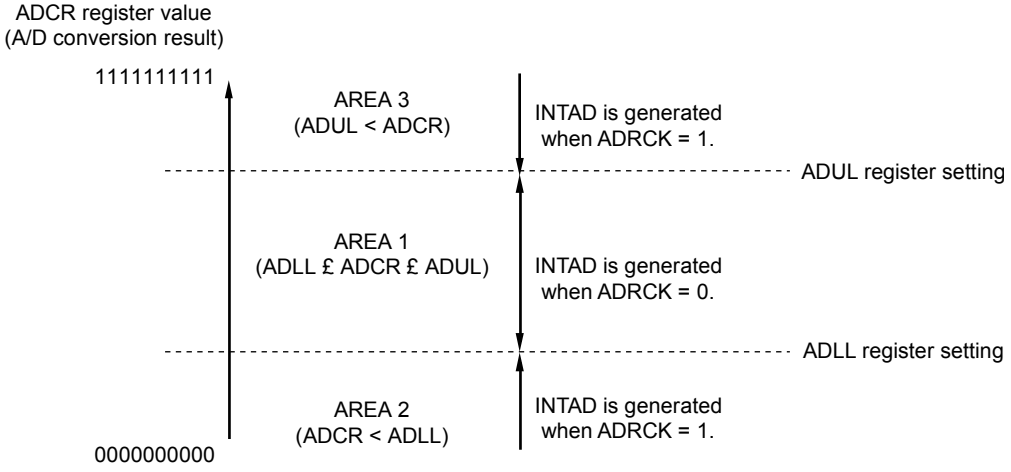

Remark If INTAD does not occur, the A/D conversion result is not stored in the ADCR or ADCRH register.

12.3.5 10-bit A/D conversion result register (ADCR)

This register is a 16-bit register that stores the A/D conversion result. The lower 6 bits are fixed to 0. Each time A/D conversion ends, the conversion result is loaded from the successive approximation register (SAR). The higher 8 bits of the conversion result are stored in FFF1FH and the lower 2 bits are stored in the higher 2 bits of FFF1EH[Note].

The ADCR register can be read by a 16-bit memory manipulation instruction.

Reset signal generation clears this register to 0000H.

Note If the A/D conversion result is outside the range specified by using the A/D conversion comparison function (the value specified by the ADRCK bit of the ADM2 register and ADUL/ADLL registers; see Figure 12-8), the result is not stored.

Figure 12-9. Format of 10-bit A/D Conversion Result Register (ADCR)

Address: FFF1FH, FFF1EH After reset: 0000H R

Symbol	FFF1FH								FFF1EH							
ADCR											0	0	0	0	0	0

Cautions 1. When 8-bit resolution A/D conversion is selected (when the ADTYP bit of A/D converter mode register 2 (ADM2) is 1) and the ADCR register is read, 0 is read from the lower two bits (bits 7 and 6 of the ADCR register).

2. When the ADCR register is accessed in 16-bit units, the higher 10 bits of the conversion result are read in order starting at bit 15.

12.3.6 8-bit A/D conversion result register (ADCRH)

This register is an 8-bit register that stores the A/D conversion result. The higher 8 bits of 10-bit resolution are stored[Note].

The ADCRH register can be read by an 8-bit memory manipulation instruction.

Reset signal generation clears this register to 00H.

Note If the A/D conversion result is outside the range specified by using the A/D conversion comparison function (the value specified by the ADRCK bit of the ADM2 register and ADUL/ADLL registers; see **Figure 12-8**), the result is not stored.

Figure 12-10. Format of 8-bit A/D Conversion Result Register (ADCRH)

Address: FFF1FH After reset: 00H R

Symbol	7	6	5	4	3	2	1	0
ADCRH								

Caution When writing to the A/D converter mode register 0 (ADM0), analog input channel specification register (ADS), and A/D port configuration register (ADPC), the contents of the ADCRH register may become undefined. Read the conversion result following conversion completion before writing to the ADM0, ADS, and ADPC registers. Using timing other than the above may cause an incorrect conversion result to be read.

12.3.7 Analog input channel specification register (ADS)

This register specifies the input channel of the analog voltage to be A/D converted.

The ADS register can be set by a 1-bit or 8-bit memory manipulation instruction.

Reset signal generation clears this register to 00H.

Figure 12-11. Format of Analog Input Channel Specification Register (ADS)

Address: FFF31H After reset: 00H R/W

Symbol	7	6	5	4	3	2	1	0
ADS	ADISS	0	0	ADS4	ADS3	ADS2	ADS1	ADS0

○ Select mode (ADMD = 0)

ADISS	ADS4	ADS3	ADS2	ADS1	ADS0	Analog input channel	Input source
0	0	0	0	0	0	ANI0	P20/ANI0/AVREFP pin
0	0	0	0	0	1	ANI1	P21/ANI1/AVREFM pin
0	0	0	0	1	0	ANI2	P22/ANI2 pin
0	0	0	0	1	1	ANI3	P23/ANI3 pin
0	1	0	0	0	0	ANI16	P03/ANI16 pin
0	1	0	0	0	1	ANI17	P02/ANI17 pin
0	1	0	0	1	0	ANI18	P147/ANI18 pin
0	1	0	0	1	1	ANI19	P120/ANI19 pin
1	0	0	0	0	0	–	Temperature sensor output[Note]
1	0	0	0	0	1	–	Internal reference voltage output (1.45 V)[Note]
Other than above						Setting prohibited	

Note This setting can be used only in HS (high-speed main) mode.

○ Scan mode (ADMD = 1)

ADISS	ADS4	ADS3	ADS2	ADS1	ADS0	Analog input channel			
						0	1	2	3
0	0	0	0	0	0	ANI0	ANI1	ANI2	ANI3
Other than above						Setting prohibited			

Cautions 1. Be sure to clear bits 5 and 6 to "0".

2. Set a channel to be set the analog input by ADPC and PMCx registers in the input mode by using port mode registers 0, 2, 12, or 14 (PM0, PM2, PM12, PM14).

3. Do not set the pin that is set by the A/D port configuration register (ADPC) as digital I/O by the ADS register.

4. Do not set the pin that is set by port mode control register 0 (PMC0) as digital I/O by the ADS register.

5. Rewrite the value of the ADISS bit while conversion is stopped (ADCS = 0, ADCE = 0).

6. If using AV_{REFP} as the + side reference voltage of the A/D converter, do not select ANI0 as an A/D conversion channel.

7. If using AV_{REFM} as the – side reference voltage of the A/D converter, do not select ANI1 as an A/D conversion channel.

Cautions 8. If the ADISS bit is set to 1, the internal reference voltage (1.45 V) cannot be used for the + side reference voltage. After the ADISS bit is set to 1, the initial conversion result cannot be used. For the setting flow, see 12.7.4 Setup when temperature sensor output voltage/internal reference voltage is selected (example for software trigger mode and one-shot conversion mode).

9. Do not set the ADISS bit to 1 when shifting to STOP mode, or to HALT mode while the CPU is operating on the subsystem clock. When the ADISS bit is set to 1, the A/D converter reference voltage current (I_{ADREF}) indicated in 30.4.2 Supply current characteristics will be added.

12.3.8 Conversion result comparison upper limit setting register (ADUL)

This register is used to specify the setting for checking the upper limit of the A/D conversion results.

The A/D conversion results and ADUL register value are compared, and interrupt signal (INTAD) generation is controlled in the range specified for the ADRCK bit of A/D converter mode register 2 (ADM2) (shown in **Figure 12-8**).

The ADUL register can be set by an 8-bit memory manipulation instruction.

Reset signal generation sets this register to FFH.

Figure 12-12. Format of Conversion Result Comparison Upper Limit Setting Register (ADUL)

Address: F0011H After reset: FFH R/W

Symbol	7	6	5	4	3	2	1	0
ADUL	ADUL7	ADUL6	ADUL5	ADUL4	ADUL3	ADUL2	ADUL1	ADUL0

12.3.9 Conversion result comparison lower limit setting register (ADLL)

This register is used to specify the setting for checking the lower limit of the A/D conversion results.

The A/D conversion results and ADLL register value are compared, and interrupt signal (INTAD) generation is controlled in the range specified for the ADRCK bit of A/D converter mode register 2 (ADM2) (shown in **Figure 12-8**).

The ADLL register can be set by an 8-bit memory manipulation instruction.

Reset signal generation clears this register to 00H.

Figure 12-13. Format of Conversion Result Comparison Lower Limit Setting Register (ADLL)

Address: F0012H After reset: 00H R/W

Symbol	7	6	5	4	3	2	1	0
ADLL	ADLL7	ADLL6	ADLL5	ADLL4	ADLL3	ADLL2	ADLL1	ADLL0

Cautions 1. When A/D conversion with 10-bit resolution is selected, the eight higher-order bits of the 10-bit A/D conversion result register (ADCR) are compared with the values in the ADUL and ADLL registers.

2. Only write new values to the ADUL and ADLL registers while conversion is stopped (ADCS = 0, ADCE = 0).

3. The setting of the ADUL registers must be greater than that of the ADLL register.

12.3.10 A/D test register (ADTES)

This register is used to select the + side reference voltage or - side reference voltage for the converter, an analog input channel (ANIxx), the temperature sensor output voltage, or the internal reference voltage (1.45 V) as the target for A/D conversion.

When using this register to test the converter, set as follows.

- For zero-scale measurement, select the - side reference voltage as the target for conversion.
- For full-scale measurement, select the + side reference voltage as the target for conversion.

The ADTES register can be set by an 8-bit memory manipulation instruction.

Reset signal generation clears this register to 00H.

Figure 12-14. Format of A/D Test Register (ADTES)

Address: F0013H After reset: 00H R/W

Symbol	7	6	5	4	3	2	1	0
ADTES	0	0	0	0	0	0	ADTES1	ADTES0

ADTES1	ADTES0	A/D conversion target
0	0	ANIxx/temperature sensor output voltage[Note]/internal reference voltage (1.45 V)[Note] (This is specified using the analog input channel specification register (ADS).)
1	0	The - side reference voltage (selected by the ADREFM bit of the ADM2 register)
1	1	The + side reference voltage (selected by the ADREFP1 or ADREFP0 bit of the ADM2 register)
Other than above		Setting prohibited

Note The temperature sensor output voltage and internal reference voltage (1.45 V) can be selected only in the HS (high-speed main) mode.

12.3.11 Registers controlling port function of analog input pins

Set up the registers for controlling the functions of the ports shared with the analog input pins of the A/D converter (port mode registers (PMxx), port mode control registers (PMCxx), and A/D port configuration register (ADPC)). For details, see **5.3.1 Port mode registers (PMxx)**, **5.3.6 Port mode control registers (PMCxx)**, and **5.3.7 A/D port configuration register (ADPC)**.

When using the ANI0 to ANI3 pins for analog input of the A/D converter, set the port mode register (PMxx) bit corresponding to each port to 1 and select analog input through the A/D port configuration register (ADPC).

When using the ANI16 to ANI19 pins for analog input of the A/D converter, set the port mode register (PMxx) bit and port mode control register (PMCxx) bit corresponding to each port to 1.

12.4 A/D Converter Conversion Operations

The A/D converter conversion operations are described below.

<1> The voltage input to the selected analog input channel is sampled by the sample & hold circuit.

<2> When sampling has been done for a certain time, the sample & hold circuit is placed in the hold state and the sampled voltage is held until the A/D conversion operation has ended.

<3> Bit 9 of the successive approximation register (SAR) is set. The series resistor string voltage tap is set to (1/2) AV_{REF} by the tap selector.

<4> The voltage difference between the series resistor string voltage tap and sampled voltage is compared by the voltage comparator. If the analog input is greater than (1/2) AV_{REF}, the MSB bit of the SAR register remains set to 1. If the analog input is smaller than (1/2) AV_{REF}, the MSB bit is reset to 0.

<5> Next, bit 8 of the SAR register is automatically set to 1, and the operation proceeds to the next comparison. The series resistor string voltage tap is selected according to the preset value of bit 9, as described below.

- Bit 9 = 1: (3/4) AV_{REF}
- Bit 9 = 0: (1/4) AV_{REF}

The voltage tap and sampled voltage are compared and bit 8 of the SAR register is manipulated as follows.

- Sampled voltage ≥ Voltage tap: Bit 8 = 1
- Sampled voltage < Voltage tap: Bit 8 = 0

<6> Comparison is continued in this way up to bit 0 of the SAR register.

<7> Upon completion of the comparison of 10 bits, an effective digital result value remains in the SAR register, and the result value is transferred to the A/D conversion result register (ADCR, ADCRH) and then latched [Note 1].
At the same time, the A/D conversion end interrupt request (INTAD) can also be generated [Note 1].

<8> Repeat steps <1> to <7>, until the ADCS bit is cleared to 0[Note 2].
To stop the A/D converter, clear the ADCS bit to 0.

Notes 1. If the A/D conversion result is outside the A/D conversion result range specified by the ADRCK bit and the ADUL and ADLL registers (see Figure 12-8), the A/D conversion result interrupt request signal is not generated and no A/D conversion results are stored in the ADCR and ADCRH registers.

2. While in the sequential conversion mode, the ADCS flag is not automatically cleared to 0. This flag is not automatically cleared to 0 while in the one-shot conversion mode of the hardware trigger no-wait mode, either. Instead, 1 is retained.

Remarks 1. Two types of the A/D conversion result registers are available.

- ADCR register (16 bits): Store 10-bit A/D conversion value
- ADCRH register (8 bits): Store 8-bit A/D conversion value

2. AV_{REF}: The + side reference voltage of the A/D converter. This can be selected from AV_{REFP}, the internal reference voltage (1.45 V), and V_{DD}.

Figure 12-15. Conversion Operation of A/D Converter (Software Trigger Mode)

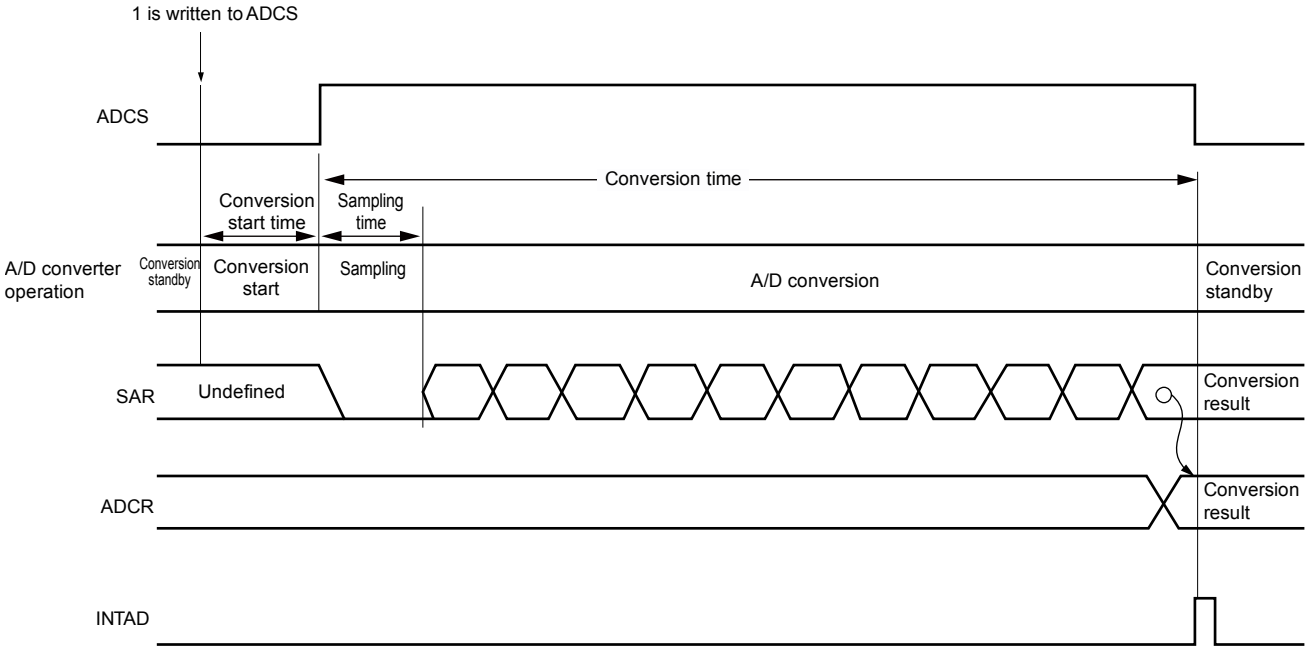

In one-shot conversion mode, the ADCS bit is automatically cleared to 0 after completion of A/D conversion.

In sequential conversion mode, A/D conversion operations proceed continuously until the software clears bit 7 (ADCS) of the A/D converter mode register 0 (ADM0) to 0.

Writing to the analog input channel specification register (ADS) during A/D conversion interrupts the current conversion after which A/D conversion of the analog input specified by the ADS register proceeds. Data from the A/D conversion that was in progress are discarded.

Reset signal generation clears the A/D conversion result register (ADCR, ADCRH) to 0000H or 00H.

12.5 Input Voltage and Conversion Results

The relationship between the analog input voltage input to the analog input pins (ANI0 to ANI3 and ANI16 to ANI19) and the theoretical A/D conversion result (stored in the 10-bit A/D conversion result register (ADCR)) is shown by the following expression.

$$SAR = INT\left(\frac{V_{AIN}}{AV_{REF}} \times 1024 + 0.5\right)$$

$$ADCR = SAR \times 64$$

or

$$\left(\frac{ADCR}{64} - 0.5\right) \times \frac{AV_{REF}}{1024} \leq V_{AIN} < \left(\frac{ADCR}{64} + 0.5\right) \times \frac{AV_{REF}}{1024}$$

where, INT( ): Function which returns integer part of value in parentheses

V_{AIN}: Analog input voltage

AV_{REF}: AV_{REF} pin voltage

ADCR: A/D conversion result register (ADCR) value

SAR: Successive approximation register

Figure 12-16 shows the relationship between the analog input voltage and the A/D conversion result.

Figure 12-16. Relationship Between Analog Input Voltage and A/D Conversion Result

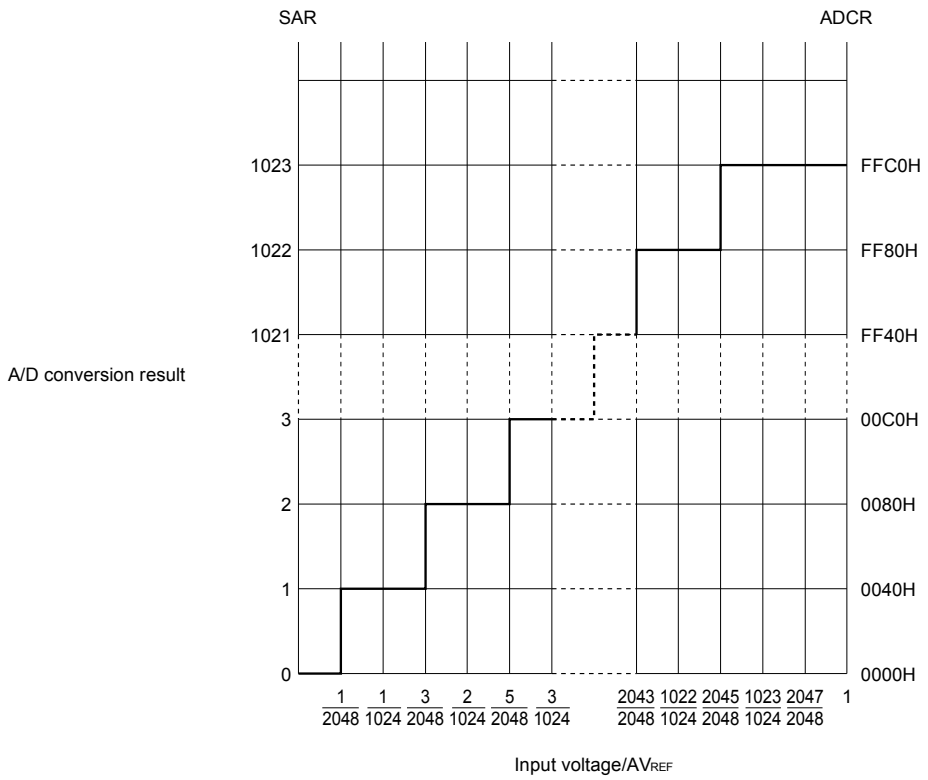

Remark AV_{REF}: The + side reference voltage of the A/D converter. This can be selected from AV_{REFP}, the internal reference voltage (1.45 V), and V_{DD}.

12.6 A/D Converter Operation Modes

The operation of each A/D converter mode is described below. In addition, the procedure for specifying each mode is described in **12.7 A/D Converter Setup Flowchart**.

12.6.1 Software trigger mode (select mode, sequential conversion mode)

<1> In the stop status, the ADCE bit of A/D converter mode register 0 (ADM0) is set to 1, and the system enters the A/D conversion standby status.

<2> After the software counts up to the stabilization wait time (1 μs), the ADCS bit of the ADM0 register is set to 1 to perform the A/D conversion of the analog input specified by the analog input channel specification register (ADS).

<3> When A/D conversion ends, the conversion result is stored in the A/D conversion result register (ADCR, ADCRH), and the A/D conversion end interrupt request signal (INTAD) is generated. After A/D conversion ends, the next A/D conversion immediately starts.

<4> When ADCS is overwritten with 1 during conversion operation, the current A/D conversion is interrupted, and conversion restarts. The partially converted data is discarded.

<5> When the value of the ADS register is rewritten or overwritten during conversion operation, the current A/D conversion is interrupted, and A/D conversion is performed on the analog input respecified by the ADS register. The partially converted data is discarded.

<6> Even if a hardware trigger is input during conversion operation, A/D conversion does not start.

<7> When ADCS is cleared to 0 during conversion operation, the current A/D conversion is interrupted, and the system enters the A/D conversion standby status.

<8> When ADCE is cleared to 0 while in the A/D conversion standby status, the A/D converter enters the stop status. When ADCE = 0, specifying 1 for ADCS is ignored and A/D conversion does not start.

Figure 12-17. Example of Software Trigger Mode (Select mode, Sequential Conversion Mode) Operation Timing

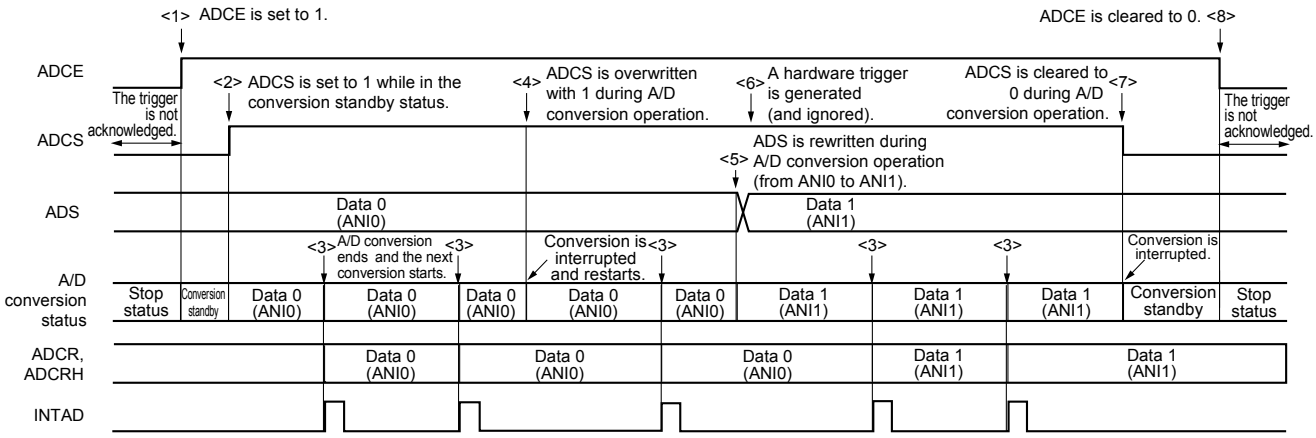

12.6.2 Software trigger mode (select mode, one-shot conversion mode)

<1> In the stop status, the ADCE bit of A/D converter mode register 0 (ADM0) is set to 1, and the system enters the A/D conversion standby status.

<2> After the software counts up to the stabilization wait time (1 μs), the ADCS bit of the ADM0 register is set to 1 to perform the A/D conversion of the analog input specified by the analog input channel specification register (ADS).

<3> When A/D conversion ends, the conversion result is stored in the A/D conversion result register (ADCR, ADCRH), and the A/D conversion end interrupt request signal (INTAD) is generated.

<4> After A/D conversion ends, the ADCS bit is automatically cleared to 0, and the system enters the A/D conversion standby status.

<5> When ADCS is overwritten with 1 during conversion operation, the current A/D conversion is interrupted, and conversion restarts. The partially converted data is discarded.

<6> When the value of the ADS register is rewritten or overwritten during conversion operation, the current A/D conversion is interrupted, and A/D conversion is performed on the analog input respecified by the ADS register. The partially converted data is discarded.

<7> When ADCS is cleared to 0 during conversion operation, the current A/D conversion is interrupted, and the system enters the A/D conversion standby status.

<8> When ADCE is cleared to 0 while in the A/D conversion standby status, the A/D converter enters the stop status. When ADCE = 0, specifying 1 for ADCS is ignored and A/D conversion does not start. In addition, A/D conversion does not start even if a hardware trigger is input while in the A/D conversion standby status.

Figure 12-18. Example of Software Trigger Mode (Select mode, One-Shot Conversion Mode) Operation Timing

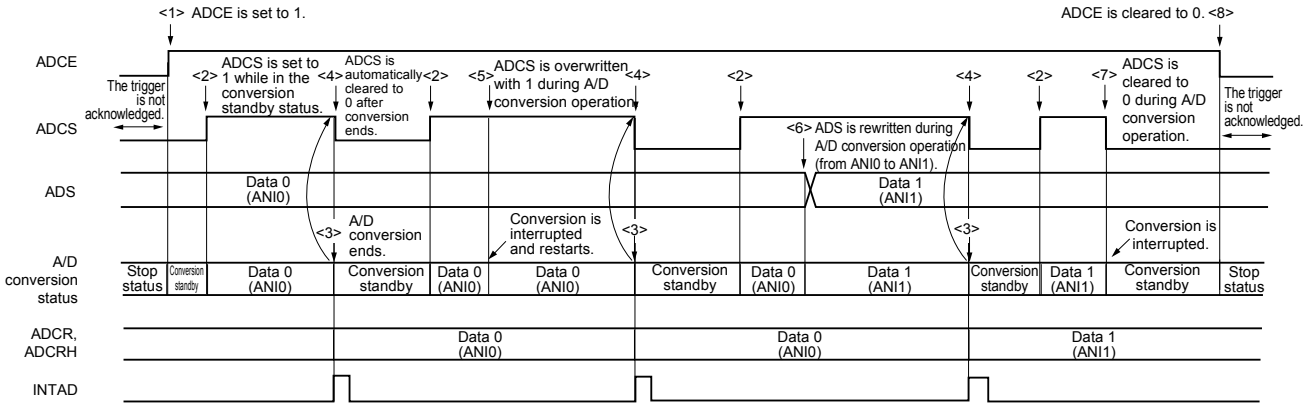

12.6.3 Software trigger mode (scan mode, sequential conversion mode)

<1> In the stop status, the ADCE bit of A/D converter mode register 0 (ADM0) is set to 1, and the system enters the A/D conversion standby status.

<2> After the software counts up to the stabilization wait time (1 μs), the ADCS bit of the ADM0 register is set to 1 to perform A/D conversion on the four analog input channels specified by scan 0 to scan 3, which are specified by the analog input channel specification register (ADS). A/D conversion is performed on the analog input channels in order, starting with that specified by scan 0.

<3> A/D conversion is sequentially performed on the four analog input channels, the conversion results are stored in the A/D conversion result register (ADCR, ADCRH) each time conversion ends, and the A/D conversion end interrupt request signal (INTAD) is generated. After A/D conversion of the four channels ends, the A/D conversion of the channel following the specified channel automatically starts (until all four channels are finished).

<4> When ADCS is overwritten with 1 during conversion operation, the current A/D conversion is interrupted, and conversion restarts at the first channel. The partially converted data is discarded.

<5> When the value of the ADS register is rewritten or overwritten during conversion operation, the current A/D conversion is interrupted, and A/D conversion is performed on the first channel respecified by the ADS register. The partially converted data is discarded.

<6> Even if a hardware trigger is input during conversion operation, A/D conversion does not start.

<7> When ADCS is cleared to 0 during conversion operation, the current A/D conversion is interrupted, and the system enters the A/D conversion standby status.

<8> When ADCE is cleared to 0 while in the A/D conversion standby status, the A/D converter enters the stop status. When ADCE = 0, specifying 1 for ADCS is ignored and A/D conversion does not start.

Figure 12-19. Example of Software Trigger Mode (Scan Mode, Sequential Conversion Mode) Operation Timing

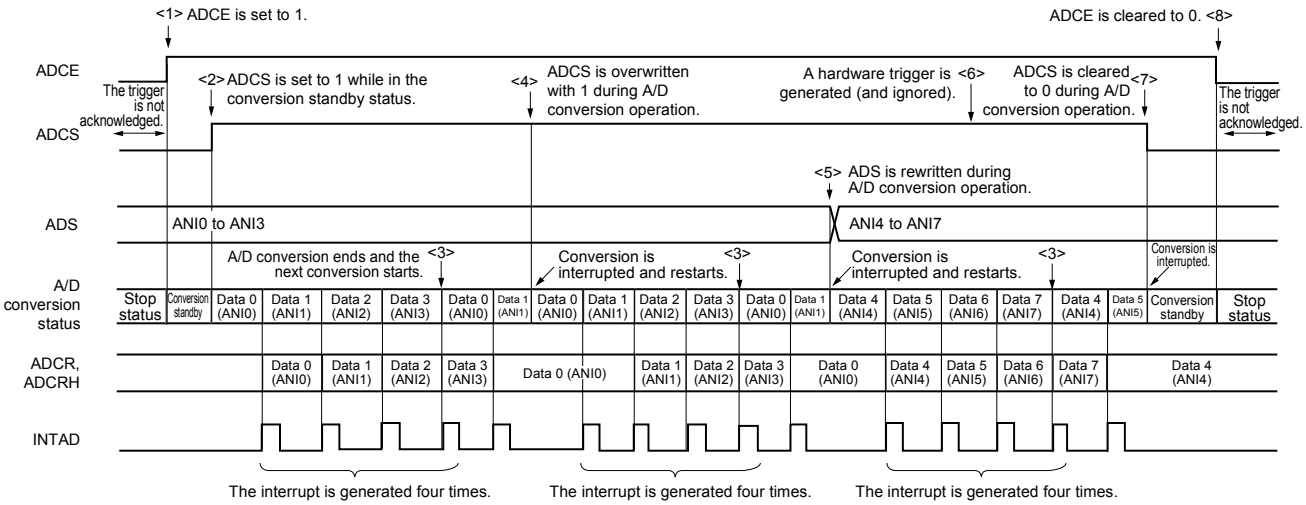

12.6.4 Software trigger mode (scan mode, one-shot conversion mode)

<1> In the stop status, the ADCE bit of A/D converter mode register 0 (ADM0) is set to 1, and the system enters the A/D conversion standby status.

<2> After the software counts up to the stabilization wait time (1 μs), the ADCS bit of the ADM0 register is set to 1 to perform A/D conversion on the four analog input channels specified by scan 0 to scan 3, which are specified by the analog input channel specification register (ADS). A/D conversion is performed on the analog input channels in order, starting with that specified by scan 0.

<3> A/D conversion is sequentially performed on the four analog input channels, the conversion results are stored in the A/D conversion result register (ADCR, ADCRH) each time conversion ends, and the A/D conversion end interrupt request signal (INTAD) is generated.

<4> After A/D conversion of the four channels ends, the ADCS bit is automatically cleared to 0, and the system enters the A/D conversion standby status.

<5> When ADCS is overwritten with 1 during conversion operation, the current A/D conversion is interrupted, and conversion restarts at the first channel. The partially converted data is discarded.

<6> When the value of the ADS register is rewritten or overwritten during conversion operation, the current A/D conversion is interrupted, and A/D conversion is performed on the first channel respecified by the ADS register. The partially converted data is discarded.

<7> When ADCS is cleared to 0 during conversion operation, the current A/D conversion is interrupted, and the system enters the A/D conversion standby status.

<8> When ADCE is cleared to 0 while in the A/D conversion standby status, the A/D converter enters the stop status. When ADCE = 0, specifying 1 for ADCS is ignored and A/D conversion does not start. In addition, A/D conversion does not start even if a hardware trigger is input while in the A/D conversion standby status.

Figure 12-20. Example of Software Trigger Mode (Scan Mode, One-Shot Conversion Mode) Operation Timing

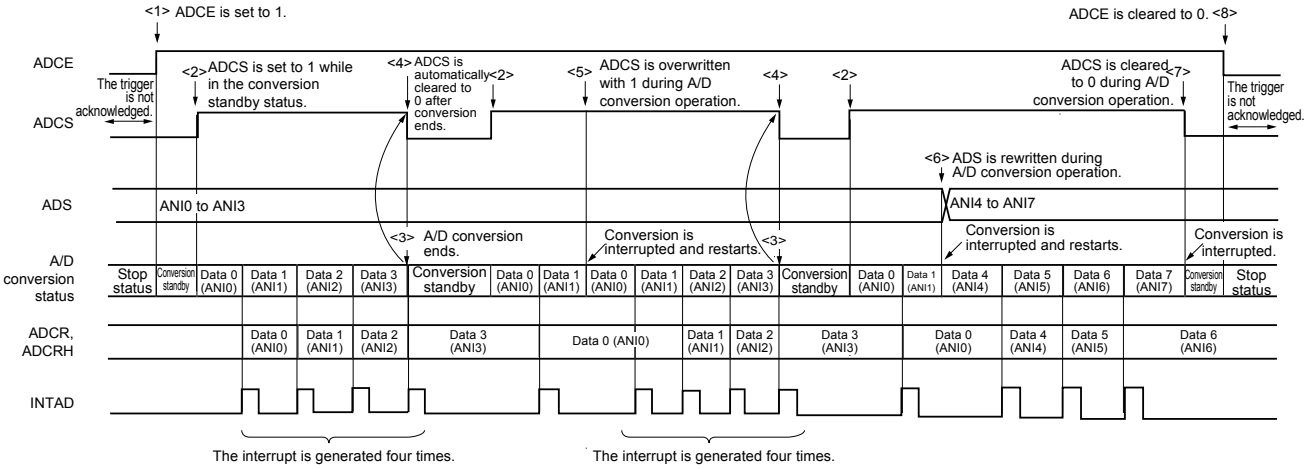

12.6.5 Hardware trigger no-wait mode (select mode, sequential conversion mode)

<1> In the stop status, the ADCE bit of A/D converter mode register 0 (ADM0) is set to 1, and the system enters the A/D conversion standby status.

<2> After the software counts up to the stabilization wait time (1 μs), the ADCS bit of the ADM0 register is set to 1 to place the system in the hardware trigger standby status (and conversion does not start at this stage). Note that, while in this status, A/D conversion does not start even if ADCS is set to 1.

<3> If a hardware trigger is input while ADCS = 1, A/D conversion is performed on the analog input specified by the analog input channel specification register (ADS).

<4> When A/D conversion ends, the conversion result is stored in the A/D conversion result register (ADCR, ADCRH), and the A/D conversion end interrupt request signal (INTAD) is generated. After A/D conversion ends, the next A/D conversion immediately starts.

<5> If a hardware trigger is input during conversion operation, the current A/D conversion is interrupted, and conversion restarts. The partially converted data is discarded.

<6> When the value of the ADS register is rewritten or overwritten during conversion operation, the current A/D conversion is interrupted, and A/D conversion is performed on the analog input respecified by the ADS register. The partially converted data is discarded.

<7> When ADCS is overwritten with 1 during conversion operation, the current A/D conversion is interrupted, and conversion restarts. The partially converted data is discarded.

<8> When ADCS is cleared to 0 during conversion operation, the current A/D conversion is interrupted, and the system enters the A/D conversion standby status. However, the A/D converter does not stop in this status.

<9> When ADCE is cleared to 0 while in the A/D conversion standby status, the A/D converter enters the stop status. When ADCS = 0, inputting a hardware trigger is ignored and A/D conversion does not start.

Figure 12-21. Example of Hardware Trigger No-Wait Mode (Select mode, Sequential Conversion Mode) Operation Timing

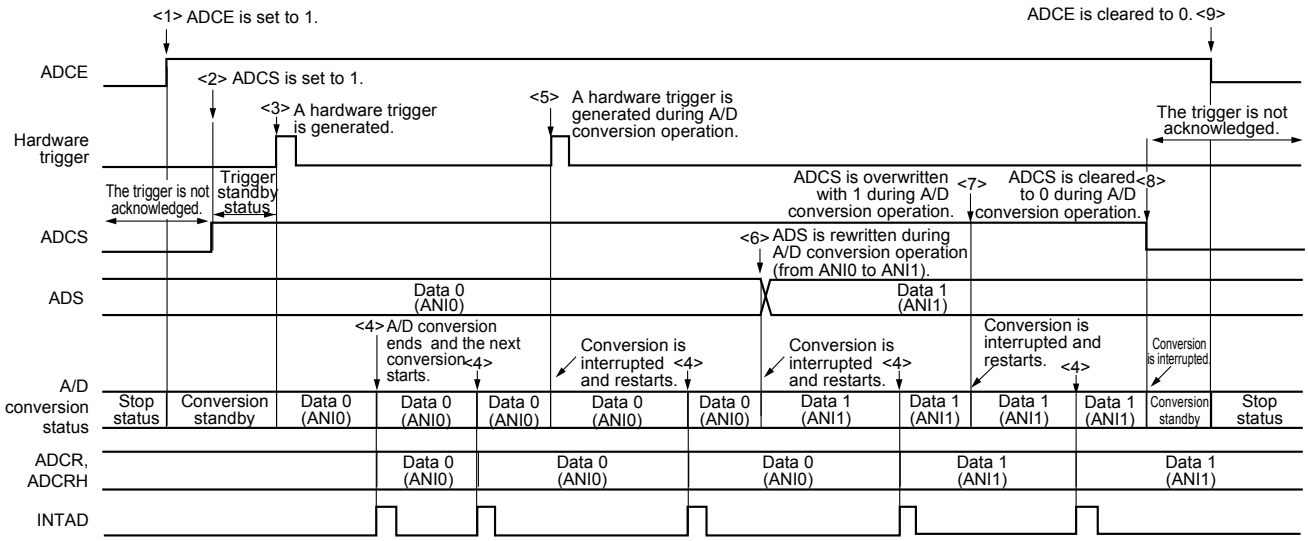

12.6.6 Hardware trigger no-wait mode (select mode, one-shot conversion mode)

<1> In the stop status, the ADCE bit of A/D converter mode register 0 (ADM0) is set to 1, and the system enters the A/D conversion standby status.

<2> After the software counts up to the stabilization wait time (1 μs), the ADCS bit of the ADM0 register is set to 1 to place the system in the hardware trigger standby status (and conversion does not start at this stage). Note that, while in this status, A/D conversion does not start even if ADCS is set to 1.

<3> If a hardware trigger is input while ADCS = 1, A/D conversion is performed on the analog input specified by the analog input channel specification register (ADS).

<4> When A/D conversion ends, the conversion result is stored in the A/D conversion result register (ADCR, ADCRH), and the A/D conversion end interrupt request signal (INTAD) is generated.

<5> After A/D conversion ends, the ADCS bit remains set to 1, and the system enters the A/D conversion standby status.

<6> If a hardware trigger is input during conversion operation, the current A/D conversion is interrupted, and conversion restarts. The partially converted data is discarded.

<7> When the value of the ADS register is rewritten or overwritten during conversion operation, the current A/D conversion is interrupted, and A/D conversion is performed on the analog input respecified by the ADS register. The partially converted data is discarded.

<8> When ADCS is overwritten with 1 during conversion operation, the current A/D conversion is interrupted, and conversion restarts. The partially converted data is discarded.

<9> When ADCS is cleared to 0 during conversion operation, the current A/D conversion is interrupted, and the system enters the A/D conversion standby status. However, the A/D converter does not stop in this status.

<10> When ADCE is cleared to 0 while in the A/D conversion standby status, the A/D converter enters the stop status. When ADCS = 0, inputting a hardware trigger is ignored and A/D conversion does not start.

Figure 12-22. Example of Hardware Trigger No-Wait Mode (Select mode, One-Shot Conversion Mode) Operation Timing

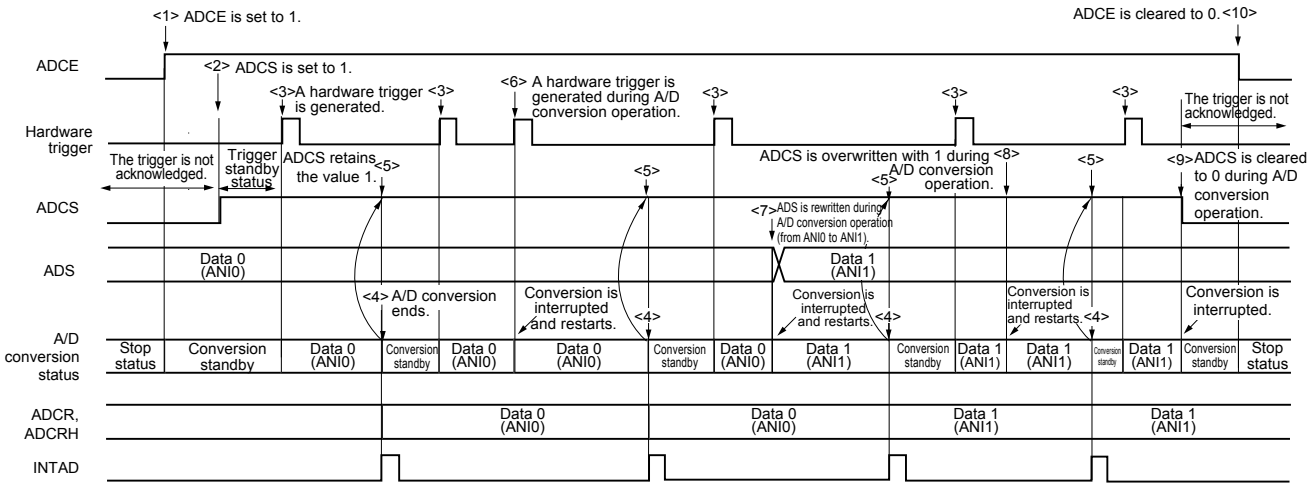

12.6.7 Hardware trigger no-wait mode (scan mode, sequential conversion mode)

<1> In the stop status, the ADCE bit of A/D converter mode register 0 (ADM0) is set to 1, and the system enters the A/D conversion standby status.

<2> After the software counts up to the stabilization wait time (1 μs), the ADCS bit of the ADM0 register is set to 1 to place the system in the hardware trigger standby status (and conversion does not start at this stage). Note that, while in this status, A/D conversion does not start even if ADCS is set to 1.

<3> If a hardware trigger is input while ADCS = 1, A/D conversion is performed on the four analog input channels specified by scan 0 to scan 3, which are specified by the analog input channel specification register (ADS). A/D conversion is performed on the analog input channels in order, starting with that specified by scan 0.

<4> A/D conversion is sequentially performed on the four analog input channels, the conversion results are stored in the A/D conversion result register (ADCR, ADCRH) each time conversion ends, and the A/D conversion end interrupt request signal (INTAD) is generated. After A/D conversion of the four channels ends, the A/D conversion of the channel following the specified channel automatically starts.

<5> If a hardware trigger is input during conversion operation, the current A/D conversion is interrupted, and conversion restarts at the first channel. The partially converted data is discarded.

<6> When the value of the ADS register is rewritten or overwritten during conversion operation, the current A/D conversion is interrupted, and A/D conversion is performed on the first channel respecified by the ADS register. The partially converted data is discarded.

<7> When ADCS is overwritten with 1 during conversion operation, the current A/D conversion is interrupted, and conversion restarts. The partially converted data is discarded.

<8> When ADCS is cleared to 0 during conversion operation, the current A/D conversion is interrupted, and the system enters the A/D conversion standby status. However, the A/D converter does not stop in this status.

<9> When ADCE is cleared to 0 while in the A/D conversion standby status, the A/D converter enters the stop status. When ADCE = 0, specifying 1 for ADCS is ignored and A/D conversion does not start.

Figure 12-23. Example of Hardware Trigger No-Wait Mode (Scan Mode, Sequential Conversion Mode) Operation Timing

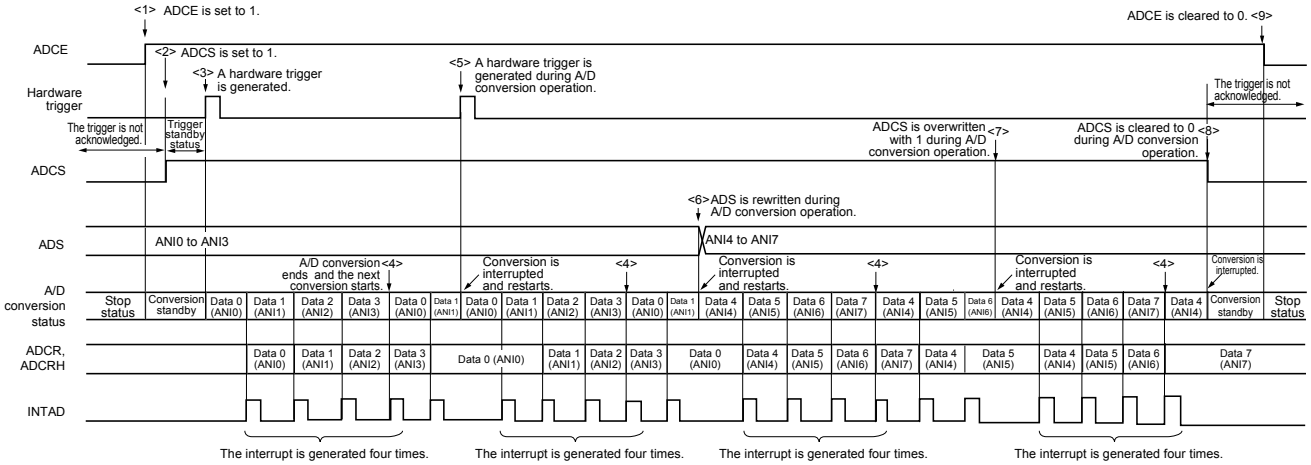

12.6.8 Hardware trigger no-wait mode (scan mode, one-shot conversion mode)

<1> In the stop status, the ADCE bit of A/D converter mode register 0 (ADM0) is set to 1, and the system enters the A/D conversion standby status.

<2> After the software counts up to the stabilization wait time (1 μs), the ADCS bit of the ADM0 register is set to 1 to place the system in the hardware trigger standby status (and conversion does not start at this stage). Note that, while in this status, A/D conversion does not start even if ADCS is set to 1.

<3> If a hardware trigger is input while ADCS = 1, A/D conversion is performed on the four analog input channels specified by scan 0 to scan 3, which are specified by the analog input channel specification register (ADS). A/D conversion is performed on the analog input channels in order, starting with that specified by scan 0.

<4> A/D conversion is sequentially performed on the four analog input channels, the conversion results are stored in the A/D conversion result register (ADCR, ADCRH) each time conversion ends, and the A/D conversion end interrupt request signal (INTAD) is generated.

<5> After A/D conversion of the four channels ends, the ADCS bit remains set to 1, and the system enters the A/D conversion standby status.

<6> If a hardware trigger is input during conversion operation, the current A/D conversion is interrupted, and conversion restarts at the first channel. The partially converted data is discarded.

<7> When the value of the ADS register is rewritten or overwritten during conversion operation, the current A/D conversion is interrupted, and A/D conversion is performed on the first channel respecified by the ADS register. The partially converted data is discarded.

<8> When ADCS is overwritten with 1 during conversion operation, the current A/D conversion is interrupted, and conversion restarts at the first channel. The partially converted data is discarded.

<9> When ADCS is cleared to 0 during conversion operation, the current A/D conversion is interrupted, and the system enters the A/D conversion standby status. However, the A/D converter does not stop in this status.

<10> When ADCE is cleared to 0 while in the A/D conversion standby status, the A/D converter enters the stop status. When ADCS = 0, inputting a hardware trigger is ignored and A/D conversion does not start.

Figure 12-24. Example of Hardware Trigger No-Wait Mode (Scan Mode, One-Shot Conversion Mode) Operation Timing

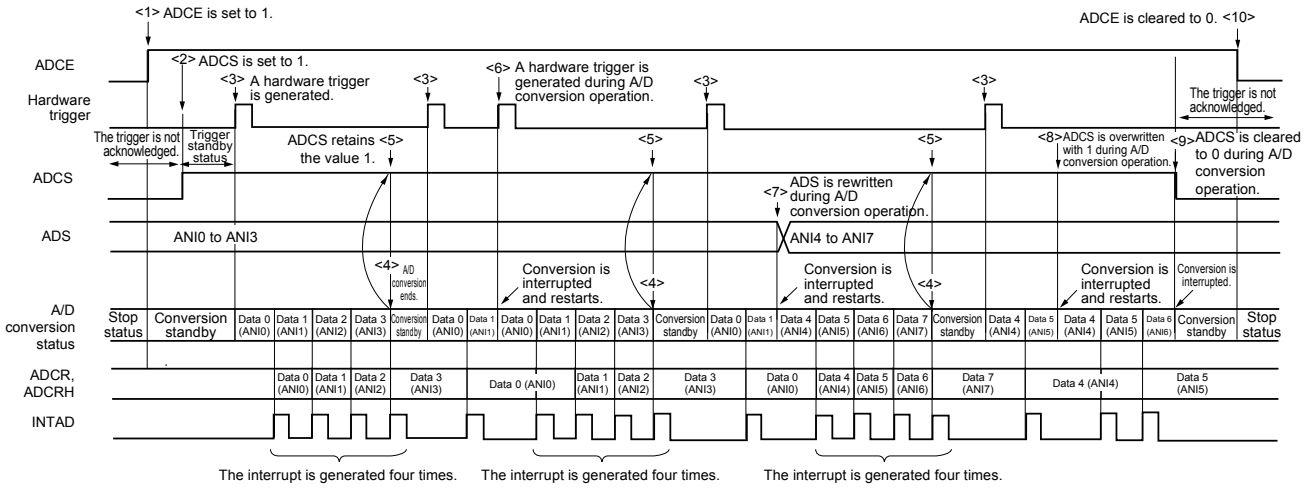

12.6.9 Hardware trigger wait mode (select mode, sequential conversion mode)

<1> In the stop status, the ADCE bit of A/D converter mode register 0 (ADM0) is set to 1, and the system enters the hardware trigger standby status.

<2> If a hardware trigger is input while in the hardware trigger standby status, A/D conversion is performed on the analog input specified by the analog input channel specification register (ADS). The ADCS bit of the ADM0 register is automatically set to 1 according to the hardware trigger input.

<3> When A/D conversion ends, the conversion result is stored in the A/D conversion result register (ADCR, ADCRH), and the A/D conversion end interrupt request signal (INTAD) is generated. After A/D conversion ends, the next A/D conversion immediately starts. (At this time, no hardware trigger is necessary.)

<4> If a hardware trigger is input during conversion operation, the current A/D conversion is interrupted, and conversion restarts. The partially converted data is discarded.

<5> When the value of the ADS register is rewritten or overwritten during conversion operation, the current A/D conversion is interrupted, and A/D conversion is performed on the analog input respecified by the ADS register. The partially converted data is discarded.

<6> When ADCS is overwritten with 1 during conversion operation, the current A/D conversion is interrupted, and conversion restarts. The partially converted data is discarded.

<7> When ADCS is cleared to 0 during conversion operation, the current A/D conversion is interrupted, the system enters the hardware trigger standby status, and the A/D converter enters the stop status. When ADCE = 0, inputting a hardware trigger is ignored and A/D conversion does not start.

Figure 12-25. Example of Hardware Trigger Wait Mode (Select mode, Sequential Conversion Mode) Operation Timing

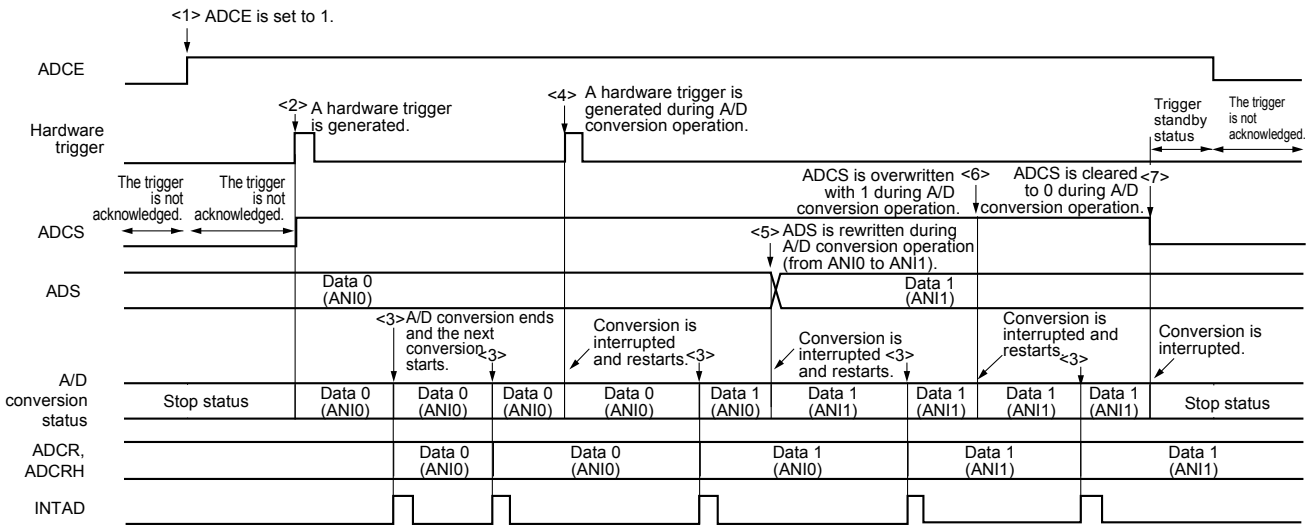

12.6.10 Hardware trigger wait mode (select mode, one-shot conversion mode)

<1> In the stop status, the ADCE bit of A/D converter mode register 0 (ADM0) is set to 1, and the system enters the hardware trigger standby status.

<2> If a hardware trigger is input while in the hardware trigger standby status, A/D conversion is performed on the analog input specified by the analog input channel specification register (ADS). The ADCS bit of the ADM0 register is automatically set to 1 according to the hardware trigger input.

<3> When A/D conversion ends, the conversion result is stored in the A/D conversion result register (ADCR, ADCRH), and the A/D conversion end interrupt request signal (INTAD) is generated.

<4> After A/D conversion ends, the ADCS bit is automatically cleared to 0, and the A/D converter enters the stop status.

<5> If a hardware trigger is input during conversion operation, the current A/D conversion is interrupted, and conversion restarts. The partially converted data is discarded.

<6> When the value of the ADS register is rewritten or overwritten during conversion operation, the current A/D conversion is interrupted, and A/D conversion is performed on the analog input respecified by the ADS register. The partially converted data is discarded.

<7> When ADCS is overwritten with 1 during conversion operation, the current A/D conversion is interrupted, and conversion restarts. The partially converted data is initialized.

<8> When ADCS is cleared to 0 during conversion operation, the current A/D conversion is interrupted, the system enters the hardware trigger standby status, and the A/D converter enters the stop status. When ADCE = 0, inputting a hardware trigger is ignored and A/D conversion does not start.

Figure 12-26. Example of Hardware Trigger Wait Mode (Select mode, One-Shot Conversion Mode) Operation Timing

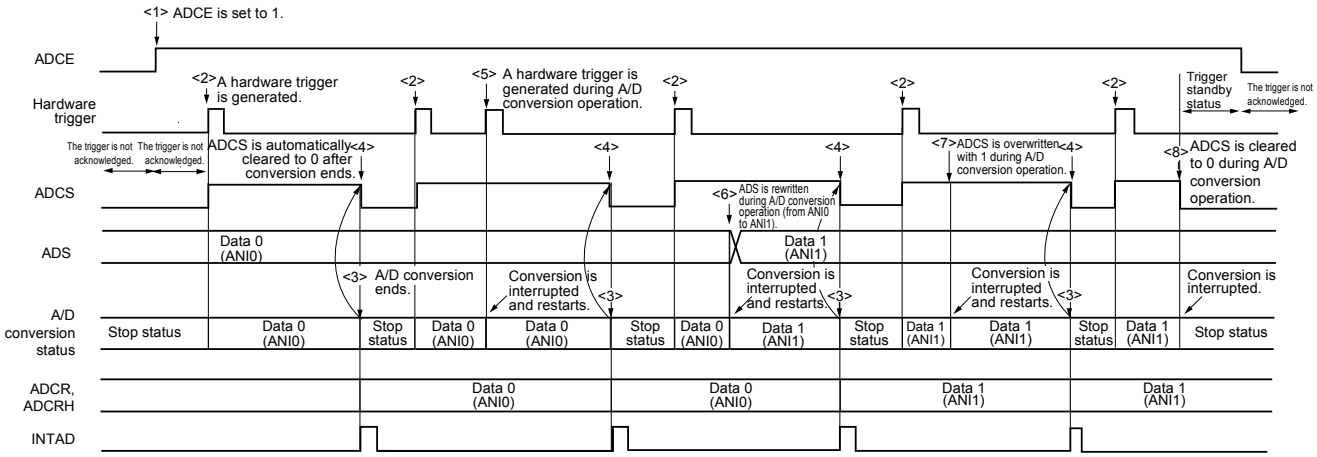

12.6.11 Hardware trigger wait mode (scan mode, sequential conversion mode)

<1> In the stop status, the ADCE bit of A/D converter mode register 0 (ADM0) is set to 1, and the system enters the A/D conversion standby status.

<2> If a hardware trigger is input while in the hardware trigger standby status, A/D conversion is performed on the four analog input channels specified by scan 0 to scan 3, which are specified by the analog input channel specification register (ADS). The ADCS bit of the ADM0 register is automatically set to 1 according to the hardware trigger input. A/D conversion is performed on the analog input channels in order, starting with that specified by scan 0.

<3> A/D conversion is sequentially performed on the four analog input channels, the conversion results are stored in the A/D conversion result register (ADCR, ADCRH) each time conversion ends, and the A/D conversion end interrupt request signal (INTAD) is generated. After A/D conversion of the four channels ends, the A/D conversion of the channel following the specified channel automatically starts.

<4> If a hardware trigger is input during conversion operation, the current A/D conversion is interrupted, and conversion restarts at the first channel. The partially converted data is discarded.

<5> When the value of the ADS register is rewritten or overwritten during conversion operation, the current A/D conversion is interrupted, and A/D conversion is performed on the first channel respecified by the ADS register. The partially converted data is discarded.

<6> When ADCS is overwritten with 1 during conversion operation, the current A/D conversion is interrupted, and conversion restarts. The partially converted data is discarded.

<7> When ADCS is cleared to 0 during conversion operation, the current A/D conversion is interrupted, the system enters the hardware trigger standby status, and the A/D converter enters the stop status. When ADCE = 0, inputting a hardware trigger is ignored and A/D conversion does not start.

Figure 12-27. Example of Hardware Trigger Wait Mode (Scan Mode, Sequential Conversion Mode) Operation Timing

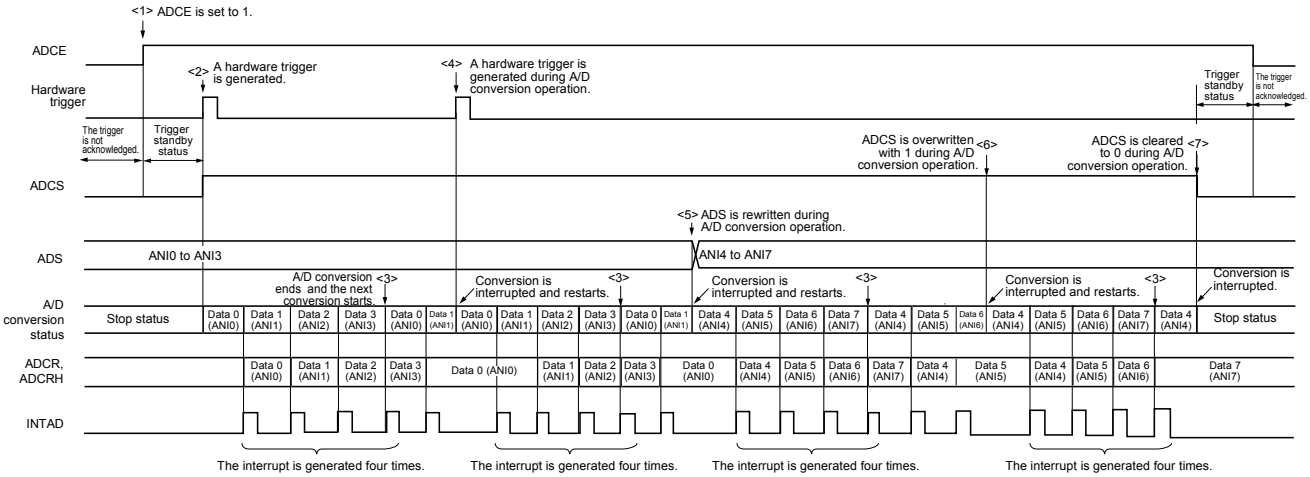

12.6.12 Hardware trigger wait mode (scan mode, one-shot conversion mode)

<1> In the stop status, the ADCE bit of A/D converter mode register 0 (ADM0) is set to 1, and the system enters the A/D conversion standby status.

<2> If a hardware trigger is input while in the hardware trigger standby status, A/D conversion is performed on the four analog input channels specified by scan 0 to scan 3, which are specified by the analog input channel specification register (ADS). The ADCS bit of the ADM0 register is automatically set to 1 according to the hardware trigger input. A/D conversion is performed on the analog input channels in order, starting with that specified by scan 0.

<3> A/D conversion is sequentially performed on the four analog input channels, the conversion results are stored in the A/D conversion result register (ADCR, ADCRH) each time conversion ends, and the A/D conversion end interrupt request signal (INTAD) is generated.

<4> After A/D conversion ends, the ADCS bit is automatically cleared to 0, and the A/D converter enters the stop status.

<5> If a hardware trigger is input during conversion operation, the current A/D conversion is interrupted, and conversion restarts at the first channel. The partially converted data is discarded.

<6> When the value of the ADS register is rewritten or overwritten during conversion operation, the current A/D conversion is interrupted, and A/D conversion is performed on the first channel respecified by the ADS register. The partially converted data is discarded.

<7> When ADCS is overwritten with 1 during conversion operation, the current A/D conversion is interrupted, and conversion restarts. The partially converted data is discarded.

<8> When ADCS is cleared to 0 during conversion operation, the current A/D conversion is interrupted, the system enters the hardware trigger standby status, and the A/D converter enters the stop status. When ADCE = 0, inputting a hardware trigger is ignored and A/D conversion does not start.

Figure 12-28. Example of Hardware Trigger Wait Mode (Scan Mode, One-Shot Conversion Mode) Operation Timing

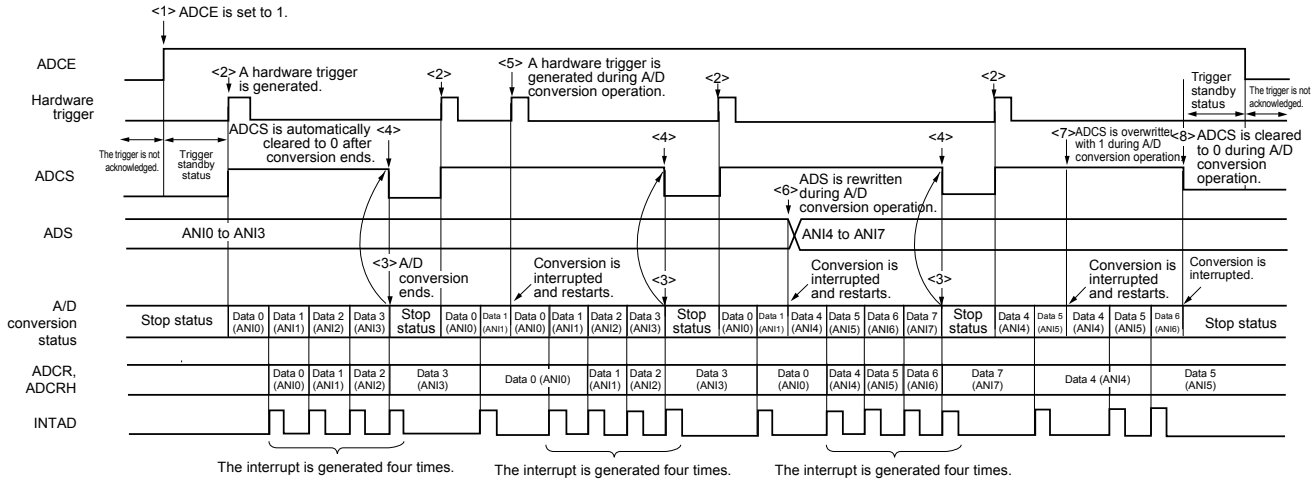

12.7 A/D Converter Setup Flowchart

The A/D converter setup flowchart in each operation mode is described below.

12.7.1 Setting up software trigger mode

Figure 12-29. Setting up Software Trigger Mode

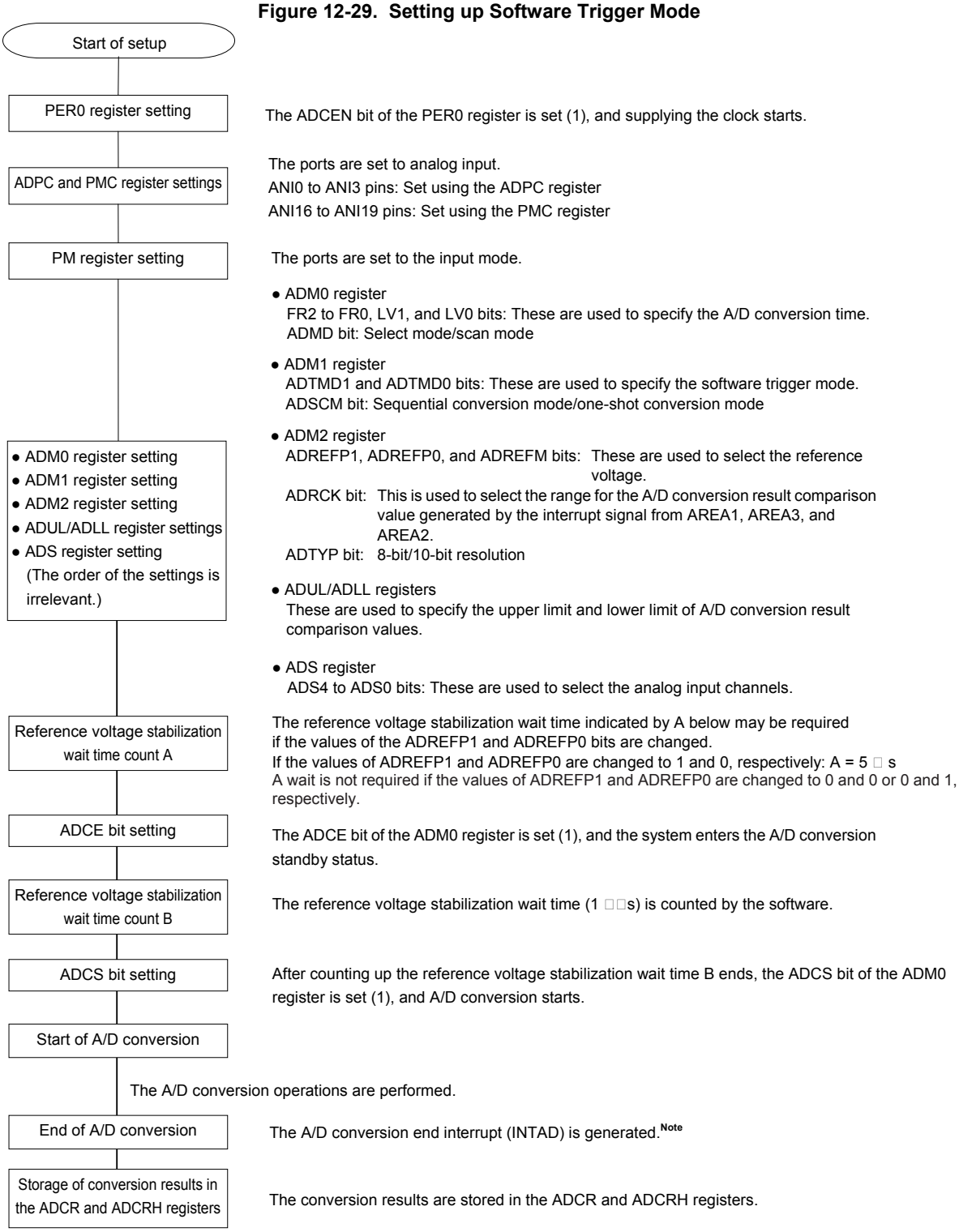

Note Depending on the settings of the ADRCK bit and ADUL/ADLL registers, there is a possibility of no interrupt signal being generated. In this case, the results are not stored in the ADCR and ADCRH registers.

12.7.2 Setting up hardware trigger no-wait mode

Figure 12-30. Setting up Hardware Trigger No-Wait Mode

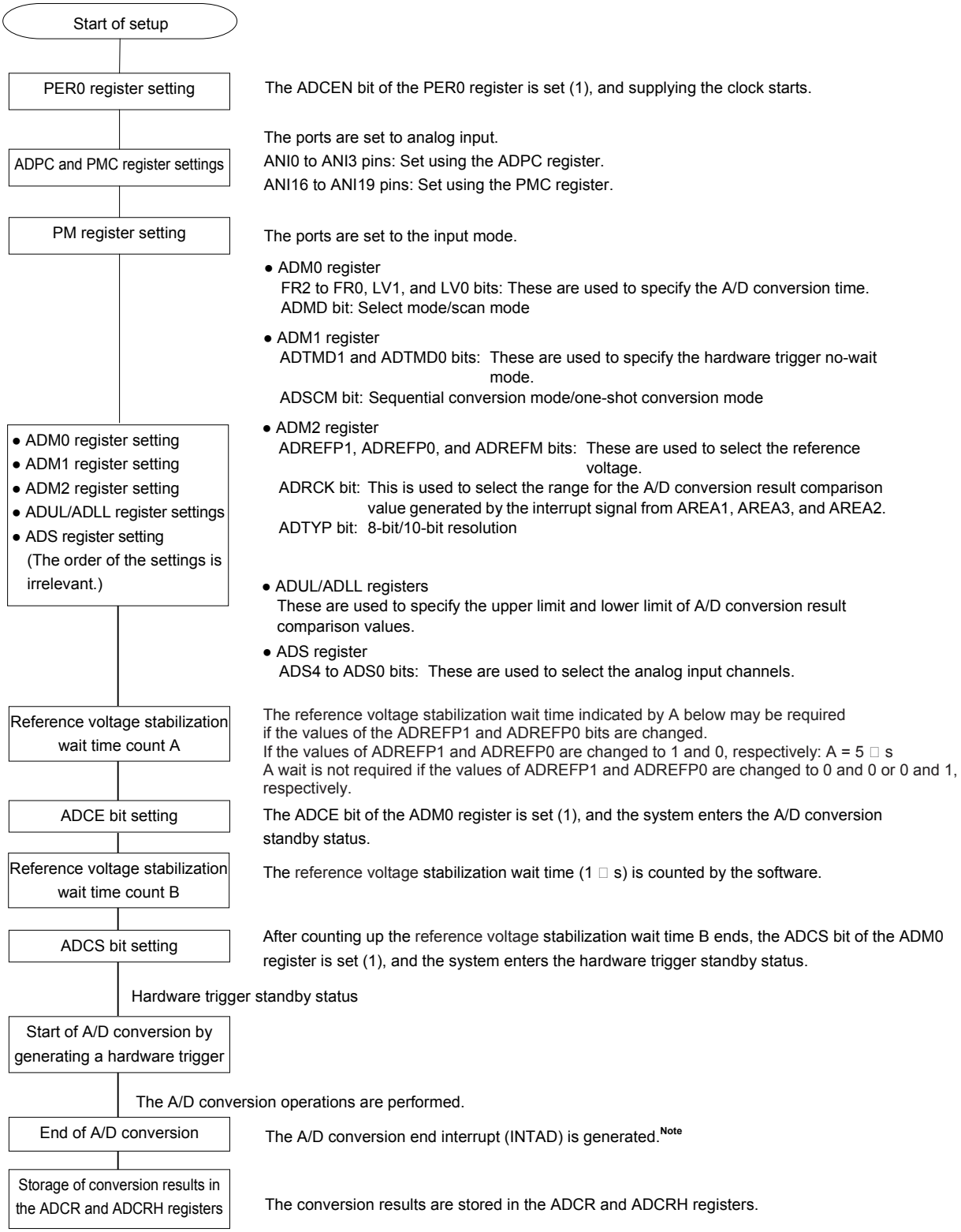

Note Depending on the settings of the ADRCK bit and ADUL/ADLL registers, there is a possibility of no interrupt signal being generated. In this case, the results are not stored in the ADCR and ADCRH registers.

12.7.3 Setting up hardware trigger wait mode

Figure 12-31. Setting up Hardware Trigger Wait Mode

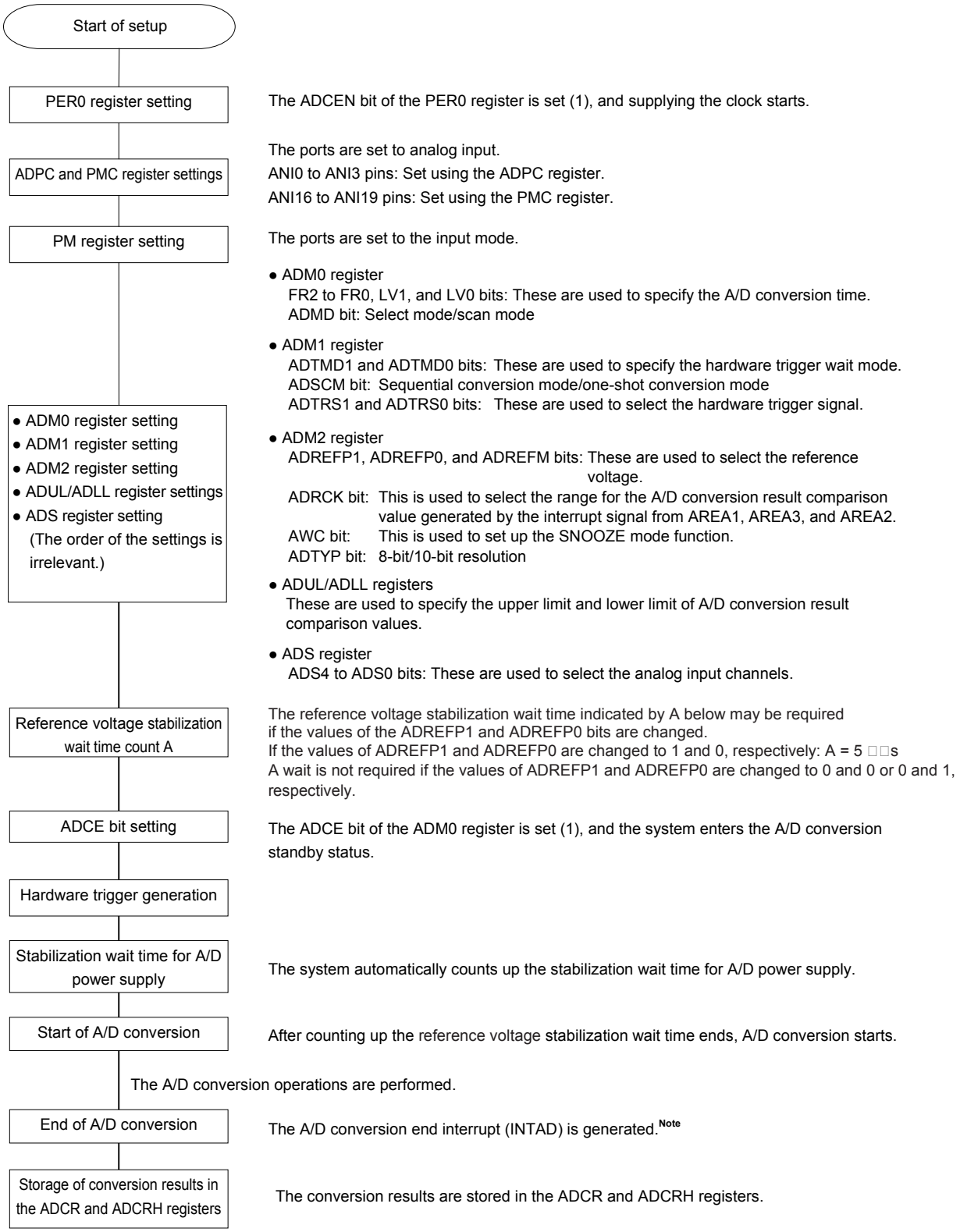

Note Depending on the settings of the ADRCK bit and ADUL/ADLL registers, there is a possibility of no interrupt signal being generated. In this case, the results are not stored in the ADCR and ADCRH registers.

12.7.4 Setup when temperature sensor output/internal reference voltage output is selected (example for software trigger mode and one-shot conversion mode)

Figure 12-32. Setup when temperature sensor output/internal reference voltage output is selected

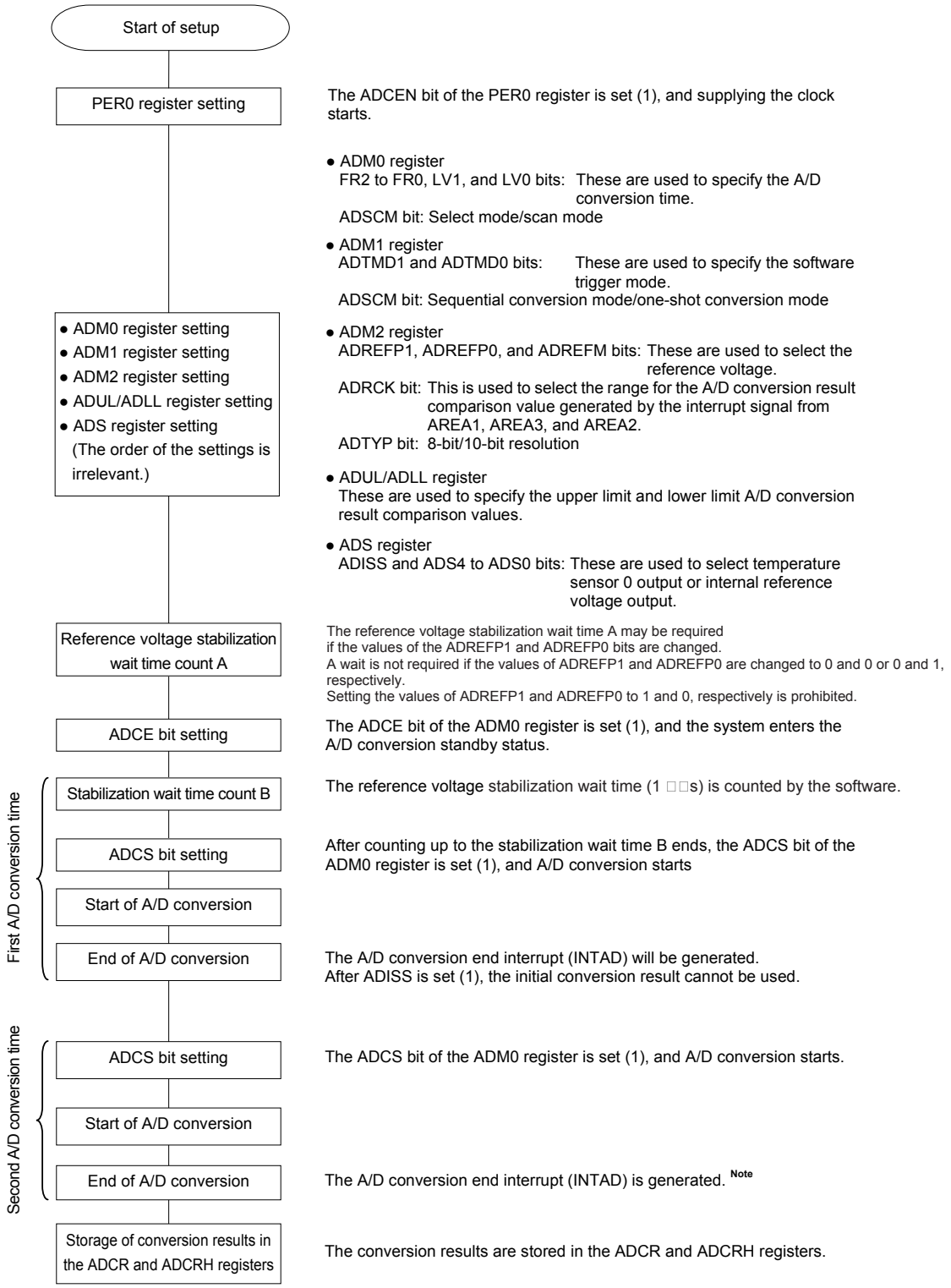

Note Depending on the settings of the ADRCK bit and ADUL/ADLL registers, there is a possibility of no interrupt signal being generated. In this case, the results are not stored in the ADCR and ADCRH registers.

Caution This setting can be used only in HS (high-speed main) mode.

12.7.5 Setting up test mode

Figure 12-33. Setting up Test Trigger Mode

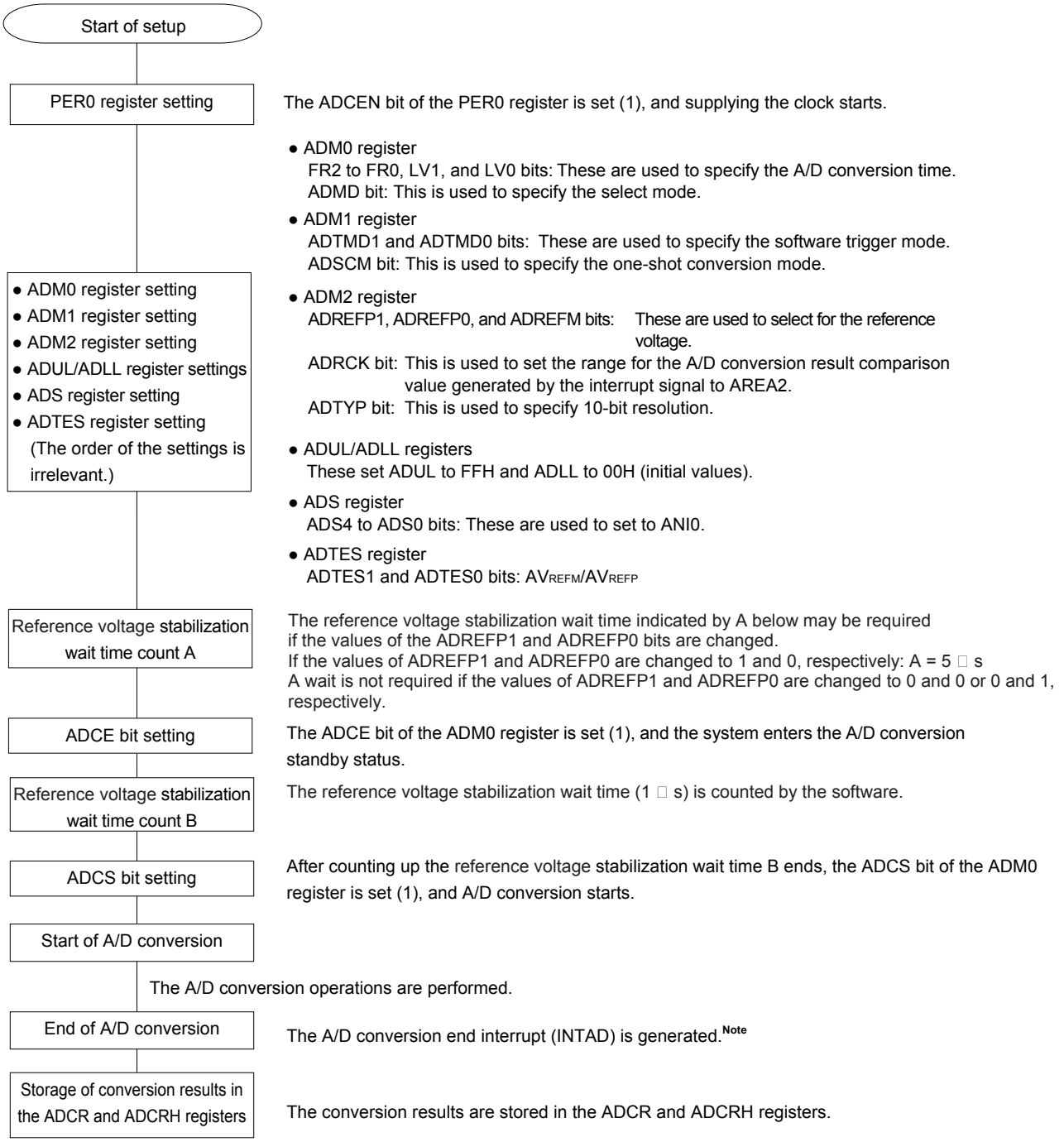

Note Depending on the settings of the ADRCK bit and ADUL/ADLL registers, there is a possibility of no interrupt signal being generated. In this case, the results are not stored in the ADCR and ADCRH registers.

Caution For the procedure for testing the A/D converter, see 23.3.8 A/D test function.

12.8 SNOOZE Mode Function

In the SNOOZE mode, A/D conversion is triggered by inputting a hardware trigger in the STOP mode. Normally, A/D conversion is stopped while in the STOP mode, but, by using the SNOOZE mode, A/D conversion can be performed without operating the CPU by inputting a hardware trigger. This is effective for reducing the operating current.

If the A/D conversion result range is specified using the ADUL and ADLL registers, A/D conversion results can be judged at a certain interval of time in SNOOZE mode. Using this function enables power supply voltage monitoring and input key judgment based on A/D inputs.

In the SNOOZE mode, only the following two conversion modes can be used:

- Hardware trigger wait mode (select mode, one-shot conversion mode)
- Hardware trigger wait mode (scan mode, one-shot conversion mode)

Caution That the SNOOZE mode can only be specified when the high-speed on-chip oscillator clock is selected for f_{CLK}.

Figure 12-34. Block Diagram When Using SNOOZE Mode Function

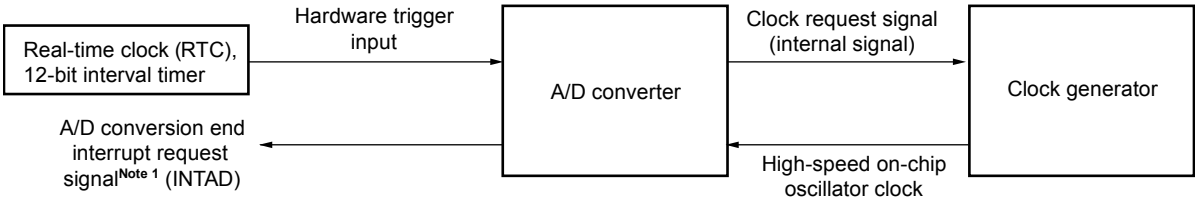

When using the SNOOZE mode function, the initial setting of each register is specified before switching to the STOP mode (for details about these settings, see **12.7.3 Setting up hardware trigger wait mode** Note 2). Just before move to STOP mode, bit 2 (AWC) of A/D converter mode register 2 (ADM2) is set to 1. After the initial settings are specified, bit 0 (ADCE) of A/D converter mode register 0 (ADM0) is set to 1.

If a hardware trigger is input after switching to the STOP mode, the high-speed on-chip oscillator clock is supplied to the A/D converter. After supplying this clock, the system automatically counts up to the A/D power supply stabilization wait time, and then A/D conversion starts.

The SNOOZE mode operation after A/D conversion ends differs depending on whether an interrupt signal is generated Note 1.

Notes 1. Depending on the setting of the A/D conversion result comparison function (ADRCK bit, ADUL/ADLL register), there is a possibility of no interrupt signal being generated.

2. Be sure to set the ADM1 register to E2H or E3H.

Remark The hardware trigger is INTRTC or INTIT.
Specify the hardware trigger by using the A/D Converter Mode Register 1 (ADM1).

(1) If an interrupt is generated after A/D conversion ends

If the A/D conversion result value is inside the range of values specified by the A/D conversion result comparison function (which is set up by using the ADRCK bit and ADUL/ADLL register), the A/D conversion end interrupt request signal (INTAD) is generated.

· While in the select mode

When A/D conversion ends and an A/D conversion end interrupt request signal (INTAD) is generated, the A/D converter returns to normal operation mode from SNOOZE mode. At this time, be sure to clear bit 2 (AWC = 0: SNOOZE mode release) of the A/D converter mode register 2 (ADM2). If the AWC bit is left set to 1, A/D conversion will not start normally in the subsequent SNOOZE or normal operation mode.

· While in the scan mode

If even one A/D conversion end interrupt request signal (INTAD) is generated during A/D conversion of the four channels, the clock request signal remains at the high level, and the A/D converter switches from the SNOOZE mode to the normal operation mode. At this time, be sure to clear bit 2 (AWC = 0: SNOOZE mode release) of A/D converter mode register 2 (ADM2) to 0. If the AWC bit is left set to 1, A/D conversion will not start normally in the subsequent SNOOZE or normal operation mode.

Figure 12-35. Operation Example When Interrupt Is Generated After A/D Conversion Ends (While in Scan Mode)

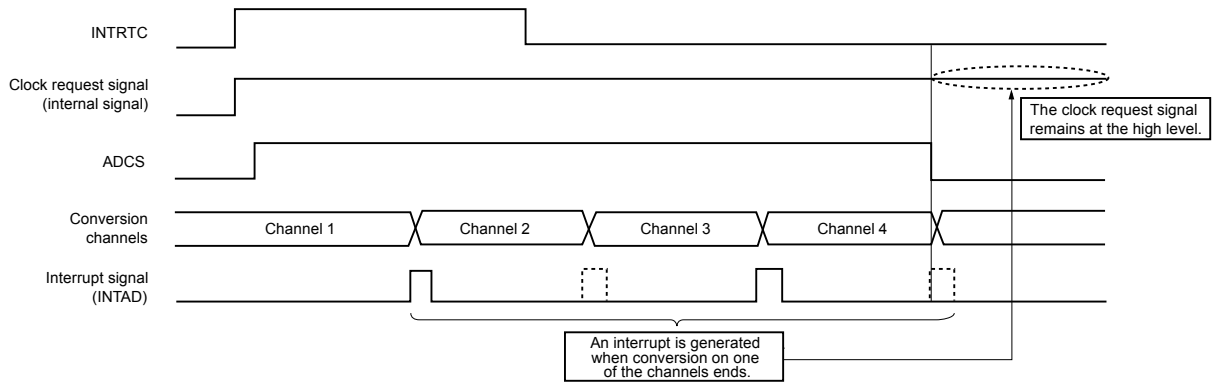

(2) If no interrupt is generated after A/D conversion ends

If the A/D conversion result value is outside the range of values specified by the A/D conversion result comparison function (which is set up by using the ADRCK bit and ADUL/ADLL register), the A/D conversion end interrupt request signal (INTAD) is not generated.

· While in the select mode

If the A/D conversion end interrupt request signal (INTAD) is not generated after A/D conversion ends, the clock request signal (an internal signal) is automatically set to the low level, and supplying the high-speed on-chip oscillator clock stops. If a hardware trigger is input later, A/D conversion work is again performed in the SNOOZE mode.

· While in the scan mode

If the A/D conversion end interrupt request signal (INTAD) is not generated even once during A/D conversion of the four channels, the clock request signal (an internal signal) is automatically set to the low level after A/D conversion of the four channels ends, and supplying the high-speed on-chip oscillator clock stops. If a hardware trigger is input later, A/D conversion work is again performed in the SNOOZE mode.

Figure 12-36. Operation Example When No Interrupt Is Generated After A/D Conversion Ends (While in Scan Mode)

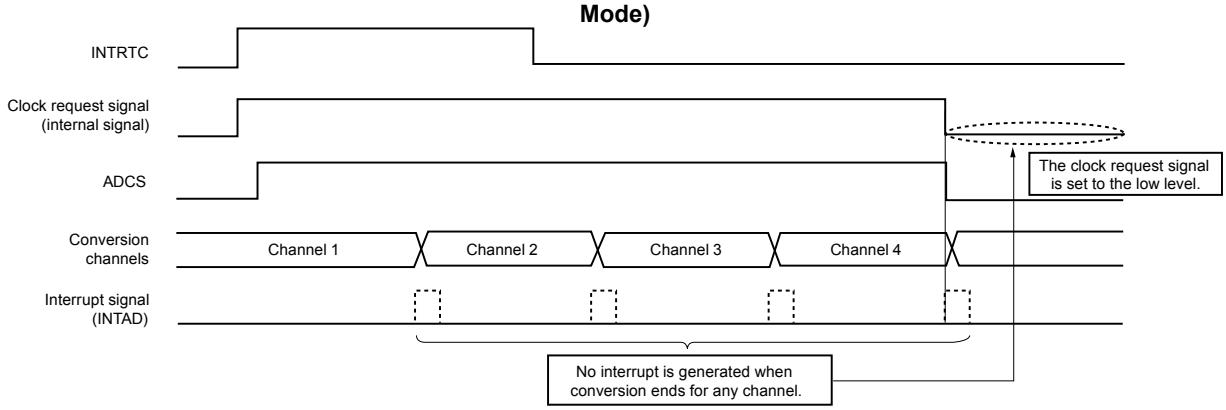

Figure 12-37. Flowchart for Setting up SNOOZE Mode

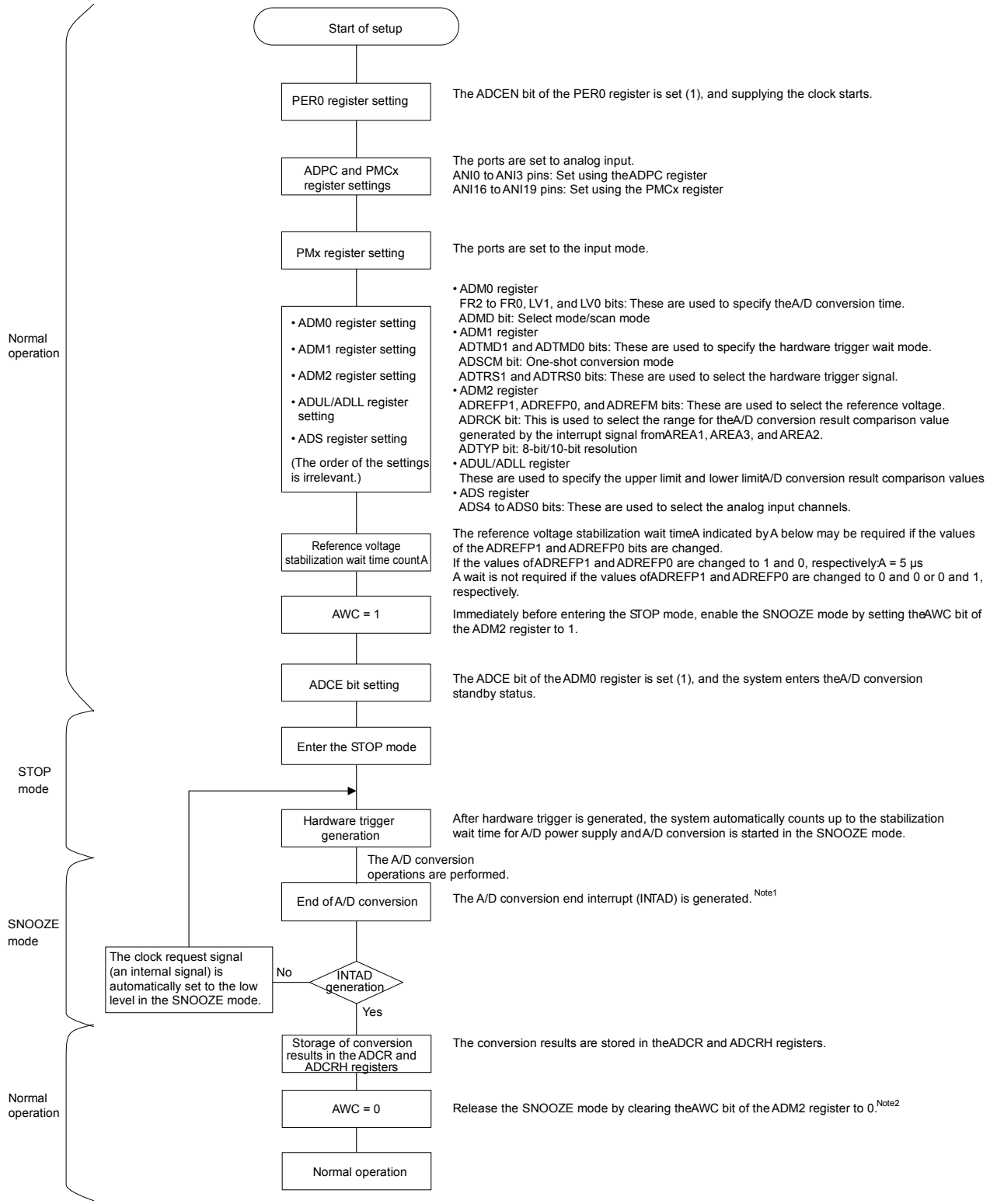

Notes 1. If the A/D conversion end interrupt request signal (INTAD) is not generated by setting ADRCK bit and ADUL/ADLL register, the result is not stored in the ADCR and ADCRH registers.
The system enters the STOP mode again. If a hardware trigger is input later, A/D conversion operation is again performed in the SNOOZE mode.

2. If the AWC bit is left set to 1, A/D conversion will not start normally in spite of the subsequent SNOOZE or normal operation mode. Be sure to clear the AWC bit to 0.

12.9 How to Read A/D Converter Characteristics Table

Here, special terms unique to the A/D converter are explained.

(1) Resolution

This is the minimum analog input voltage that can be identified. That is, the percentage of the analog input voltage per bit of digital output is called 1LSB (Least Significant Bit). The percentage of 1LSB with respect to the full scale is expressed by %FSR (Full Scale Range).

1LSB is as follows when the resolution is 10 bits.

$1LSB = 1/2^{10} = 1/1024$
$= 0.098\%FSR$

Accuracy has no relation to resolution, but is determined by overall error.

(2) Overall error

This shows the maximum error value between the actual measured value and the theoretical value.
Zero-scale error, full-scale error, integral linearity error, and differential linearity errors that are combinations of these express the overall error.
Note that the quantization error is not included in the overall error in the characteristics table.

(3) Quantization error

When analog values are converted to digital values, a ±1/2LSB error naturally occurs. In an A/D converter, an analog input voltage in a range of ±1/2LSB is converted to the same digital code, so a quantization error cannot be avoided.
Note that the quantization error is not included in the overall error, zero-scale error, full-scale error, integral linearity error, and differential linearity error in the characteristics table.

Figure 12-38. Overall Error

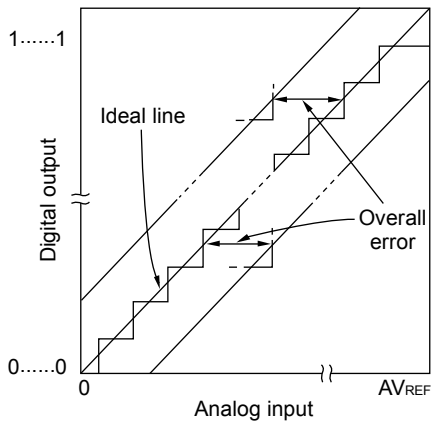

Figure 12-39. Quantization Error

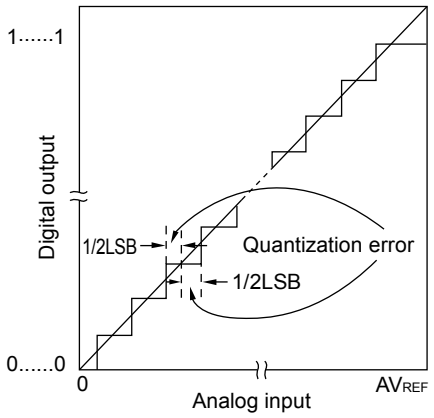

(4) Zero-scale error

This shows the difference between the actual measurement value of the analog input voltage and the theoretical value (1/2LSB) when the digital output changes from 0.....000 to 0.....001.
If the actual measurement value is greater than the theoretical value, it shows the difference between the actual measurement value of the analog input voltage and the theoretical value (3/2LSB) when the digital output changes from 0……001 to 0……010.

(5) Full-scale error

This shows the difference between the actual measurement value of the analog input voltage and the theoretical value (Full-scale – 3/2LSB) when the digital output changes from 1.....110 to 1.....111.

(6) Integral linearity error

This shows the degree to which the conversion characteristics deviate from the ideal linear relationship. It expresses the maximum value of the difference between the actual measurement value and the ideal straight line when the zero-scale error and full-scale error are 0.

(7) Differential linearity error

While the ideal width of code output is 1LSB, this indicates the difference between the actual measurement value and the ideal value.

Figure 12-40. Zero-Scale Error

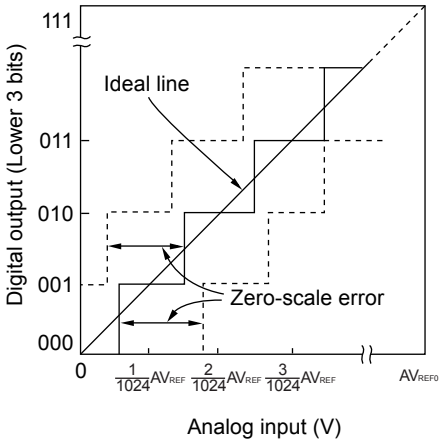

Figure 12-41. Full-Scale Error

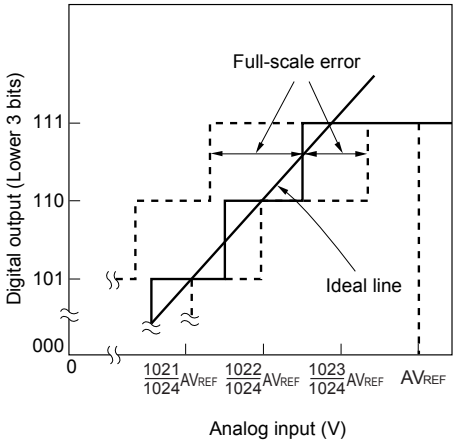

Figure 12-42. Integral Linearity Error

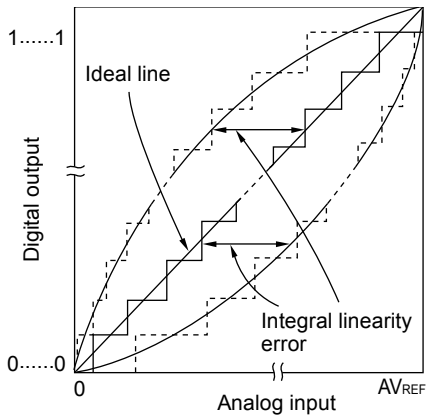

Figure 12-43. Differential Linearity Error

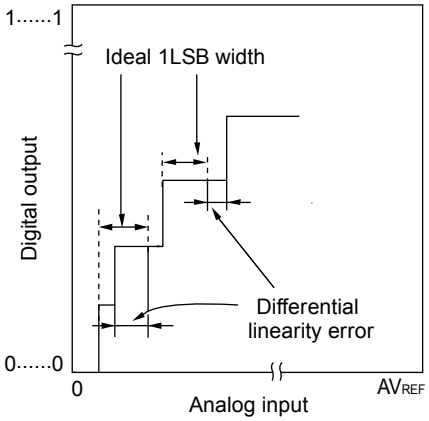

(8) Conversion time

This expresses the time from the start of sampling to when the digital output is obtained.

The sampling time is included in the conversion time in the characteristics table.

(9) Sampling time

This is the time the analog switch is turned on for the analog voltage to be sampled by the sample & hold circuit.

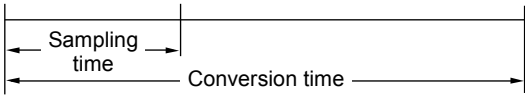

12.10 Cautions for A/D Converter

(1) Operating current in STOP mode

Shift to STOP mode after stopping the A/D converter (by setting bit 7 (ADCS) of A/D converter mode register 0 (ADM0) to 0). The operating current can be reduced by setting bit 0 (ADCE) of the ADM0 register to 0 at the same time.

To restart from the standby status, clear bit 0 (ADIF) of interrupt request flag register 1H (IF1H) to 0 and start operation.

(2) Input range of ANI0 to ANI3 and ANI16 to ANI19 pins

Observe the rated range of the ANI0 to ANI3 and ANI16 to ANI19 pins input voltage. If a voltage exceeding V_{DD} and AV_{REFP} or a voltage lower than V_{SS} and AV_{REFM} (even in the range of absolute maximum ratings) is input to an analog input channel, the converted value of that channel becomes undefined. In addition, the converted values of the other channels may also be affected.

When internal reference voltage (1.45 V) is selected reference voltage source for the + side of the A/D converter, do not input a voltage higher than the internal reference voltage (1.45 V) to a pin selected by the ADS register. However, it is no problem that a voltage higher than the internal reference voltage (1.45 V) is input to a pin not selected by the ADS register.

Caution Internal reference voltage (1.45 V) can be used only in HS (high-speed main) mode.

(3) Conflicting operations

<1> Conflict between the A/D conversion result register (ADCR, ADCRH) write and the ADCR or ADCRH register read by instruction upon the end of conversion

The ADCR or ADCRH register read has priority. After the read operation, the new conversion result is written to the ADCR or ADCRH registers.

<2> Conflict between the ADCR or ADCRH register write and the A/D converter mode register 0 (ADM0) write, the analog input channel specification register (ADS), or A/D port configuration register (ADPC) write upon the end of conversion

The ADM0, ADS, or ADPC registers write has priority. The ADCR or ADCRH register write is not performed, nor is the conversion end interrupt signal (INTAD) generated.

(4) Noise countermeasures

To maintain the 10-bit resolution, attention must be paid to noise input to the AV_{REFP}, V_{DD}, ANI0 to ANI3, and ANI16 to ANI19 pins.

<1> Connect a capacitor with a low equivalent resistance and a good frequency response (capacitance of about 0.01 μF) via the shortest possible run of relatively thick wiring to the power supply.

<2> The higher the output impedance of the analog input source, the greater the influence. To reduce the noise, connecting external capacitor as shown in **Figure 12-44** is recommended.

<3> Do not switch these pins with other pins during conversion.

<4> The accuracy is improved if the HALT mode is set immediately after the start of conversion.

Figure 12-44. Analog Input Pin Connection

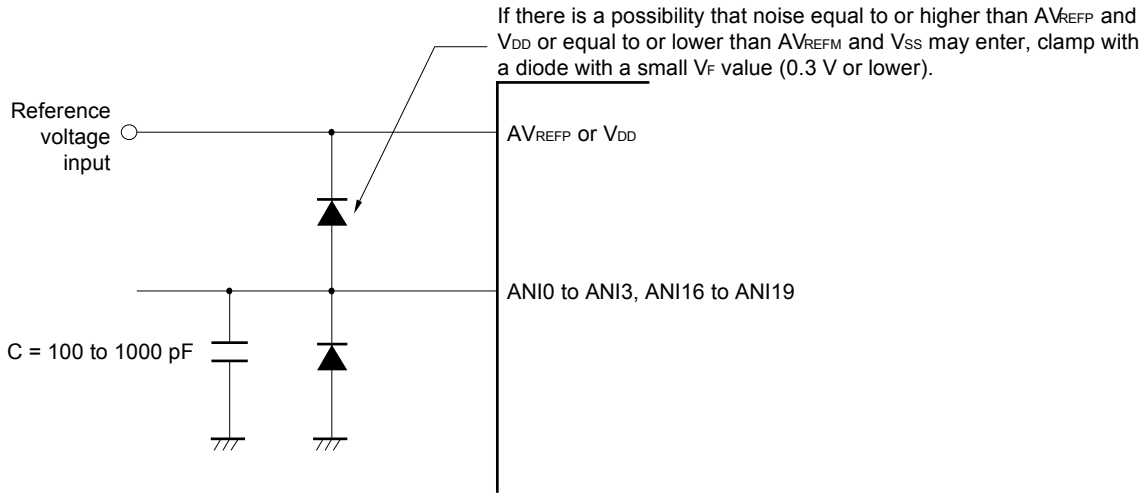

(5) Analog input (ANIn) pins

<1> The analog input pins (ANI0 to ANI3) are also used as input port pins (P20 to P23).
When A/D conversion is performed with any of the ANI0 to ANI3 pins selected, do not change to output value P20 to P23 while conversion is in progress; otherwise the conversion resolution may be degraded.

<2> If a pin adjacent to a pin that is being A/D converted is used as a digital I/O port pin, the A/D conversion result might differ from the expected value due to a coupling noise. Be sure to prevent such a pulse from being input or output.

(6) Input impedance of analog input (ANIn) pins

This A/D converter charges a sampling capacitor for sampling during sampling time.
Therefore, only a leakage current flows when sampling is not in progress, and a current that charges the capacitor flows during sampling. Consequently, the input impedance fluctuates depending on whether sampling is in progress, and on the other states.
To make sure that sampling is effective, however, we recommend using the converter with analog input sources that have output impedances no greater than 1 kΩ. If a source has a higher output impedance, lengthen the sampling time or connect a larger capacitor (with a value of about 0.1 μF) to the pin from among ANI0 to ANI3 and ANI16 to ANI19 to which the source is connected (see **Figure 12-44**). The sampling capacitor may be being charged while the setting of the ADCS bit is 0 and immediately after sampling is restarted and so is not defined at these times. Accordingly, the state of conversion is undefined after charging starts in the next round of conversion after the value of the ADCS bit has been 1 or when conversion is repeated. Thus, to secure full charging regardless of the size of fluctuations in the analog signal, ensure that the output impedances of the sources of analog inputs are low or secure sufficient time for the completion of conversion.

(7) Interrupt request flag (ADIF)

The interrupt request flag (ADIF) is not cleared even if the analog input channel specification register (ADS) is changed.

Therefore, if an analog input pin is changed during A/D conversion, the A/D conversion result and ADIF flag for the pre-change analog input may be set just before the ADS register rewrite. Caution is therefore required since, at this time, when ADIF flag is read immediately after the ADS register rewrite, ADIF flag is set despite the fact A/D conversion for the post-change analog input has not ended.

When A/D conversion is stopped and then resumed, clear ADIF flag before the A/D conversion operation is resumed.

Figure 12-45. Timing of A/D Conversion End Interrupt Request Generation

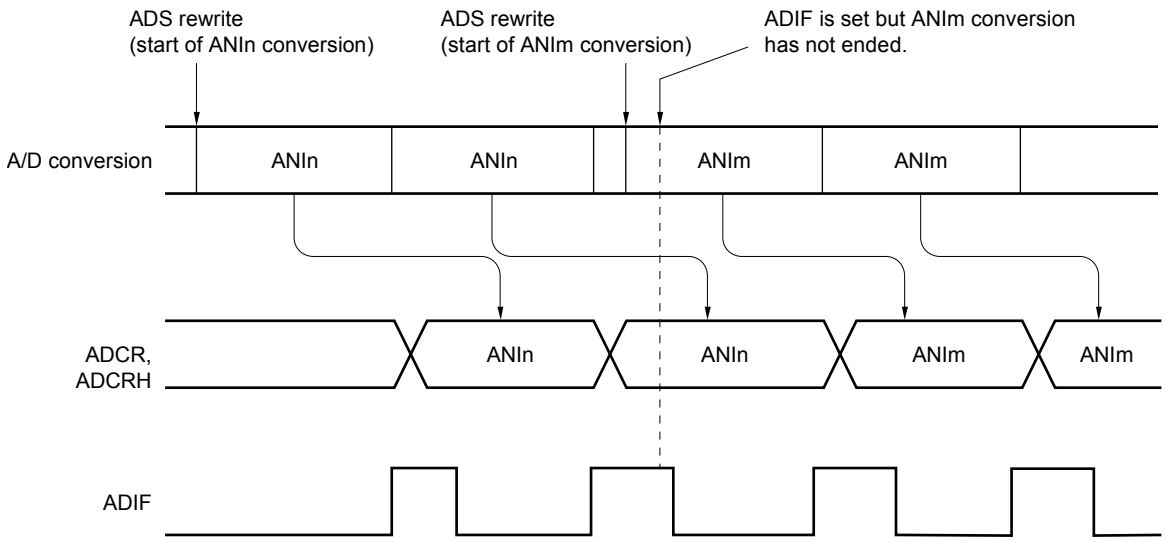

(8) Conversion results just after A/D conversion start

While in the software trigger mode or hardware trigger no-wait mode, the first A/D conversion value immediately after A/D conversion starts may not fall within the rating range if the ADCS bit is set to 1 within 1 μs after the ADCE bit was set to 1. Take measures such as polling the A/D conversion end interrupt request (INTAD) and removing the first conversion result.

(9) A/D conversion result register (ADCR, ADCRH) read operation

When a write operation is performed to A/D converter mode register 0 (ADM0), analog input channel specification register (ADS), A/D port configuration register (ADPC), and port mode control register (PMC), the contents of the ADCR and ADCRH registers may become undefined. Read the conversion result following conversion completion before writing to the ADM0, ADS, ADPC, or PMC register. Using a timing other than the above may cause an incorrect conversion result to be read.

(10) Internal equivalent circuit

The equivalent circuit of the analog input block is shown below.

Figure 12-46. Internal Equivalent Circuit of ANIn Pin

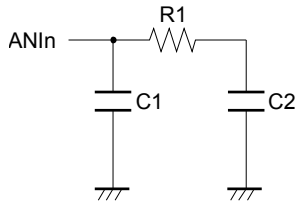

Table 12-4. Resistance and Capacitance Values of Equivalent Circuit (Reference Values)

AV_{REFP}, V_{DD}	ANIn Pin	R1 [kΩ]	C1 [pF]	C2 [pF]
2.7 V ≤ V_{DD} ≤ 3.6 V	ANI0 to ANI3	39	8	2.5
	ANI16 to ANI19	53	8	7.0
1.8 V ≤ V_{DD} ≤ 2.7 V	ANI0 to ANI3	231	8	2.5
	ANI16 to ANI19	321	8	7.0
1.6 V ≤ V_{DD} ≤ 2.7 V	ANI0 to ANI3	632	8	2.5
	ANI16 to ANI19	902	8	7.0

Remark The resistance and capacitance values shown in Table 12-4 are not guaranteed values.

(11) Starting the A/D converter

Start the A/D converter after the AV_{REFP} and V_{DD} voltages stabilize.

CHAPTER 13 SERIAL ARRAY UNIT

Serial array unit has up to four serial channels. Each channel can achieve 3-wire serial (CSI), UART, and simplified I^2C communication.

Function assignment of each channel supported by the RL78/G1D is as shown below.

Unit	Channel	Used as CSI	Used as UART	Used as Simplified I^2C
0	0	CSI00	UART0	IIC00
	1	–		–
	2	–	UART1	–
	3	–		–
1	0	CSI20	–	IIC20
	1	CSI21[Note]		–

When “UART0” is used for channels 0 and 1 of the unit 0, CSI00 cannot be used, but UART1 of channels 2 and 3 can be used.

Note For internal communication between MCU and RF transceiver.

13.1 Functions of Serial Array Unit

Each serial interface supported by the RL78/G1D has the following features.

13.1.1 3-wire serial I/O (CSI00, CSI20, CSI21)

Data is transmitted or received in synchronization with the serial clock (SCK) output from the master channel.
3-wire serial communication is clocked communication performed by using three communication lines: one for the serial clock (SCK), one for transmitting serial data (SO), one for receiving serial data (SI).

For details about the settings, see **13.5 Operation of 3-Wire Serial I/O (CSI00, CSI20, CSI21) Communication.**

[Data transmission/reception]

- Data length of 7 or 8 bits
- Phase control of transmit/receive data
- MSB/LSB first selectable
- Level setting of transmit/receive data

[Clock control]

- Master/slave selection
- Phase control of I/O clock
- Setting of transfer period by prescaler and internal counter of each channel
- Maximum transfer rate[Note]

  During master communication: Max. $f_{CLK}/2$ (CSI00 only)
  Max. $f_{CLK}/4$
  During slave communication: Max. $f_{MCK}/6$

[Interrupt function]

- Transfer end interrupt/buffer empty interrupt

[Error detection flag]

- Overrun error

In addition, CSI00 supports the SNOOZE mode. When SCK input is detected while in the STOP mode, the SNOOZE mode makes data reception that does not require the CPU possible.

Notes 1. Use the clocks within a range satisfying the SCK cycle time (t_{KCY}) characteristics (see **CHAPTER 30 ELECTRICAL SPECIFICATIONS**.

2. CSI21 is supported the functions only described in Table 2-3.

13.1.2 UART (UART0, UART1)

This is a start-stop synchronization function using two lines: serial data transmission (TxD) and serial data reception (RxD) lines. By using these two communication lines, each data frame, which consist of a start bit, data, parity bit, and stop bit, is transferred asynchronously (using the internal baud rate) between the microcontroller and the other communication party. Full-duplex UART communication can be performed by using a channel dedicated to transmission (even-numbered channel) and a channel dedicated to reception (odd-numbered channel).

For details about the settings, see **13.6 Operation of UART (UART0, UART1) Communication.**

[Data transmission/reception]

- Data length of 7, 8, or 9 bits[Note]
- Select the MSB/LSB first
- Level setting of transmit/receive data and select of reverse
- Parity bit appending and parity check functions
- Stop bit appending

[Interrupt function]

- Transfer end interrupt/buffer empty interrupt
- Error interrupt in case of framing error, parity error, or overrun error

[Error detection flag]

- Framing error, parity error, or overrun error

In addition, UART0 reception supports the SNOOZE mode. When RxD input is detected while in the STOP mode, the SNOOZE mode makes data reception that does not require the CPU possible. The reception baud rate adjustment function is supported.

Note Only UART0 can be specified for the 9-bit data length.

13.1.3 Simplified I^{2}C (IIC00, IIC20)

This is a clocked communication function to communicate with two or more devices by using two lines: serial clock (SCL) and serial data (SDA). This simplified I^{2}C is designed for single communication with a device such as EEPROM, flash memory, or A/D converter, and therefore, it functions only as a master.

Make sure by using software, as well as operating the control registers, that the AC specifications of the start and stop conditions are observed.

For details about the settings, see **13.7 Operation of Simplified I^{2}C (IIC00, IIC20) Communication**

[Data transmission/reception]

- Master transmission, master reception (only master function with a single master)
- ACK output function[Note] and ACK detection function
- Data length of 8 bits (When an address is transmitted, the address is specified by the higher 7 bits, and the least significant bit is used for R/W control.)
- Manual generation of start condition and stop condition

[Interrupt function]

- Transfer end interrupt

[Error detection flag]

- ACK error, or overrun error

* [Functions not supported by simplified I^{2}C]

- Slave transmission, slave reception
- Arbitration loss detection function
- Wait detection functions

Note When receiving the last data, ACK will not be output if 0 is written to the SOEmn bit (serial output enable register m (SOEm)) and serial communication data output is stopped. See the processing flow in **13.7.3 (2)** for details.

Remark m: Unit number (m = 0, 1), n: Channel number (n = 0)

13.2 Configuration of Serial Array Unit

The serial array unit includes the following hardware.

Table 13-1. Configuration of Serial Array Unit

Item	Configuration
Shift register	8 bits or 9 bits[Note 1]
Buffer register	Lower 8 bits or 9 bits of serial data register mn (SDRmn)[Notes 1, 2]
Serial clock I/O	SCK00, SCK20 pins (for 3-wire serial I/O), SCL00, SCL20 pins (for simplified I^2C)
Serial data input	SI00, SI20 pins (for 3-wire serial I/O), RxD0, RxD1 pins (for UART)
Serial data output	SO00, SO20 pins (for 3-wire serial I/O), TxD0, TxD1 pins (for UART)
Serial data I/O	SDA00, SDA20 pins (for simplified I^2C)
Control registers	<Registers of unit setting block> ● Peripheral enable register 0 (PER0) ● Serial clock select register m (SPSm) ● Serial channel enable status register m (SEm) ● Serial channel start register m (SSm) ● Serial channel stop register m (STm) ● Serial output enable register m (SOEm) ● Serial output register m (SOm) ● Serial output level register m (SOLm) ● Serial standby control register m (SSCm) ● Noise filter enable register 0 (NFEN0)
	<Registers of each channel> ● Serial data register mn (SDRmn) ● Serial mode register mn (SMRmn) ● Serial communication operation setting register mn (SCRmn) ● Serial status register mn (SSRmn) ● Serial flag clear trigger register mn (SIRmn)
	● Port input mode registers 0, 1 (PIM0, PIM1) ● Port output mode registers 0, 1 (POM0, POM1) ● Port mode control register 0 (PMC0) ● Port mode registers 0, 1, 7 (PM0, PM1, PM7) ● Port registers 0, 1, 7 (P0, P1, P7)

Notes 1. The number of bits used as the shift register and buffer register differs depending on the unit and channel.
mn = 00, 01: lower 9 bits

2. The lower 8 bits of serial data register mn (SDRmn) can be read or written as the following SFR, depending on the communication mode.
- CSIp communication … SIOp (CSIp data register)
- UARTq reception … RXDq (UARTq receive data register)
- UARTq transmission … TXDq (UARTq transmit data register)
- IICr communication … SIOr (IICr data register)

Remark m: Unit number (m = 0, 1), n: Channel number (n = 0 to 3), p: CSI number (p = 00, 20, 21),
q: UART number (q = 0, 1), r: IIC number (r = 00, 20)

Figure 13-1 shows the block diagram of serial array unit 0.

Figure 13-1. Block Diagram of Serial Array Unit 0

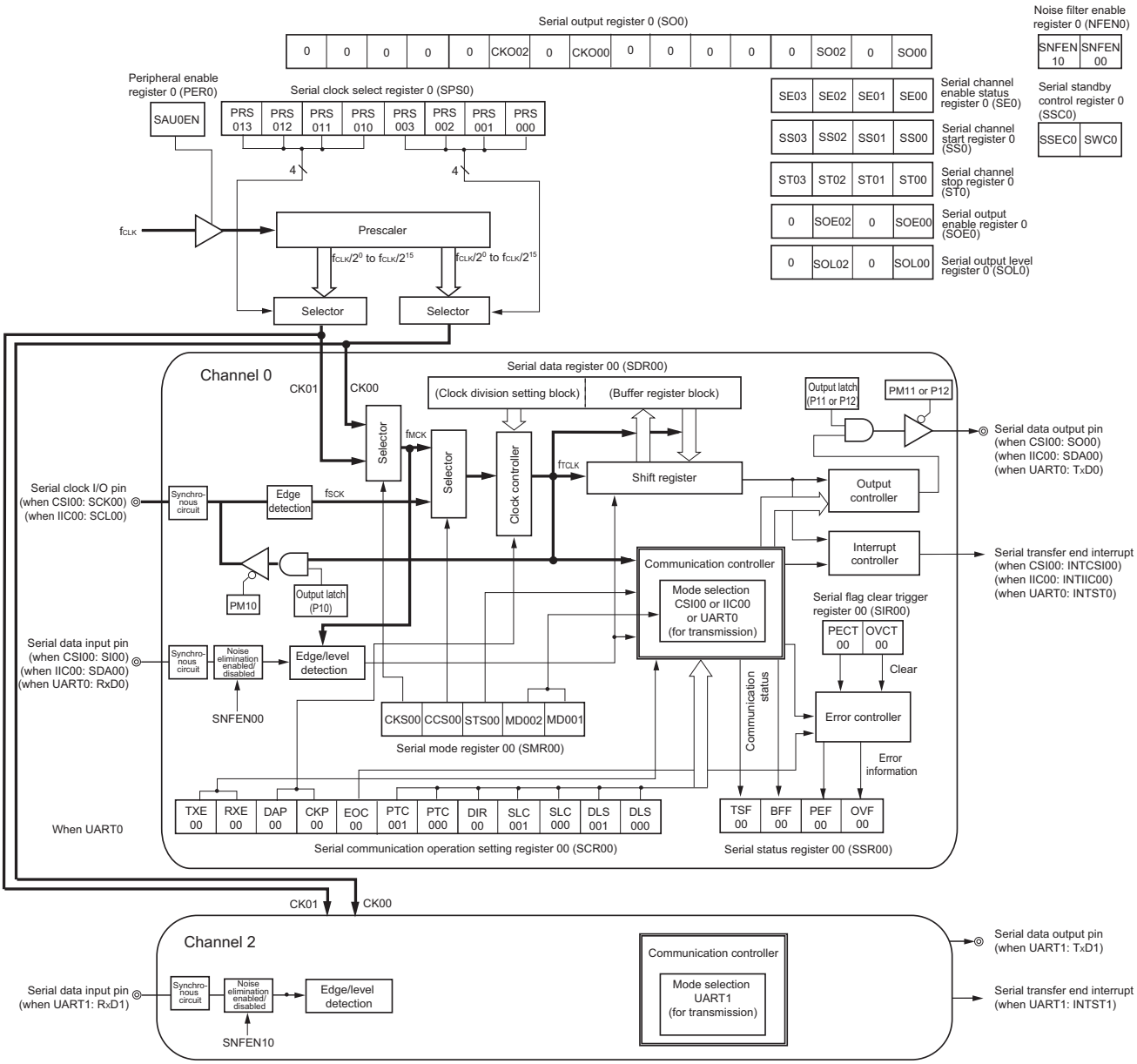

Figure 13-2 shows the block diagram of serial array unit 1.

Figure 13-2. Block Diagram of Serial Array Unit 1

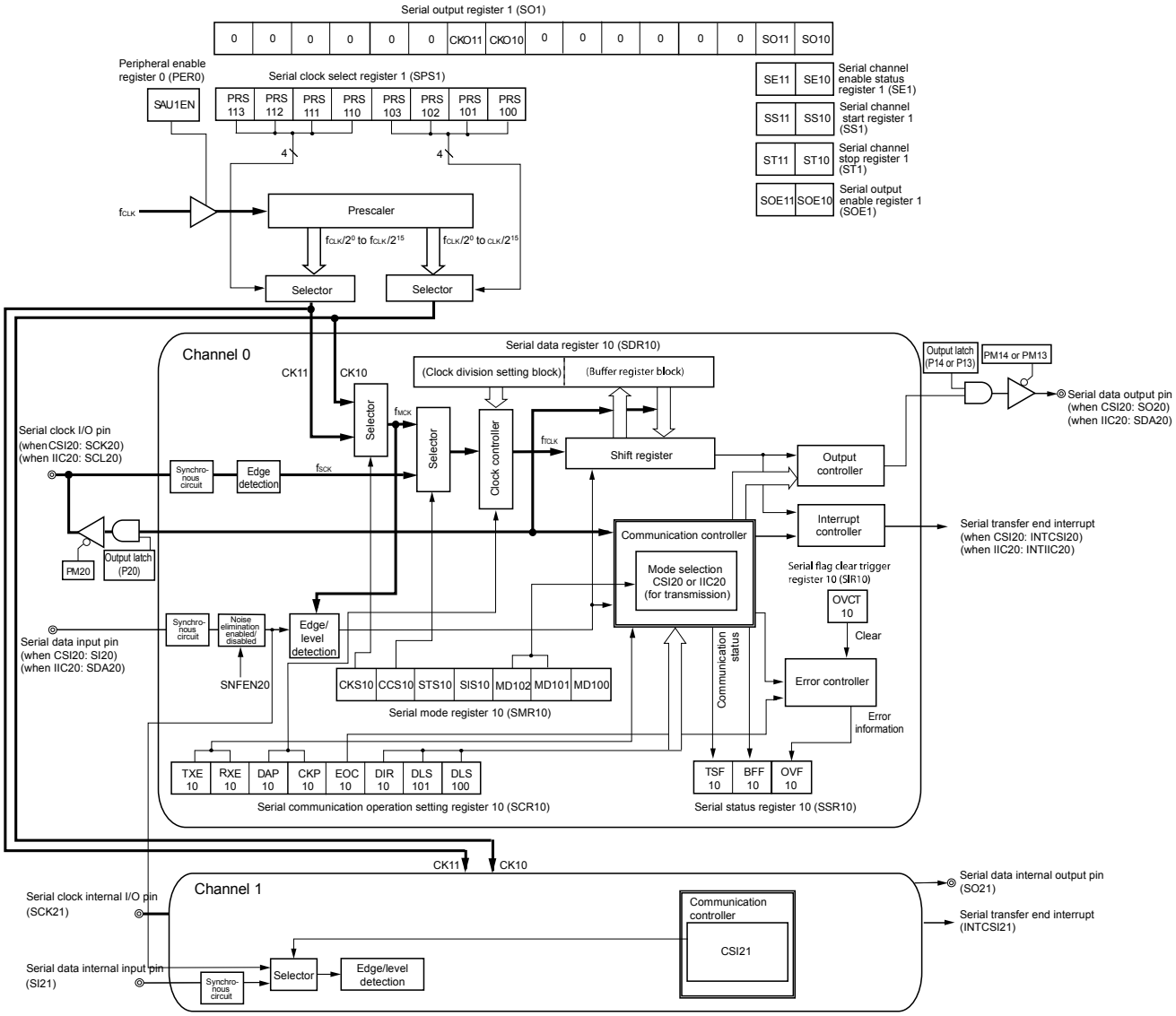

13.2.1 Shift register

This is a 9-bit register that converts parallel data into serial data or vice versa.

In case of the UART communication of nine bits of data, nine bits (bits 0 to 8) are used [Note 1].

During reception, it converts data input to the serial pin into parallel data.

When data is transmitted, the value set to this register is output as serial data from the serial output pin.

The shift register cannot be directly manipulated by program.

To read or write the shift register, use the lower 8/9 bits of serial data register mn (SDRmn).

	8	7	6	5	4	3	2	1	0
Shift register									

13.2.2 Lower 8/9 bits of the serial data register mn (SDRmn)

The SDRmn register is the transmit/receive data register (16 bits) of channel n. Bits 8 to 0 (lower 9 bits) [Note 1] or bits 7 to 0 (lower 8 bits) function as a transmit/receive buffer register, and bits 15 to 9 are used as a register that sets the division ratio of the operation clock (f_{MCK}).

When data is received, parallel data converted by the shift register is stored in the lower 8/9 bits. When data is to be transmitted, set transmit to be transferred to the shift register to the lower 8/9 bits.

The data stored in the lower 8/9 bits of this register is as follows, depending on the setting of bits 0 and 1 (DLSmn0, DLSmn1) of serial communication operation setting register mn (SCRmn), regardless of the output sequence of the data.

- 7-bit data length (stored in bits 0 to 6 of SDRmn register)
- 8-bit data length (stored in bits 0 to 7 of SDRmn register)
- 9-bit data length (stored in bits 0 to 8 of SDRmn register)[Note 1]

The SDRmn register can be read or written in 16-bit units.

The lower 8/9 bits of the SDRmn register can be read or written [Note 2] as the following SFR, depending on the communication mode.

- CSIp communication … SIOp (CSIp data register)
- UARTq reception … RXDq (UARTq receive data register)
- UARTq transmission … TXDq (UARTq transmit data register)
- IICr communication … SIOr (IICr data register)

Reset signal generation clears the SDRmn register to 0000H.

Notes 1. Only UART0 can be specified for the 9-bit data length.

2. When operation is stopped (SEmn = 0), do not rewrite SDRmn[7:0] by an 8-bit memory manipulation instruction (SDRmn[15:9] are all cleared to 0).

Remarks 1. After data is received, “0” is stored in bits 0 to 8 in bit portions that exceed the data length.

2. m: Unit number (m = 0, 1), n: Channel number (n = 0 to 3 for m = 0, n = 1 for m = 1), p: CSI number (p = 00, 20, 21), q: UART number (q = 0, 1), r: IIC number (r = 00, 20)

Figure 13-3. Format of Serial Data Register mn (SDRmn) (mn = 00, 01)

Address: FFF10H, FFF11H (SDR00), FFF12H, FFF13H (SDR01) After reset: 0000H R/W

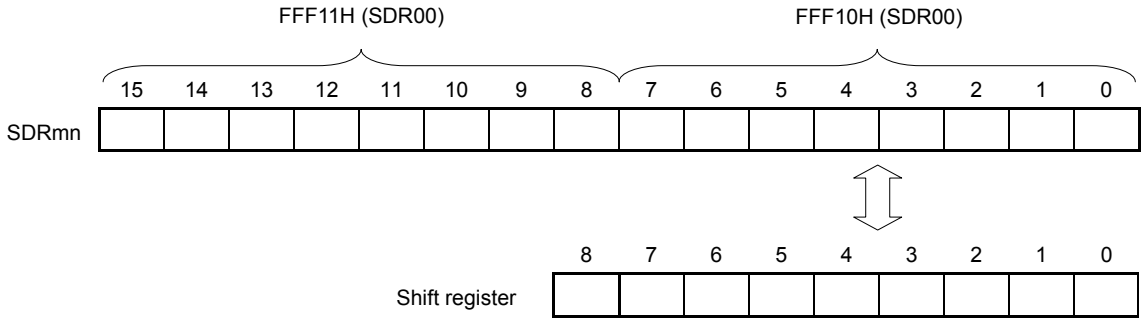

Remark For the function of the higher 7 bits of the SDRmn register, see **13.3 Registers Controlling Serial Array Unit**.

Figure 13-4. Format of Serial Data Register mn (SDRmn) (mn = 02, 03, 10, 11)

Address: FFF44H, FFF45H (SDR02), FFF46H, FFF47H (SDR03), FFF48H, FFF49H (SDR10), FFF4AH, FFF4BH (SDR11) After reset: 0000H R/W

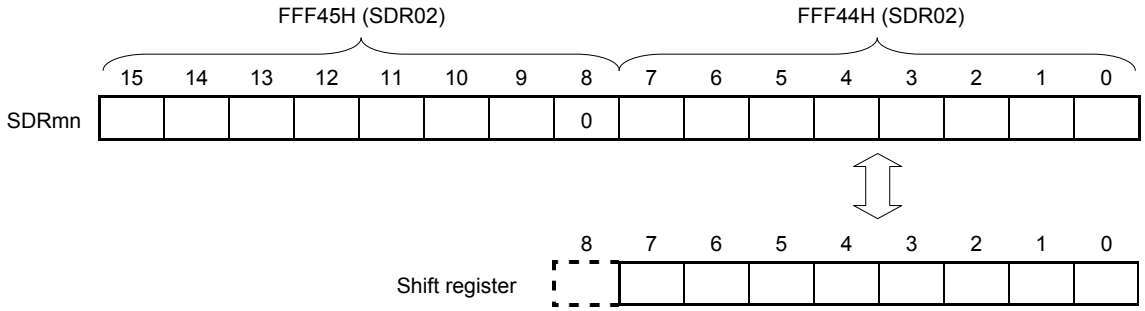

Caution Be sure to clear bit 8 to "0".

Remark For the function of the higher 7 bits of the SDRmn register, see **13.3 Registers Controlling Serial Array Unit**.

13.3 Registers Controlling Serial Array Unit

Serial array unit is controlled by the following registers.

- Peripheral enable register 0 (PER0)
- Serial clock select register m (SPSm)
- Serial mode register mn (SMRmn)
- Serial communication operation setting register mn (SCRmn)
- Serial data register mn (SDRmn)
- Serial flag clear trigger register mn (SIRmn)
- Serial status register mn (SSRmn)
- Serial channel start register m (SSm)
- Serial channel stop register m (STm)
- Serial channel enable status register m (SEm)
- Serial output enable register m (SOEm)
- Serial output level register m (SOLm)
- Serial output register m (SOm)
- Serial standby control register m (SSCm)
- Noise filter enable register 0 (NFEN0)
- Port input mode registers 0, 1 (PIM0, PIM1)
- Port output mode registers 0, 1 (POM0, POM1)
- Port mode control register 0 (PMC0)
- Port mode registers 0, 1, 7 (PM0, PM1, PM7)
- Port registers 0, 1, 7 (P0, P1, P7)

Remark m: Unit number (m = 0, 1), n: Channel number (n = 0 to 3 for m = 0, n = 1 for m = 1)

13.3.1 Peripheral enable register 0 (PER0)

PER0 is used to enable or disable supplying the clock to the peripheral hardware. Clock supply to a hardware macro that is not used is stopped in order to reduce the power consumption and noise.

When serial array unit 0 is used, be sure to set bit 2 (SAU0EN) of this register to 1.

When serial array unit 1 is used, be sure to set bit 3 (SAU1EN) of this register to 1.

The PER0 register can be set by a 1-bit or 8-bit memory manipulation instruction.

Reset signal generation clears the PER0 register to 00H.

Figure 13-5. Format of Peripheral Enable Register 0 (PER0)

Address: F00F0H After reset: 00H R/W

Symbol	<7>	6	<5>	<4>	<3>	<2>	1	<0>
PER0	RTCEN	0	ADCEN	IICA0EN	SAU1EN	SAU0EN	0	TAU0EN

SAUmEN	Control of serial array unit m input clock supply
0	Stops supply of input clock. ● SFR used by serial array unit m cannot be written. ● Serial array unit m is in the reset status.
1	Enables input clock supply. ● SFR used by serial array unit m can be read/written.

Cautions 1. When setting serial array unit m, be sure to first set the following registers with the SAUmEN bit set to 1. If SAUmEN = 0, control registers of serial array unit m become default values and writing to them is ignored (except for the input switch control register (ISC), noise filter enable register 0 (NFEN0), port input mode registers 0, 1 (PIM0, PIM1), port output mode registers 0, 1 (POM0, POM1), port mode control registers 0 (PMC0), port mode registers 0, 1, 7 (PM0, PM1, PM7), and port registers 0, 1, 7 (P0, P1, P7)).

- **Serial clock select register m (SPSm)**
- **Serial mode register mn (SMRmn)**
- **Serial communication operation setting register mn (SCRmn)**
- **Serial data register mn (SDRmn)**
- **Serial flag clear trigger register mn (SIRmn)**
- **Serial status register mn (SSRmn)**
- **Serial channel start register m (SSm)**
- **Serial channel stop register m (STm)**
- **Serial channel enable status register m (SEm)**
- **Serial output enable register m (SOEm)**
- **Serial output level register m (SOLm)**
- **Serial output register m (SOm)**
- **Serial standby control register m (SSCm)**

2. Be sure to clear bits 1 and 6 to “0”.

13.3.2 Serial clock select register m (SPSm)

The SPSm register is a 16-bit register that is used to select two types of operation clocks (CKm0, CKm1) that are commonly supplied to each channel. CKm1 is selected by bits 7 to 4 of the SPSm register , and CKm0 is selected by bits 3 to 0.

Rewriting the SPSm register is prohibited when the register is in operation (when SEmn = 1).

The SPSm register can be set by a 16-bit memory manipulation instruction.

The lower 8 bits of the SPSm register can be set with an 8-bit memory manipulation instruction with SPSmL.

Reset signal generation clears the SPSm register to 0000H.

Figure 13-6. Format of Serial Clock Select Register m (SPSm)

Address: F0126H, F0127H (SPS0), F0166H, F0167H (SPS1) After reset: 0000H R/W

Symbol	15	14	13	12	11	10	9	8	7	6	5	4	3	2	1	0
SPSm	0	0	0	0	0	0	0	0	PRS m13	PRS m12	PRS m11	PRS m10	PRS m03	PRS m02	PRS m01	PRS m00

PRS mk3	PRS mk2	PRS mk1	PRS mk0	Section of operation clock (CKmk) Note 1					
					f_{CLK} = 2 MHz	f_{CLK} = 5 MHz	f_{CLK} = 10 MHz	f_{CLK} = 20 MHz	f_{CLK} = 32 MHz
0	0	0	0	f_{CLK}	2 MHz	5 MHz	10 MHz	20 MHz	32 MHz
0	0	0	1	$f_{CLK}/2$	1 MHz	2.5 MHz	5 MHz	10 MHz	16 MHz
0	0	1	0	$f_{CLK}/2^2$	500 kHz	1.25 MHz	2.5 MHz	5 MHz	8 MHz
0	0	1	1	$f_{CLK}/2^3$	250 kHz	625 kHz	1.25 MHz	2.5 MHz	4 MHz
0	1	0	0	$f_{CLK}/2^4$	125 kHz	313 kHz	625 kHz	1.25 MHz	2 MHz
0	1	0	1	$f_{CLK}/2^5$	62.5 kHz	156 kHz	313 kHz	625 kHz	1 MHz
0	1	1	0	$f_{CLK}/2^6$	31.3 kHz	78.1 kHz	156 kHz	313 kHz	500 kHz
0	1	1	1	$f_{CLK}/2^7$	15.6 kHz	39.1 kHz	78.1 kHz	156 kHz	250 kHz
1	0	0	0	$f_{CLK}/2^8$	7.81 kHz	19.5 kHz	39.1 kHz	78.1 kHz	125 kHz
1	0	0	1	$f_{CLK}/2^9$	3.91 kHz	9.77 kHz	19.5 kHz	39.1 kHz	62.5 kHz
1	0	1	0	$f_{CLK}/2^{10}$	1.95 kHz	4.88 kHz	9.77 kHz	19.5 kHz	31.3 kHz
1	0	1	1	$f_{CLK}/2^{11}$	977 Hz	2.44 kHz	4.88 kHz	9.77 kHz	15.6 kHz
1	1	0	0	$f_{CLK}/2^{12}$	488 Hz	1.22 kHz	2.44 kHz	4.88 kHz	78.1 kHz
1	1	0	1	$f_{CLK}/2^{13}$	244 Hz	610 kHz	1.22 kHz	2.44 kHz	3.91 kHz
1	1	1	0	$f_{CLK}/2^{14}$	122 Hz	305 Hz	610 Hz	1.22 kHz	1.95 kHz
1	1	1	1	$f_{CLK}/2^{15}$	61 Hz	153 kHz	305 Hz	610 Hz	997 Hz

Note When changing the clock selected for f_{CLK} (by changing the system clock control register (CKC) value), do so after having stopped (serial channel stop register m (STm) = 000FH) the operation of the serial array unit (SAU).

Caution Be sure to clear bits 15 to 8 to "0".

Remarks 1. f_{CLK}: CPU/peripheral hardware clock frequency

2. m: Unit number (m = 0, 1)

3. k = 0, 1

13.3.3 Serial mode register mn (SMRmn)

The SMRmn register is a register that sets an operation mode of channel n. It is also used to select an operation clock (f_{MCK}), specify whether the serial clock (f_{SCK}) may be input or not, set a start trigger, an operation mode (CSI, UART, or simplified I^2C), and an interrupt source. This register is also used to invert the level of the receive data only in the UART mode.

Rewriting the SMRmn register is prohibited when the register is in operation (when SEmn = 1). However, the MDmn0 bit can be rewritten during operation.

The SMRmn register can be set by a 16-bit memory manipulation instruction.

Reset signal generation sets the SMRmn register to 0020H.

Figure 13-7. Format of Serial Mode Register mn (SMRmn) (1/2)

Address: F0110H, F0111H (SMR00) to F0116H, F0117H (SMR03), F0150H, F0151H (SMR10), F0152H, F0153H (SMR11) After reset: 0020H R/W

Symbol	15	14	13	12	11	10	9	8	7	6	5	4	3	2	1	0
SMRmn	CKSmn	CCSmn	0	0	0	0	0	STSmn[Note]	0	SISmn0[Note]	1	0	0	MDmn2	MDmn1	MDmn0

CKSmn	Selection of operation clock (f_{MCK}) of channel n
0	Operation clock CKm0 set by the SPSm register
1	Operation clock CKm1 set by the SPSm register
Operation clock (f_{MCK}) is used by the edge detector. In addition, depending on the setting of the CCSmn bit and the higher 7 bits of the SDRmn register, a transfer clock (f_{TCLK}) is generated.	

CCSmn	Selection of transfer clock (f_{TCLK}) of channel n
0	Divided operation clock f_{MCK} specified by the CKSmn bit
1	Clock input f_{SCK} from the SCKp pin (slave transfer in CSI mode)
Transfer clock f_{TCLK} is used for the shift register, communication controller, output controller, interrupt controller, and error controller. When CCSmn = 0, the division ratio of operation clock (f_{MCK}) is set by the higher 7 bits of the SDRmn register.	

STSmn Note	Selection of start trigger source
0	Only software trigger is valid (selected for CSI, UART transmission, and simplified I^2C).
1	Valid edge of the RxDq pin (selected for UART reception)
Transfer is started when the above source is satisfied after 1 is set to the SSm register.	

Note The SMR01 and SMR03 registers only.

Caution Be sure to clear bits 13 to 9, 7, 4, and 3 (or bits 13 to 6, 4, and 3 for the SMR00, SMR02, SMR10, or SMR11 register) to "0". Be sure to set bit 5 to "1".

Remark m: Unit number (m = 0, 1), n: Channel number (n = 0 to 3 for m = 0, n = 0, 1 for m = 1), p: CSI number (p = 00, 20, 21), q: UART number (q = 0, 1), r: IIC number (r = 00, 20)

Figure 13-7. Format of Serial Mode Register mn (SMRmn) (2/2)

Address: F0110H, F0111H (SMR00) to F0116H, F0117H (SMR03), F0150H, F0151H (SMR10), F0152H, F0153H (SMR11) After reset: 0020H R/W

Symbol	15	14	13	12	11	10	9	8	7	6	5	4	3	2	1	0
SMRmn	CKSmn	CCSmn	0	0	0	0	0	STSmn[Note]	0	SISmn0[Note]	1	0	0	MDmn2	MDmn1	MDmn0

SISmn0[Note]	Controls inversion of level of receive data of channel n in UART mode
0	Falling edge is detected as the start bit. The input communication data is captured as is.
1	Rising edge is detected as the start bit. The input communication data is inverted and captured.

MDmn2	MDmn1	Setting of operation mode of channel n
0	0	CSI mode
0	1	UART mode
1	0	Simplified I^2C mode
1	1	Setting prohibited

MDmn0	Selection of interrupt source of channel n
0	Transfer end interrupt
1	Buffer empty interrupt (Occurs when data is transferred from the SDRmn register to the shift register.)
For successive transmission, the next transmit data is written by setting the MDmn0 bit to 1 when SDRmn data has run out.	

Note The SMR01 and SMR03 registers only.

Caution Be sure to clear bits 13 to 9, 7, 4, and 3 (or bits 13 to 6, 4, and 3 for the SMR00, SMR02, SMR10, or SMR11 register) to "0". Be sure to set bit 5 to "1".

Remark m: Unit number (m = 0, 1), n: Channel number (n = 0 to 3 for m = 0, n = 0, 1 for m = 1),
p: CSI number (p = 00, 20, 21), q: UART number (q = 0, 1), r: IIC number (r = 00, 20)

13.3.4 Serial communication operation setting register mn (SCRmn)

The SCRmn register is a communication operation setting register of channel n. It is used to set a data transmission/reception mode, phase of data and clock, whether an error signal is to be masked or not, parity bit, start bit, stop bit, and data length.

Rewriting the SCRmn register is prohibited when the register is in operation (when SEmn = 1).

The SCRmn register can be set by a 16-bit memory manipulation instruction.

Reset signal generation sets the SCRmn register to 0087H.

Figure 13-8. Format of Serial Communication Operation Setting Register mn (SCRmn) (1/2)

Address: F0118H, F0119H (SCR00) to F011EH, F011FH (SCR03), F0158H, F0159H (SCR10), F015AH, F015BH (SMR11) After reset: 0087H R/W

Symbol	15	14	13	12	11	10	9	8	7	6	5	4	3	2	1	0
SCRmn	TXEmn	RXEmn	DAPmn	CKPmn	0	EOCmn	PTCmn1	PTCmn0	DIRmn	0	SLCmn1 Note 1	SLCmn0	0	1	DLSmn1 Note 2	DLSmn0

TXEmn	RXEmn	Setting of operation mode of channel n
0	0	Disable communication.
0	1	Reception only
1	0	Transmission only
1	1	Transmission/reception

DAPmn	CKPmn	Selection of data and clock phase in CSI mode	Type
0	0	SCKp SOp D7 D6 D5 D4 D3 D2 D1 D0 SIp input timing	1
0	1	SCKp SOp D7 D6 D5 D4 D3 D2 D1 D0 SIp input timing	2
1	0	SCKp SOp D7 D6 D5 D4 D3 D2 D1 D0 SIp input timing	3
1	1	SCKp SOp D7 D6 D5 D4 D3 D2 D1 D0 SIp input timing	4
Be sure to set DAPmn, CKPmn = 0, 0 in the UART mode and simplified I^2C mode.			

EOCmn	Selection of masking of error interrupt signal (INTSREx (x = 0 to 3))
0	Disables generation of error interrupt INTSREx (INTSRx is generated).
1	Enables generation of error interrupt INTSREx (INTSRx is not generated if an error occurs).
Set EOCmn = 0 in the CSI mode, simplified I^2C mode, and during UART transmission Note 3.	

Notes 1. The SCR00 and SCR02 registers only.

2. The SCR00 and SCR01 registers only. Others are fixed to 1.

3. When using CSImn not with EOCmn = 0, error interrupt INTSREn may be generated.

Caution Be sure to clear bits 3, 6, and 11 to "0" (Also clear bit 5 of the SCR01, SCR03, SCR10, or SCR11 register to 0). Be sure to set bit 2 to "1".

Remark m: Unit number (m = 0, 1), n: Channel number (n = 0 to 3 for m = 0, n = 0, 1 for m = 1)

Figure 13-8. Format of Serial Communication Operation Setting Register mn (SCRmn) (2/2)

Address: F0118H, F0119H (SCR00) to F011EH, F011FH (SCR03), F0158H, F0159H (SCR10), F015AH, F015BH (SMR11) After reset: 0087H R/W

Symbol	15	14	13	12	11	10	9	8	7	6	5	4	3	2	1	0
SCRmn	TXEmn	RXEmn	DAPmn	CKPmn	0	EOCmn	PTCmn1	PTCmn0	DIRmn	0	SLCmn1 Note 1	SLCmn0	0	1	DLSmn1 Note 2	DLSmn0

PTCmn1	PTCmn0	Setting of parity bit in UART mode	
		Transmission	Reception
0	0	Does not output the parity bit.	Receives without parity
0	1	Outputs 0 parity Note 3.	No parity judgment
1	0	Outputs even parity.	Judged as even parity.
1	1	Outputs odd parity.	Judges as odd parity.
Be sure to set PTCmn1, PTCmn0 = 0, 0 in the CSI mode and simplified I^2C mode.			

DIRmn	Selection of data transfer sequence in CSI and UART modes
0	Inputs/outputs data with MSB first.
1	Inputs/outputs data with LSB first.
Be sure to clear DIRmn = 0 in the simplified I^2C mode.	

SLCmn1 Note 1	SLCmn0	Setting of stop bit in UART mode
0	0	No stop bit
0	1	Stop bit length = 1 bit
1	0	Stop bit length = 2 bits (mn = 00, 02, 10, 12 only)
1	1	Setting prohibited
When the transfer end interrupt is selected, the interrupt is generated when all stop bits have been completely transferred. Set 1 bit (SLCmn1, SLCmn0 = 0, 1) during UART reception and in the simplified I^2C mode. Set no stop bit (SLCmn1, SLCmn0 = 0, 0) in the CSI mode. Set 1 bit (SLCmn1, SLCmn0 = 0, 1) or 2 bits (SLCmn1, SLCmn0 = 1, 0) during UART transmission.		

DLSmn1 Note 2	DLSmn0	Setting of data length in CSI and UART modes
0	1	9-bit data length (stored in bits 0 to 8 of the SDRmn register) (settable in UART mode only)
1	0	7-bit data length (stored in bits 0 to 6 of the SDRmn register)
1	1	8-bit data length (stored in bits 0 to 7 of the SDRmn register)
Other than above		Setting prohibited
Be sure to set DLSmn1, DLSmn0 = 1, 1 in the simplified I^2C mode.		

Notes 1. The SCR00 and SCR02 registers only.

2. The SCR00, SCR01, SCR10 and SCR11 registers only. Others are fixed to 1.

3. 0 is always added regardless of the data contents.

Caution Be sure to clear bits 3, 6, and 11 to "0" (Also clear bit 5 of the SCR01, SCR03, SCR10, or SCR11 register to 0). Be sure to set bit 2 to "1".

Remark m: Unit number (m = 0, 1), n: Channel number (n = 0 to 3 for m = 0, n = 0, 1 for m = 1),
p: CSI number (p = 00, 20, 21)

13.3.5 Higher 7 bits of the serial data register mn (SDRmn)

The SDRmn register is the transmit/receive data register (16 bits) of channel n. Bits 8 to 0 (lower 9 bits) of SDR00, SDR01 or bits 7 to 0 (lower 8 bits) of SDR02, SDR03, SDR10, SDR11 function as a transmit/receive buffer register, and bits 15 to 9 (higher 7 bits) are used as a register that sets the division ratio of the operation clock (f_{MCK}).

If the CCSmn bit of serial mode register mn (SMRmn) is cleared to 0, the clock set by dividing the operation clock by bits 15 to 9 (higher 7 bits) of the SDRmn register is used as the transfer clock.

If the CCSmn bit of serial mode register mn (SMRmn) is set to 1, set bits 15 to 9 (upper 7 bits) of SDR00, SDR10, and SDR11 to 0000000B. The input clock f_{SCK} (slave transfer in CSI mode) from the SCKp pin is used as the transfer clock.

The lower 8/9 bits of the SDRmn register function as a transmit/receive buffer register. During reception, the parallel data converted by the shift register is stored in the lower 8/9 bits, and during transmission, the data to be transmitted to the shift register is set to the lower 8/9 bits.

The SDRmn register can be read or written in 16-bit units.

However, the higher 7 bits can only be written or read when the operation is stopped (SEmn = 0). During operation (SEmn = 1), a value is written only to the lower 8/9 bits of the SDRmn register. When the SDRmn register is read during operation, the higher 7 bits are always read as 0.

Reset signal generation clears the SDRmn register to 0000H.

Figure 13-9. Format of Serial Data Register mn (SDRmn)

Address: FFF10H, FFF11H (SDR00), FFF12H, FFF13H (SDR01) After reset: 0000H R/W

	FFF11H (SDR00)								FFF10H (SDR00)							
Symbol	15	14	13	12	11	10	9	8	7	6	5	4	3	2	1	0
SDRmn								0								

Address: FFF44H, FFF45H (SDR02), FFF46H, FFF47H (SDR03), FFF48H, FFF49H (SDR10), FFF4AH, FFF4BH (SDR11) After reset: 0000H R/W

	FFF45H (SDR02)								FFF44H (SDR02)							
Symbol	15	14	13	12	11	10	9	8	7	6	5	4	3	2	1	0
SDRmn								0								

SDRmn[15:9]							Transfer clock setting by dividing the operating clock
0	0	0	0	0	0	0	$f_{MCK}/2$
0	0	0	0	0	0	1	$f_{MCK}/4$
0	0	0	0	0	1	0	$f_{MCK}/6$
0	0	0	0	0	1	1	$f_{MCK}/8$
• • •	• • •	• • •	• • •	• • •	• • •	• • •	• • •
1	1	1	1	1	1	0	$f_{MCK}/254$
1	1	1	1	1	1	1	$f_{MCK}/256$

Cautions 1. Be sure to clear bit 8 of the SDR02, SDR03, SDR10, and SDR11 to "0".

2. Setting SDRmn[15:9] = (0000000B, 0000001B) is prohibited when UART is used.

3. Setting SDRmn[15:9] = 0000000B is prohibited when simplified I^2C is used. Set SDRmn[15:9] to 0000001B or greater.

4. When operation is stopped (SEmn = 0), do not rewrite SDRmn[7:0] by an 8-bit memory manipulation instruction (SDRmn[15:9] are all cleared to 0).

Remarks 1. For the function of the lower 8/9 bits of the SDRmn register, see **13.2 Configuration of Serial Array Unit**.

2. m: Unit number (m = 0, 1), n: Channel number (n = 0 to 3 for m = 0, n = 0, 1 for m = 1)

13.3.6 Serial flag clear trigger register mn (SIRmn)

The SIRmn register is a trigger register that is used to clear each error flag of channel n.

When each bit (FECTmn, PECTmn, OVCTmn) of this register is set to 1, the corresponding bit (FEFmn, PEFmn, OVFmn) of serial status register mn is cleared to 0. Because the SIRmn register is a trigger register, it is cleared immediately when the corresponding bit of the SSRmn register is cleared.

The SIRmn register can be set by a 16-bit memory manipulation instruction.

The lower 8 bits of the SIRmn register can be set with an 8-bit memory manipulation instruction with SIRmnL.

Reset signal generation clears the SIRmn register to 0000H.

Figure 13-10. Format of Serial Flag Clear Trigger Register mn (SIRmn)

Address: F0108H, F0109H (SIR00) to F010EH, F010FH (SIR03), F0148H, F0149H (SIR10), F014AH, F014BH (SIR11) After reset: 0000H R/W

Symbol	15	14	13	12	11	10	9	8	7	6	5	4	3	2	1	0
SIRmn	0	0	0	0	0	0	0	0	0	0	0	0	0	FECTmn[Note]	PECTmn	OVCTmn

FECTmn[Note]	Clear trigger of framing error of channel n
0	Not cleared
1	Clears the FEFmn bit of the SSRmn register to 0.

PECTmn	Clear trigger of parity error flag of channel n
0	Not cleared
1	Clears the PEFmn bit of the SSRmn register to 0.

OVCTmn	Clear trigger of overrun error flag of channel n
0	Not cleared
1	Clears the OVFmn bit of the SSRmn register to 0.

Note The SIR01 and SIR03 registers only.

Caution Be sure to clear bits 15 to 3 (or bits 15 to 2 for the SIR00, SIR02, SIR10, or SIR11 register) to "0".

Remarks 1. m: Unit number (m = 0, 1), n: Channel number (n = 0 to 3 for m = 0, n = 0, 1 for m = 1)

2. When the SIRmn register is read, 0000H is always read.

13.3.7 Serial status register mn (SSRmn)

The SSRmn register is a register that indicates the communication status and error occurrence status of channel n. The errors indicated by this register are a framing error, parity error, and overrun error.

The SSRmn register can be read by a 16-bit memory manipulation instruction.

The lower 8 bits of the SSRmn register can be set with an 8-bit memory manipulation instruction with SSRmnL.

Reset signal generation clears the SSRmn register to 0000H.

Figure 13-11. Format of Serial Status Register mn (SSRmn) (1/2)

Address: F0100H, F0101H (SSR00) to F0106H, F0107H (SSR03), F0140H, F0141H (SSR10), F0142H, F0143H (SSR11) After reset: 0000H R

Symbol	15	14	13	12	11	10	9	8	7	6	5	4	3	2	1	0
SSRmn	0	0	0	0	0	0	0	0	0	TSFmn	BFFmn	0	0	FEFmn[Note]	PEFmn	OVFmn

TSFmn	Communication status indication flag of channel n
0	Communication is stopped or suspended.
1	Communication is in progress.

<Clear conditions>

- The STmn bit of the STm register is set to 1 (communication is stopped) or the SSmn bit of the SSm register is set to 1 (communication is suspended).
- Communication ends.

<Set condition>

- Communication starts.

BFFmn	Buffer register status indication flag of channel n
0	Valid data is not stored in the SDRmn register.
1	Valid data is stored in the SDRmn register.

<Clear conditions>

- Transferring transmit data from the SDRmn register to the shift register ends during transmission.
- Reading receive data from the SDRmn register ends during reception.
- The STmn bit of the STm register is set to 1 (communication is stopped) or the SSmn bit of the SSm register is set to 1 (communication is enabled).

<Set conditions>

- Transmit data is written to the SDRmn register while the TXEmn bit of the SCRmn register is set to 1 (transmission or transmission and reception mode in each communication mode).
- Receive data is stored in the SDRmn register while the RXEmn bit of the SCRmn register is set to 1 (reception or transmission and reception mode in each communication mode).
- A reception error occurs.

Note The SSR01 and SSR03 registers only.

Caution When the CSI is performing reception operations in the SNOOZE mode (SWCm = 1), the BFFmn flag will not change.

Remark m: Unit number (m = 0, 1), n: Channel number (n = 0 to 3 for m = 0, n = 0, 1 for m = 1)

Figure 13-11. Format of Serial Status Register mn (SSRmn) (2/2)

Address: F0100H, F0101H (SSR00) to F0106H, F0107H (SSR03), F0140H, F0141H (SSR10), F0142H, F0143H (SSR11) After reset: 0000H R

Symbol	15	14	13	12	11	10	9	8	7	6	5	4	3	2	1	0
SSRmn	0	0	0	0	0	0	0	0	0	TSFmn	BFFmn	0	0	FEFmn[Note]	PEFmn	OVFmn

FEFmn[Note]	Framing error detection flag of channel n
0	No error occurs.
1	An error occurs (during UART reception).

<Clear condition>
- 1 is written to the FECTmn bit of the SIRmn register.

<Set condition>
- A stop bit is not detected when UART reception ends.

PEFmn	Parity/ACK error detection flag of channel n
0	No error occurs.
1	Parity error occurs (during UART reception) or ACK is not detected (during I^2C transmission).

<Clear condition>
- 1 is written to the PECTmn bit of the SIRmn register.

<Set condition>
- The parity of the transmit data and the parity bit do not match when UART reception ends (parity error).
- No ACK signal is returned from the slave channel at the ACK reception timing during I^2C transmission (ACK is not detected).

OVFmn	Overrun error detection flag of channel n
0	No error occurs.
1	An error occurs

<Clear condition>
- 1 is written to the OVCTmn bit of the SIRmn register.

<Set condition>
- Even though receive data is stored in the SDRmn register, that data is not read and transmit data or the next receive data is written while the RXEmn bit of the SCRmn register is set to 1 (reception or transmission and reception mode in each communication mode).
- Transmit data is not ready for slave transmission or transmission and reception in CSI mode.

Note The SSR01 and SSR03 registers only.

Cautions 1. If data is written to the SDRmn register when BFFmn = 1, the transmit/receive data stored in the register is discarded and an overrun error (OVEmn = 1) is detected.

2. When the CSI is performing reception operations in the SNOOZE mode (SWCm = 1), the OVFmn flag will not change.

Remark m: Unit number (m = 0, 1), n: Channel number (n = 0 to 3 for m = 0, n = 0, 1 for m = 1)

13.3.8 Serial channel start register m (SSm)

The SSm register is a trigger register that is used to enable starting communication/count by each channel.

When 1 is written a bit of this register (SSmn), the corresponding bit (SEmn) of serial channel enable status register m (SEm) is set to 1 (Operation is enabled). Because the SSmn bit is a trigger bit, it is cleared immediately when SEmn = 1.

The SSm register can be set by a 16-bit memory manipulation instruction.

The lower 8 bits of the SSm register can be set with an 1-bit or 8-bit memory manipulation instruction with SSmL.

Reset signal generation clears the SSm register to 0000H.

Figure 13-12. Format of Serial Channel Start Register m (SSm)

Address: F0122H, F0123H (SS0) After reset: 0000H R/W

Symbol	15	14	13	12	11	10	9	8	7	6	5	4	3	2	1	0
SS0	0	0	0	0	0	0	0	0	0	0	0	0	SS03	SS02	SS01	SS00

Address: F0162H, F0163H (SS1) After reset: 0000H R/W

Symbol	15	14	13	12	11	10	9	8	7	6	5	4	3	2	1	0
SS1	0	0	0	0	0	0	0	0	0	0	0	0	0	0	SS11	SS10

SSmn	Operation start trigger of channel n
0	No trigger operation
1	Sets the SEmn bit to 1 and enters the communication wait status[Note].

Note If set the SSmn = 1 to during a communication operation, will wait status to stop the communication. At this time, holding status value of control register and shift register, SCKmn and SOmn pins, and FEFmn, PEFmn, OVFmn flags.

Cautions 1. Be sure to clear bits 15 to 4 of the SS0 register and bits 15 to 2 of the SS1 register to "0".

2. For the UART reception, set the RXEmn bit of SCRmn register to 1, and then be sure to set SSmn to 1 after 4 or more f_{MCK} clocks have elapsed.

Remarks 1. m: Unit number (m = 0, 1), n: Channel number (n = 0 to 3 for m = 0, n = 0, 1 for m = 1)

2. When the SSm register is read, 0000H is always read.

13.3.9 Serial channel stop register m (STm)

The STm register is a trigger register that is used to enable stopping communication/count by each channel.

When 1 is written a bit of this register (STmn), the corresponding bit (SEmn) of serial channel enable status register m (SEm) is cleared to 0 (operation is stopped). Because the STmn bit is a trigger bit, it is cleared immediately when SEmn = 0.

The STm register can set written by a 16-bit memory manipulation instruction.

The lower 8 bits of the STm register can be set with a 1-bit or 8-bit memory manipulation instruction with STmL.

Reset signal generation clears the STm register to 0000H.

Figure 13-13. Format of Serial Channel Stop Register m (STm)

Address: F0124H, F0125H (ST0) After reset: 0000H W

Symbol	15	14	13	12	11	10	9	8	7	6	5	4	3	2	1	0
ST0	0	0	0	0	0	0	0	0	0	0	0	0	ST03	ST02	ST01	ST00

Address: F0164H, F0165H (ST1) After reset: 0000H W

Symbol	15	14	13	12	11	10	9	8	7	6	5	4	3	2	1	0
ST1	0	0	0	0	0	0	0	0	0	0	0	0	0	0	ST11	ST10

STm n	Operation stop trigger of channel n
0	No trigger operation
1	Clears the SEmn bit to 0 and stops the communication operation[Note].

Note Holding status value of the control register and shift register, the SCKmn and SOmn pins, and FEFmn, PEFmn, OVFmn flags.

Caution Be sure to clear bits 15 to 4 of the ST0 register and bits 15 to 2 of the ST1 register to "0".

Remarks 1. m: Unit number (m = 0, 1), n: Channel number (n = 0 to 3 for m = 0, n = 0, 1 for m = 1)

2. When the STm register is read, 0000H is always read.

13.3.10 Serial channel enable status register m (SEm)

The SEm register indicates whether data transmission/reception operation of each channel is enabled or stopped.

When 1 is written a bit of serial channel start register m (SSm), the corresponding bit of this register is set to 1. When 1 is written a bit of serial channel stop register m (STm), the corresponding bit is cleared to 0.

Channel n that is enabled to operate cannot rewrite by software the value of the CKOmn bit (serial clock output of channel n) of serial output register m (SOm) to be described below, and a value reflected by a communication operation is output from the serial clock pin.

Channel n that stops operation can set the value of the CKOmn bit of the SOm register by software and output its value from the serial clock pin. In this way, any waveform, such as that of a start condition/stop condition, can be created by software.

The SEm register can be read by a 16-bit memory manipulation instruction.

The lower 8 bits of the SEm register can be set with a 1-bit or 8-bit memory manipulation instruction with SEmL.

Reset signal generation clears the SEm register to 0000H.

Figure 13-14. Format of Serial Channel Enable Status Register m (SEm)

Address: F0120H, F0121H (SE0) After reset: 0000H R

Symbol	15	14	13	12	11	10	9	8	7	6	5	4	3	2	1	0
SE0	0	0	0	0	0	0	0	0	0	0	0	0	SE03	SE02	SE01	SE00

Address: F0160H, F0161H (SE1) After reset: 0000H R

Symbol	15	14	13	12	11	10	9	8	7	6	5	4	3	2	1	0
SE1	0	0	0	0	0	0	0	0	0	0	0	0	0	0	SE11	SE10

SEm n	Indication of operation enable/stop status of channel n
0	Operation stops
1	Operation is enabled.

Remark m: Unit number (m = 0, 1), n: Channel number (n = 0 to 3 for m = 0, n = 0, 1 for m = 1)

13.3.11 Serial output enable register m (SOEm)

The SOEm register is a register that is used to enable or stop output of the serial communication operation of each channel.

Channel n that enables serial output cannot rewrite by software the value of the SOmn bit of serial output register m (SOm) to be described below, and a value reflected by a communication operation is output from the serial data output pin.

For channel n, whose serial output is stopped, the SOmn bit value of the SOm register can be set by software, and that value can be output from the serial data output pin. In this way, any waveform of the start condition and stop condition can be created by software.

The SOEm register can be set by a 16-bit memory manipulation instruction.

The lower 8 bits of the SOEm register can be set with a 1-bit or 8-bit memory manipulation instruction with SOEmL.

Reset signal generation clears the SOEm register to 0000H.

Figure 13-15. Format of Serial Output Enable Register m (SOEm)

Address: F012AH, F012BH (SOE0) After reset: 0000H R/W

Symbol	15	14	13	12	11	10	9	8	7	6	5	4	3	2	1	0
SOE0	0	0	0	0	0	0	0	0	0	0	0	0	0	SOE02	0	SOE00

Address: F016AH, F016BH (SOE1) After reset: 0000H R/W

Symbol	15	14	13	12	11	10	9	8	7	6	5	4	3	2	1	0
SOE1	0	0	0	0	0	0	0	0	0	0	0	0	0	0	SOE11	SOE10

SOEmn	Serial output enable/stop of channel n
0	Stops output by serial communication operation.
1	Enables output by serial communication operation.

Caution Be sure to clear bits 15 to 3 and 1 of the SOE0 register and bits 15 to 2 of the SOE1 register to "0".

Remark m: Unit number (m = 0, 1), n: Channel number (n = 0, 2 for m = 0, n = 0, 1 for m = 1)

13.3.12 Serial output register m (SOm)

The SOm register is a buffer register for serial output of each channel.

The value of the SOmn bit of this register is output from the serial data output pin of channel n.

The value of the CKOmn bit of this register is output from the serial clock output pin of channel n.

The SOmn bit of this register can be rewritten by software only when serial output is disabled (SOEmn = 0). When serial output is enabled (SOEmn = 1), rewriting by software is ignored, and the value of the register can be changed only by a serial communication operation.

The CKOmn bit of this register can be rewritten by software only when the channel operation is stopped (SEmn = 0). While channel operation is enabled (SEmn = 1), rewriting by software is ignored, and the value of the CKOmn bit can be changed only by a serial communication operation.

To use the pin for serial interface as a port function pin, set the corresponding CKOmn and SOmn bits to “1”.

The SOm register can be set by a 16-bit memory manipulation instruction.

Reset signal generation clears the SOm register to 0F0FH.

Figure 13-16. Format of Serial Output Register m (SOm)

Address: F0128H, F0129H (SO0) After reset: 0F0FH R/W

Symbol	15	14	13	12	11	10	9	8	7	6	5	4	3	2	1	0
SO0	0	0	0	0	0	CKO 02	0	CKO 00	0	0	0	0	0	SO 02	0	SO 00

Address: F0168H, F0169H (SO1) After reset: 0F0FH R/W

Symbol	15	14	13	12	11	10	9	8	7	6	5	4	3	2	1	0
SO1	0	0	0	0	0	0	CKO 11	CKO 10	0	0	0	0	0	0	SO 11	SO 10

CKO mn	Serial clock output of channel n
0	Serial clock output value is “0”.
1	Serial clock output value is “1”.

SO mn	Serial data output of channel n
0	Serial data output value is “0”.
1	Serial data output value is “1”.

Caution Be sure to clear bits 15 to 11, 9, and 7 to 3, 1 of the SO0 register to “0”.
Be sure to clear bits 15 to 10 and 7 to 2 of the SO1 register to “0”.

Remark m: Unit number (m = 0, 1), n: Channel number (n = 0, 2 for m = 0, n = 0, 1 for m = 1)

13.3.13 Serial output level register m (SOLm)

The SOLm register is a register that is used to set inversion of the data output level of each channel.

This register can be set only in the UART mode. Be sure to set 0 for corresponding bit in the CSI mode and simplifies I^2C mode.

Inverting channel n by using this register is reflected on pin output only when serial output is enabled (SOEmn = 1). When serial output is disabled (SOEmn = 0), the value of the SOmn bit is output as is.

Rewriting the SOLm register is prohibited when the register is in operation (when SEmn = 1).

The SOLm register can be set by a 16-bit memory manipulation instruction.

The lower 8 bits of the SOLm register can be set with an 8-bit memory manipulation instruction with SOLmL.

Reset signal generation clears the SOLm register to 0000H.

Figure 13-17. Format of Serial Output Level Register m (SOLm)

Address: F0134H, F0135H (SOL0) After reset: 0000H R/W

Symbol	15	14	13	12	11	10	9	8	7	6	5	4	3	2	1	0
SOL0	0	0	0	0	0	0	0	0	0	0	0	0	0	SOL02	0	SOL00

SOLmn	Selects inversion of the level of the transmit data of channel n in UART mode
0	Communication data is output as is.
1	Communication data is inverted and output.

Caution Be sure to clear bits 15 to 3 and 1 of the SOL0 register to "0".

Remark m: Unit number (m = 0), n: Channel number (n = 0, 2)

Figure 13-18 shows examples in which the level of transmit data is reversed during UART transmission.

Figure 13-18. Examples of Reverse Transmit Data

(a) Non-reverse Output (SOLmn = 0)

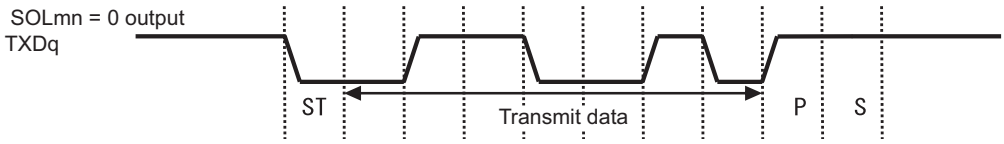

(b) Reverse Output (SOLmn = 1)

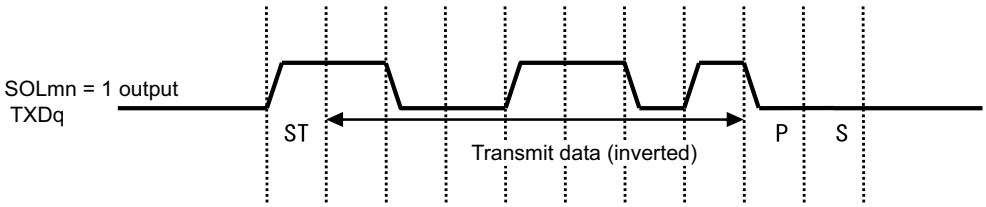

Remark m: Unit number (m = 0), n: Channel number (n = 0, 2)

13.3.14 Serial standby control register 0 (SSC0)

The SSC0 register is used to control the startup of reception (the SNOOZE mode) while in the STOP mode when receiving CSI00 or UART0 serial data.

The SSC0 register can be set by a 16-bit memory manipulation instruction.

The lower 8 bits of the SSC0 register can be set with an 8-bit memory manipulation instruction with SSC0L.

Reset signal generation clears the SSC0 register to 0000H.

Caution The transfer rate in the SNOOZE mode is as follows.

- **When using CSI00 : Up to 1 Mbps**
- **When using UART0 : 4800 bps only**

Figure 13-19. Format of Serial Standby Control Register 0 (SSC0)

Address: F0138H (SSC0) After reset: 0000H R/W

Symbol	15	14	13	12	11	10	9	8	7	6	5	4	3	2	1	0
SSC0	0	0	0	0	0	0	0	0	0	0	0	0	0	0	SSEC0	SWC0

SSEC0	Selection of whether to enable or stop the generation of transfer end interrupts
0	Enable the generation of error interrupts (INTSRE0/INTSRE2).
1	Disable the generation of error interrupts (INTSRE0/INTSRE2).
● The SSEC0 bit can be set to 1 or 0 only when both the SWC0 and EOCmn bits are set to 1 during UART reception in the SNOOZE mode. In other cases, clear the SSEC0 bit to 0. ● Setting SSEC0, SWC0 = 1, 0 is prohibited.	

SWC0	Setting of the SNOOZE mode
0	Do not use the SNOOZE mode function.
1	Use the SNOOZE mode function.
● When there is a hardware trigger signal in the STOP mode, the STOP mode is exited, and A/D conversion is performed without operating the CPU (the SNOOZE mode). ● The SNOOZE mode function can only be specified when the high-speed on-chip oscillator clock is selected for the CPU/peripheral hardware clock (f_{CLK}). If any other clock is selected, specifying this mode is prohibited. ● Even when using SNOOZE mode, be sure to set the SWCm bit to 0 in normal operation mode and change it to 1 just before shifting to STOP mode. Also, be sure to change the SWCm bit to 0 after returning from STOP mode to normal operation mode.	

Figure 13-20. Interrupt in UART Reception Operation in SNOOZE Mode

EOCmn Bit	SSECm Bit	Reception Ended Successfully	Reception Ended in an Error
0	0	INTSR0 is generated.	INTSR0 is generated.
0	1	INTSR0 is generated.	INTSR0 is generated.
1	0	INTSR0 is generated.	INTSRE0 is generated.
1	1	INTSR0 is generated.	No interrupt is generated.

13.3.15 Noise filter enable register 0 (NFEN0)

The NFEN0 register is used to set whether the noise filter can be used for the input signal from the serial data input pin to each channel.

Disable the noise filter of the pin used for CSI or simplified I^2C communication, by clearing the corresponding bit of this register to 0.

Enable the noise filter of the pin used for UART communication, by setting the corresponding bit of this register to 1.

When the noise filter is enabled, after synchronization is performed with the operation clock (f_{MCK}) of the target channel, 2-clock match detection is performed. When the noise filter is disabled, only synchronization is performed with the operation clock (f_{MCK}) of the target channel.

The NFEN0 register can be set by a 1-bit or 8-bit memory manipulation instruction.

Reset signal generation clears the NFEN0 register to 00H.

Figure 13-21. Format of Noise Filter Enable Register 0 (NFEN0)

Address: F0070H After reset: 00H R/W

Symbol	7	6	5	4	3	2	1	0
NFEN0	0	0	0	0	0	SNFEN10	0	SNFEN00

SNFEN10	Use of noise filter of RxD1 pin (RXD1/ANI16/SI20/SDA20/P03)
0	Noise filter OFF
1	Noise filter ON
Set the SNFEN10 bit to 1 to use the RxD1 pin. Clear the SNFEN10 bit to 0 to use the other than RxD1 pin.	

SNFEN00	Use of noise filter of RxD0 pin (RXD0/TOOLRXD/SDA00/SI00/P11)
0	Noise filter OFF
1	Noise filter ON
Set the SNFEN00 bit to 1 to use the RxD0 pin. Clear the SNFEN00 bit to 0 to use the other than RxD0 pin.	

Caution Be sure to clear bits 7 to 3 and 1 to "0".

13.3.16 Registers controlling port functions of serial input/output pins

Using the serial array unit requires setting of the registers that control the port functions

multiplexed on the target channel (port mode register (PMxx), port register (Pxx), port input mode register (PIMxx), port output mode register (POMxx), port mode control register (PMCxx)).

For details, see **5.3.1 Port mode registers (PMxx)**, **5.3.2 Port registers (Pxx)**, **5.3.4 Port input mode registers (PIMxx)**, **5.3.5 Port output mode registers (POMxx)**, and **5.3.6 Port mode control registers (PMCxx)**.

Specifically, using a port pin with a multiplexed serial data or serial clock output function (e.g. P02/ANI17/TXD1) for serial data or serial clock output, requires setting the corresponding bits in the port mode control register (PMCxx) and port mode register (PMxx) to 0, and the corresponding bit in the port register (Pxx) to 1.

When using the port pin in N-ch open-drain output (V_{DD} tolerance) mode, set the corresponding bit in the port output mode register (POMxx) to 1. When connecting an external device operating on a different potential (1.8 V or 2.5 V), see **5.4.5 Handling different potential (1.8 V, 2.5 V) by using I/O buffers**.

Example When P02/ANI17/TxD1 is to be used for serial data output
Set the PMC02 bit of port mode control register 0 to 0.
Set the PM02 bit of port mode register 0 to 0.
Set the P02 bit of port register 0 to 1.

Specifically, using a port pin with a multiplexed serial data or serial clock input function (e.g. P03/ANI16/RxD1) for serial data or serial clock input, requires setting the corresponding bit in the port mode register (PMxx) to 1, and the corresponding bit in the port mode control register (PMCxx) to 0. In this case, the corresponding bit in the port register (Pxx) can be set to 0 or 1.

When the TTL input buffer is selected, set the corresponding bit in the port input mode register (PIMxx) to 1. When connecting an external device operating on a different potential (1.8 V or 2.5 V), see **5.4.5 Handling different potential (1.8 V, 2.5 V) by using I/O buffers**.

Example When P03/ANI16/RxD1 is to be used for serial data input
Set the PMC03 bit of port mode control register 0 to 0.
Set the PM03 bit of port mode register 0 to 1.
Set the P03 bit of port register 0 to 0 or 1.

13.4 Operation stop mode

Each serial interface of serial array unit has the operation stop mode.
In this mode, serial communication cannot be executed, thus reducing the power consumption.
In addition, the pin for serial interface can be used as port function pins in this mode.

13.4.1 Stopping the operation by units

The stopping of the operation by units is set by using peripheral enable register 0 (PER0).

The PER0 register is used to enable or disable supplying the clock to the peripheral hardware. Clock supply to a hardware macro that is not used is stopped in order to reduce the power consumption and noise.

To stop the operation of serial array unit 0, set bit 2 (SAU0EN) to 0.

To stop the operation of serial array unit 1, set bit 3 (SAU1EN) to 0.

Figure 13-22. Peripheral Enable Register 0 (PER0) Setting When Stopping the Operation by Units

(a) Peripheral enable register 0 (PER0) … Set only the bit of SAUm to be stopped to 0.

	7	6	5	4	3	2	1	0
PER0	RTCEN		ADCEN	IICA0EN	SAU1EN	SAU0EN		TAU0EN
	×	0	×	×	0/1	0/1	0	×

Control of SAUm input clock
0: Stops supply of input clock
1: Supplies input clock

Cautions. 1 If SAUmEN = 0, writing to a control register of serial array unit m is ignored, and, even if the register is read, only the default value is read
Note that this does not apply to the following registers.
- **Noise filter enable register 0 (NFEN0)**
- **Port input mode registers 0, 1 (PIM0, PIM1)**
- **Port output mode registers 0, 1 (POM0, POM1)**
- **Port mode control register 0 (PMC0)**
- **Port mode registers 0, 1, 7 (PM0, PM1, PM7)**
- **Port registers 0, 1, 7 (P0, P1, P7)**

2. Be sure to clear the bits 6 and 1 to 0.

Remark ×: Bits not used with serial array units (depending on the settings of other peripheral functions)
0/1: Set to 0 or 1 depending on the usage of the user

13.4.2 Stopping the operation by channels

The stopping of the operation by channels is set using each of the following registers.

Figure 13-23. Each Register Setting When Stopping the Operation by Channels

(a) Serial channel stop register m (STm) … This register is a trigger register that is used to enable stopping communication/count by each channel.

	15	14	13	12	11	10	9	8	7	6	5	4	3	2	1	0
STm	0	0	0	0	0	0	0	0	0	0	0	0	STm3 Note 0/1	STm2 Note 0/1	STm1 0/1	STm0 0/1

1: Clears the SEmn bit to 0 and stops the communication operation

* Because the STmn bit is a trigger bit, it is cleared immediately when SEmn = 0.

(b) Serial Channel Enable Status Register m (SEm) … This register indicates whether data transmission/reception operation of each channel is enabled or stopped.

	15	14	13	12	11	10	9	8	7	6	5	4	3	2	1	0
SEm	0	0	0	0	0	0	0	0	0	0	0	0	SEm3 Note 0/1	SEm2 Note 0/1	SEm1 0/1	SEm0 0/1

0: Operation stops

* The SEm register is a read-only status register, whose operation is stopped by using the STm register. With a channel whose operation is stopped, the value of the CKOmn bit of the SOm register can be set by software.

(c) Serial output enable register m (SOEm) … This register is a register that is used to enable or stop output of the serial communication operation of each channel.

	15	14	13	12	11	10	9	8	7	6	5	4	3	2	1	0
SOEm	0	0	0	0	0	0	0	0	0	0	0	0	SOEm3 Note 0/1	SOEm2 Note 0/1	SOEm1 0/1	SOEm0 0/1

0: Stops output by serial communication operation

* For channel n, whose serial output is stopped, the SOmn bit value of the SOm register can be set by software.

(d) Serial output register m (SOm) …This register is a buffer register for serial output of each channel.

	15	14	13	12	11	10	9	8	7	6	5	4	3	2	1	0
SOm	0	0	0	0	CKOm3 Note 0/1	CKOm2 Note 0/1	CKOm1 0/1	CKOm0 0/1	0	0	0	0	SOm3 Note 0/1	SOm2 Note 0/1	SOm1 0/1	SOm0 0/1

1: Serial clock output value is "1" 1: Serial data output value is "1"

* When using pins corresponding to each channel as port function pins, set the corresponding CKOmn, SOmn bits to "1".

Remarks 1. m: Unit number (m = 0, 1), n: Channel number (n = 0 to 3 for m = 0, n = 0, 1 for m = 1)

2. ▒ : Setting disabled (fixed by hardware), 0/1: Set to 0 or 1 depending on the usage of the user

13.5 Operation of 3-Wire Serial I/O (CSI00, CSI20, CSI21) Communication

This is a clocked communication function that uses three lines: serial clock (SCK) and serial data (SI and SO) lines.

[Data transmission/reception]

- Data length of 7 or 8 bits
- Phase control of transmit/receive data
- MSB/LSB first selectable

[Clock control]

- Master/slave selection
- Phase control of I/O clock
- Setting of transfer period by prescaler and internal counter of each channel
- Maximum transfer rate[Note]

  During master communication: Max. $f_{CLK}/2$ (CSI00 only)
  Max. $f_{CLK}/4$
  During slave communication: Max. $f_{MCK}/6$

[Interrupt function]

- Transfer end interrupt/buffer empty interrupt

[Error detection flag]

- Overrun error

In addition, CSI00 of following channels supports the SNOOZE mode. When SCK input is detected while in the STOP mode, the SNOOZE mode makes data reception that does not require the CPU possible.

Note Use the clocks within a range satisfying the SCK cycle time (t_{KCY}) characteristics For details, see **CHAPTER 30 ELECTRICAL SPECIFICATIONS**.

The channels supporting 3-wire serial I/O (CSI00, CSI20, CSI21) are channels 0 and 2 of SAU0 and channel 1 of SAU1.

Unit	Channel	Used as CSI	Used as UART	Used as Simplified I^2C
0	0	CSI00	UART0	IIC00
	1	–		–
	2	–	UART1	–
	3	–		–
1	0	CSI20	–	IIC20
	1	CSI21[Note]		–

3-wire serial I/O (CSI00, CSI20, CSI21) performs the following eight types of communication operations.

- Master transmission (See **13.5.1**.)
- Master reception (See **13.5.2**.)
- Master transmission/reception (See **13.5.3**.)
- Slave transmission (See **13.5.4**.)
- Slave reception (See **13.5.5**.)
- Slave transmission/reception (See **13.5.6**.)
- SNOOZE mode function (See **13.5.7**.)
- CSI21 transmission/reception (See **2.2**.)

Note For internal communication between MCU and RF transceiver.

13.5.1 Master transmission

Master transmission is that the RL78 microcontroller outputs a transfer clock and transmits data to another device.

3-Wire Serial I/O	CSI00	CSI20	CSI21
Target channel	Channel 0 of SAU0	Channel 0 of SAU1	Channel 1 of SAU1
Pins used	SCK00, SO00	SCK20, SO20	SCK21, SO21 (internal pins)
Interrupt[Note 1]	INTCSI00	INTCSI20	INTCSI21
	Transfer end interrupt (in single-transfer mode) or buffer empty interrupt (in continuous transfer mode) can be selected.		
Error detection flag[Note 1]	None		
Transfer data length[Note 1]	7 or 8 bits		
Transfer rate[Notes 1, 2]	Max. f_{CLK} /2 [Hz] (CSI00 only), f_{CLK} /4 [Hz] Min. $f_{CLK}/(2 \times 2^{15} \times 128)$ [Hz] f_{CLK}: System clock frequency		
Data phase[Note 1]	Selectable by the DAPmn bit of the SCRmn register ● DAPmn = 0: Data output starts from the start of the operation of the serial clock. ● DAPmn = 1: Data output starts half a clock before the start of the serial clock operation.		
Clock phase[Note 1]	Selectable by the CKPmn bit of the SCRmn register ● CKPmn = 0: Non-reverse ● CKPmn = 1: Reverse		
Data direction[Note 1]	MSB or LSB first		

Notes 1. CSI21 is for communication between MCU and RF transceiver. For operation setting, see **2.2 Communication Interface between MCU and RF Transceiver**.

2. Use this operation within a range that satisfies the conditions above and the peripheral functions characteristics in the electrical specifications (see **CHAPTER 30 ELECTRICAL SPECIFICATIONS**).

Remark m: Unit number (m = 0, 1), n: Channel number (n = 0 for m = 0, n = 0, 1 for m = 1), mn = 00, 10, 11

(1) Register setting

Figure 13-24. Example of Contents of Registers for Master Transmission of 3-Wire Serial I/O (CSI00, CSI20, CSI21) (1/2)

(a) Serial mode register mn (SMRmn)

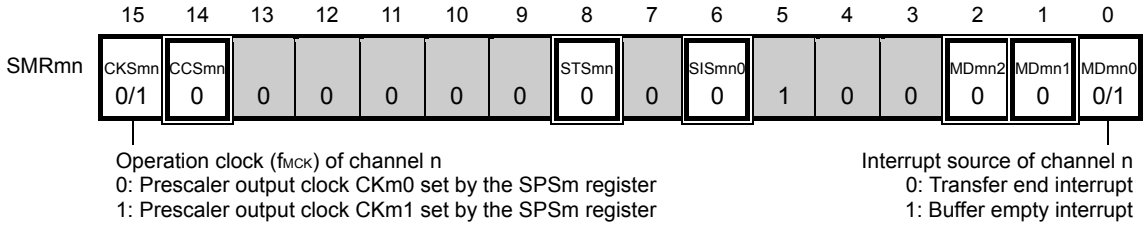

(b) Serial communication operation setting register mn (SCRmn)

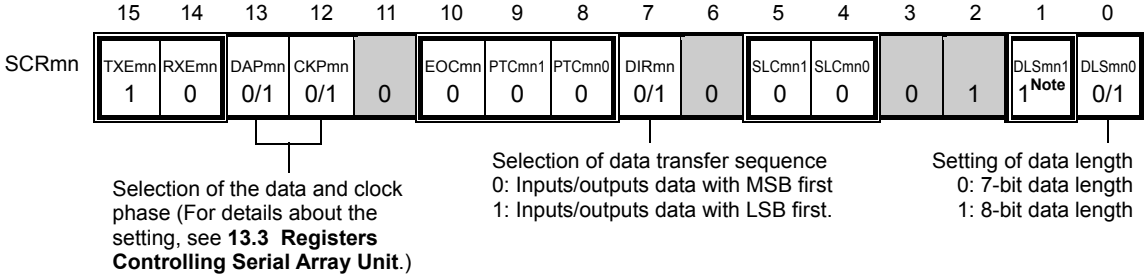

(c) Serial data register mn (SDRmn) (lower 8 bits: SIOp)

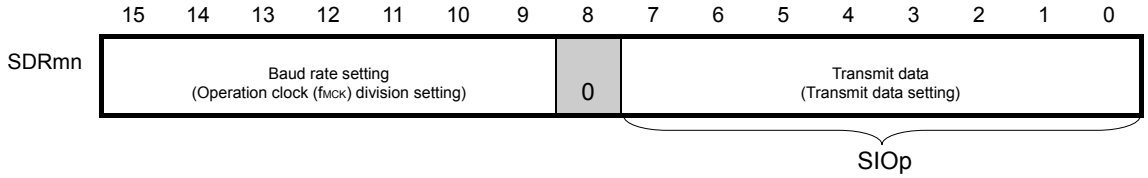

(d) Serial output register m (SOm) … Sets only the bits of the target channel.

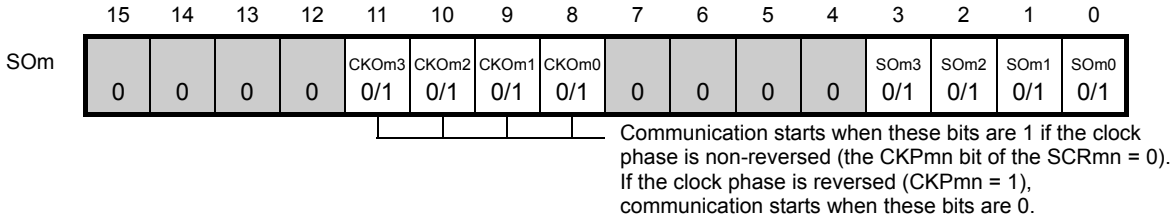

Note Only provided for the SCR00, SCR01, SCR10 and SCR11 registers. This bit is fixed to 1 for the other registers.

Remarks 1. m: Unit number (m = 0, 1), n: Channel number (n = 0 for m = 0, n = 0, 1 for m = 1), p: CSI number (p = 00, 20, 21), mn = 00, 10, 11

2. ☐: Setting is fixed in the CSI master transmission mode, ▒: Setting disabled (set to the initial value)
0/1: Set to 0 or 1 depending on the usage of the user

Figure 13-24. Example of Contents of Registers for Master Transmission of 3-Wire Serial I/O (CSI00, CSI20, CSI21) (2/2)

(e) Serial output enable register m (SOEm) … Sets only the bits of the target channel to 1.

	15	14	13	12	11	10	9	8	7	6	5	4	3	2	1	0
SOEm	0	0	0	0	0	0	0	0	0	0	0	0	SOEm3 0/1	SOEm2 0/1	SOEm1 0/1	SOEm0 0/1

(f) Serial channel start register m (SSm) … Sets only the bits of the target channel to 1.

	15	14	13	12	11	10	9	8	7	6	5	4	3	2	1	0
SSm	0	0	0	0	0	0	0	0	0	0	0	0	SSm3 0/1	SSm2 0/1	SSm1 0/1	SSm0 0/1

Remarks 1. m: Unit number (m = 0, 1), n: Channel number (n = 0 for m = 0, n = 0, 1 for m = 1),
p: CSI number (p = 00, 20, 21), mn = 00, 10, 11

2. ▒: Setting disabled (set to the initial value)
×: Bit that cannot be used in this mode (set to the initial value when not used in any mode)
0/1: Set to 0 or 1 depending on the usage of the user

(2) Operation procedure

Figure 13-25. Initial Setting Procedure for Master Transmission

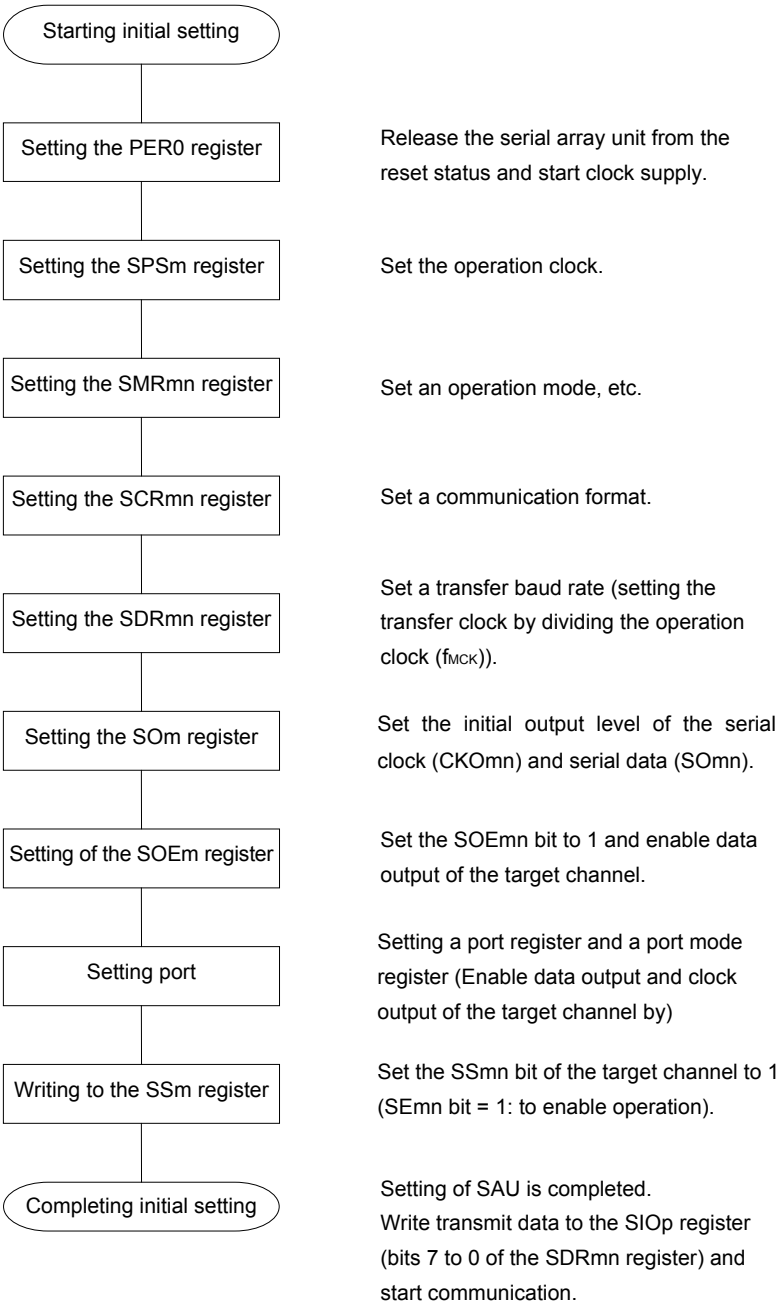

Figure 13-26. Procedure for Stopping Master Transmission

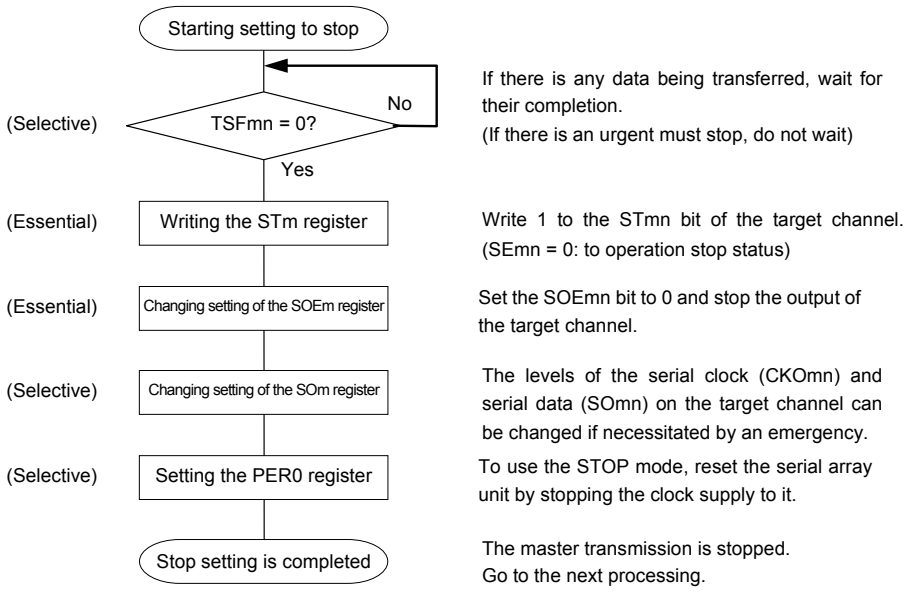

Figure 13-27. Procedure for Resuming Master Transmission

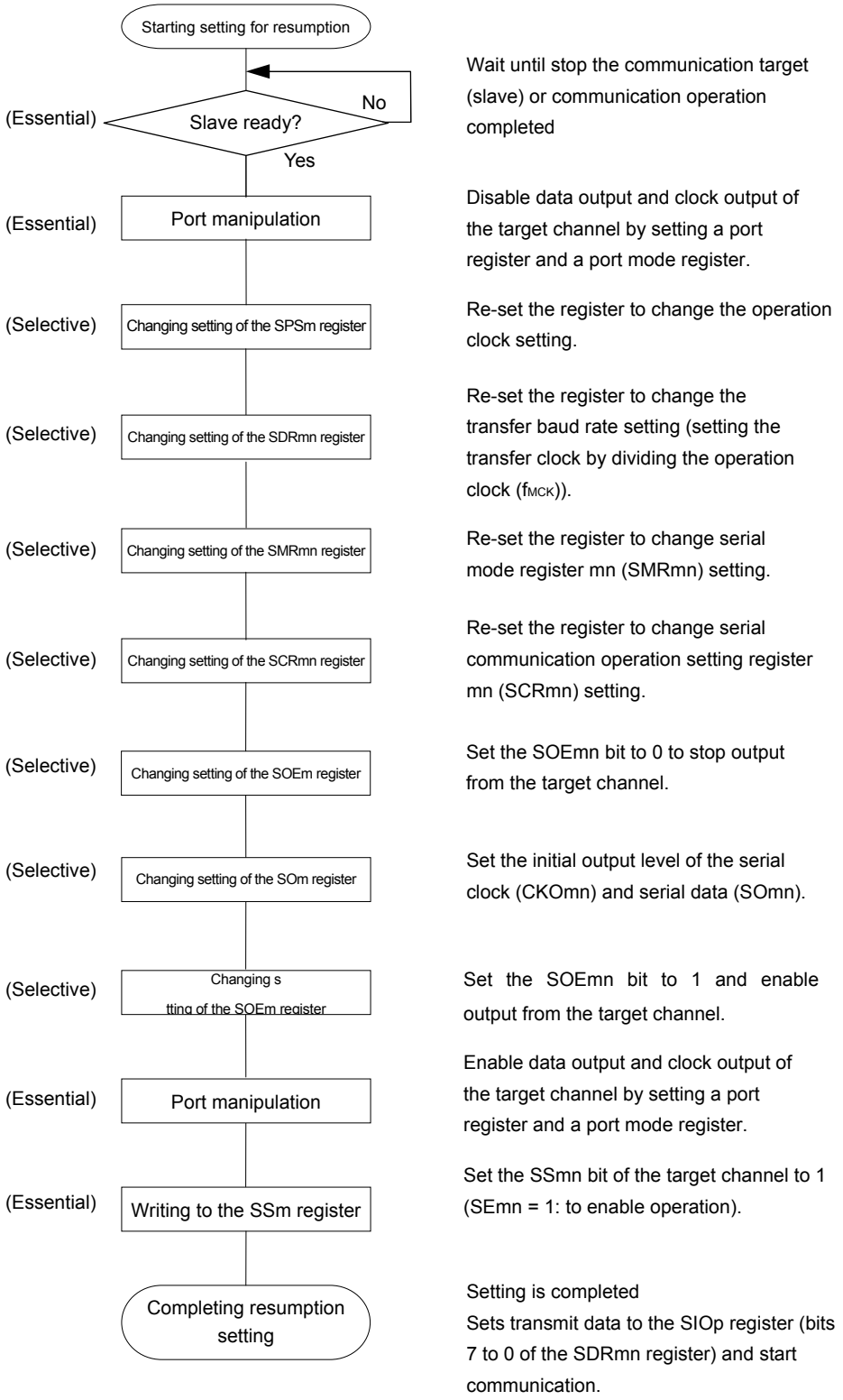

Remark If PER0 is rewritten while stopping the master transmission and the clock supply is stopped, wait until the transmission target (slave) stops or transmission finishes, and then perform initialization instead of restarting the transmission.

(3) Processing flow (in single-transmission mode)

Figure 13-28. Timing Chart of Master Transmission (in Single-Transmission Mode)
(Type 1: DAPmn = 0, CKPmn = 0)

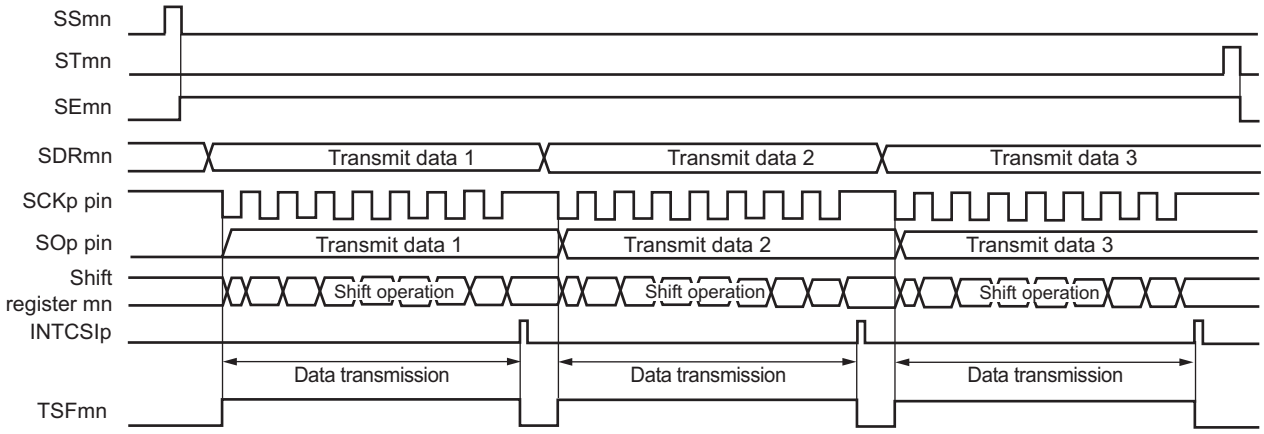

Remark m: Unit number (m = 0, 1), n: Channel number (n = 0 for m = 0, n = 0, 1 for m = 1),
p: CSI number (p = 00, 20, 21), mn = 00, 10, 11

Figure 13-29. Flowchart of Master Transmission (in Single-Transmission Mode)

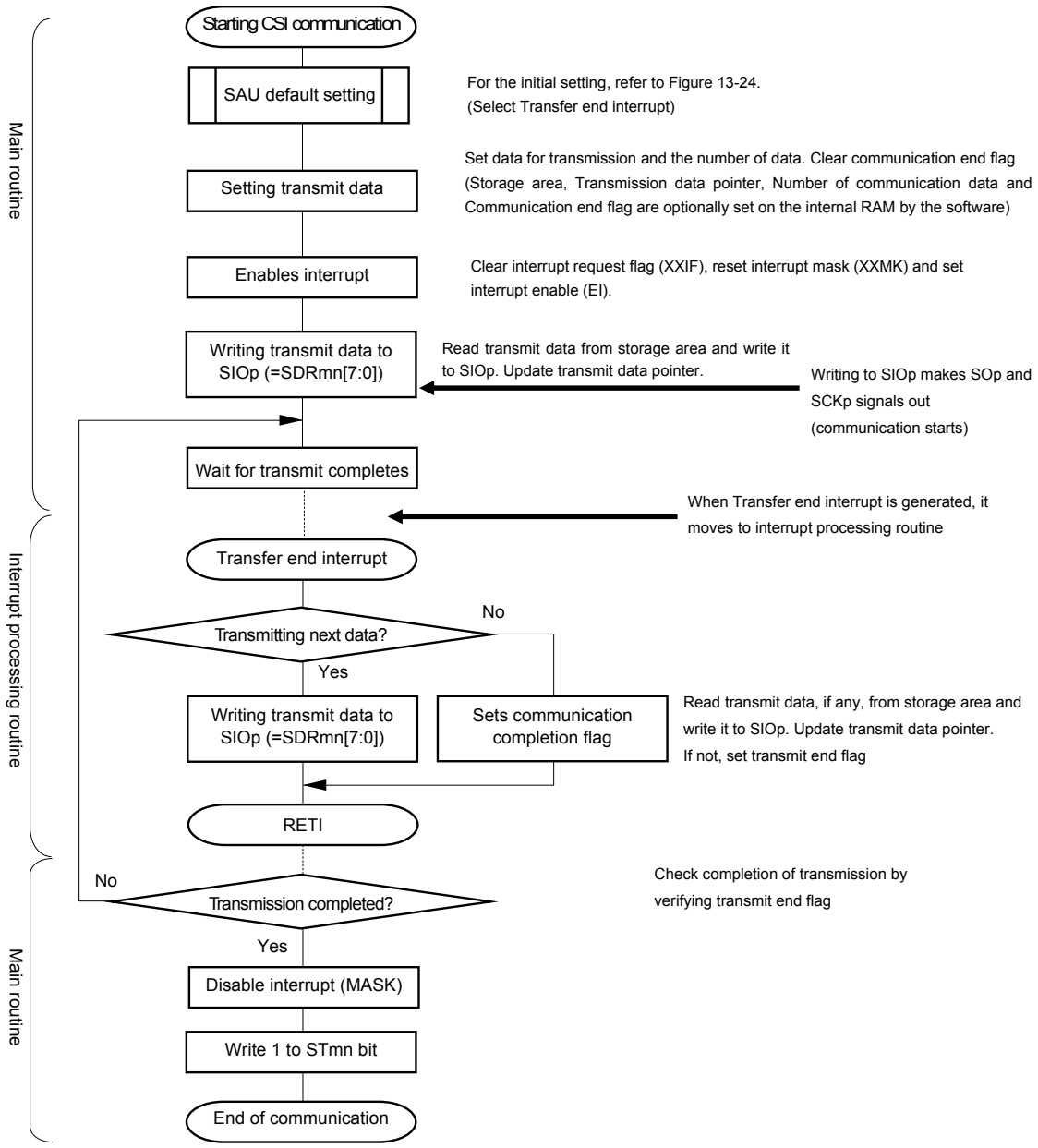

(4) Processing flow (in continuous transmission mode)

Figure 13-30. Timing Chart of Master Transmission (in Continuous Transmission Mode)
(Type 1: DAPmn = 0, CKPmn = 0)

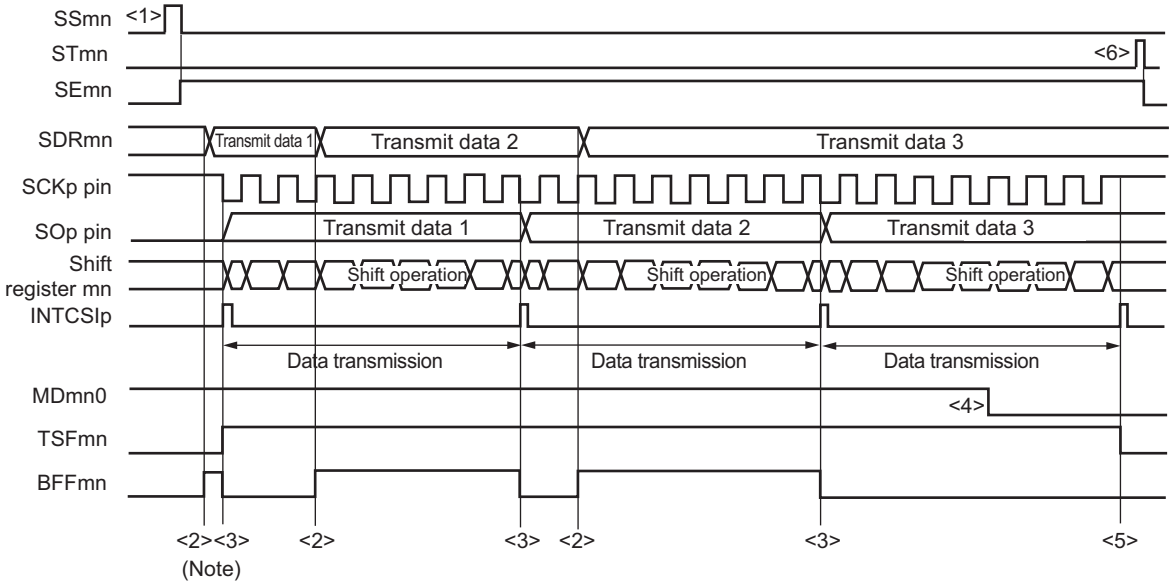

Note If transmit data is written to the SDRmn register while the BFFmn bit of serial status register mn (SSRmn) is 1 (valid data is stored in serial data register mn (SDRmn)), the transmit data is overwritten.

Caution **The MDmn0 bit of serial mode register mn (SMRmn) can be rewritten even during operation. However, rewrite it before transfer of the last bit is started, so that it will be rewritten before the transfer end interrupt of the last transmit data.**

Remark m: Unit number (m = 0, 1), n: Channel number (n = 0 for m = 0, n = 0, 1 for m = 1),
p: CSI number (p = 00, 20, 21), mn = 00, 10, 11

Figure 13-31. Flowchart of Master Transmission (in Continuous Transmission Mode)

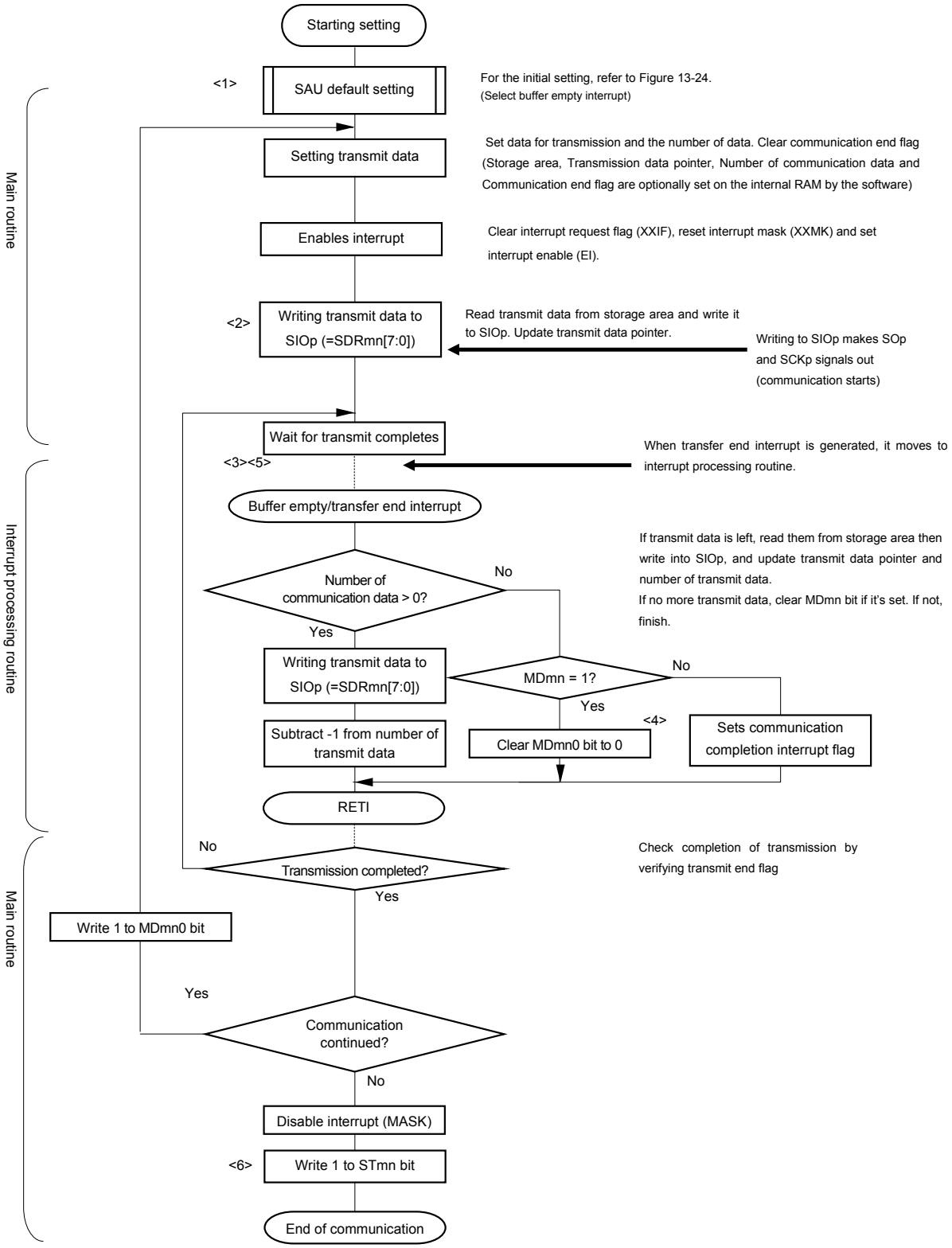

Remark <1> to <6> in the figure correspond to <1> to <6> in **Figure 13-30 Timing Chart of Master Transmission (in Continuous Transmission Mode)**.

13.5.2 Master reception

Master reception is that the RL78 microcontroller outputs a transfer clock and receives data from other device.

3-Wire Serial I/O	CSI00	CSI20	CSI21
Target channel	Channel 0 of SAU0	Channel 0 of SAU1	Channel 1 of SAU1
Pins used	SCK00, SI00	SCK20, SI20	–
Interrupt[Note 1]	INTCSI00	INTCSI20	–
	Transfer end interrupt (in single-transfer mode) or buffer empty interrupt (in continuous transfer mode) can be selected.		
Error detection flag[Note 1]	Overrun error detection flag (OVFmn) only		
Transfer data length[Note 1]	7 or 8 bits		
Transfer rate[Notes 1, 2]	Max. $f_{CLK}/2$ [Hz] (CSI00 only), $f_{CLK}/4$ [Hz] Min. $f_{CLK}/(2 \times 2^{15} \times 128)$ [Hz] f_{CLK}: System clock frequency		
Data phase[Note 1]	Selectable by the DAPmn bit of the SCRmn register ● DAPmn = 0: Data input starts from the start of the operation of the serial clock. ● DAPmn = 1: Data input starts half a clock before the start of the serial clock operation.		
Clock phase[Note 1]	Selectable by the CKPmn bit of the SCRmn register ● CKPmn = 0: Non-reverse ● CKPmn = 1: Reverse		
Data direction[Note 1]	MSB or LSB first		

Notes 1. CSI21 cannot be used for master reception.

2. Use this operation within a range that satisfies the conditions above and the peripheral functions characteristics in the electrical specifications (see **CHAPTER 30 ELECTRICAL SPECIFICATIONS**).

Remark m: Unit number (m = 0, 1), n: Channel number (n = 0), mn = 00, 10

(1) Register setting

Figure 13-32. Example of Contents of Registers for Master Reception of 3-Wire Serial I/O (CSI00, CSI20) (1/2)

(a) Serial mode register mn (SMRmn)

	15	14	13	12	11	10	9	8	7	6	5	4	3	2	1	0
SMRmn	CKSmn	CCSmn						STSmn		SISmn0				MDmn2	MDmn1	MDmn0
	0/1	0	0	0	0	0	0	0	0	0	1	0	0	0	0	0/1

Operation clock (f_{MCK}) of channel n
0: Prescaler output clock CKm0 set by the SPSm register
1: Prescaler output clock CKm1 set by the SPSm register

Interrupt source of channel n
0: Transfer end interrupt
1: Buffer empty interrupt

(b) Serial communication operation setting register mn (SCRmn)

	15	14	13	12	11	10	9	8	7	6	5	4	3	2	1	0
SCRmn	TXEmn	RXEmn	DAPmn	CKPmn		EOCmn	PTCmn1	PTCmn0	DIRmn		SLCmn1	SLCmn0			DLSmn1	DLSmn0
	0	1	0/1	0/1	0	0	0	0	0/1	0	0	0	0	1	1 Note	0/1

Selection of the data and clock phase (For details about the setting, see **13.3 Registers Controlling Serial Array Unit**.)

Selection of data transfer sequence
0: Inputs/outputs data with MSB first
1: Inputs/outputs data with LSB first.

Setting of data length
0: 7-bit data length
1: 8-bit data length

(c) Serial data register mn (SDRmn) (lower 8 bits: SIOp)

	15	14	13	12	11	10	9	8	7	6	5	4	3	2	1	0
SDRmn	Baud rate setting (Operation clock (f_{MCK}) division setting)							0	Receive data (Write FFH as dummy data.)							

SIOp

(d) Serial output register m (SOm) … Sets only the bits of the target channel.

	15	14	13	12	11	10	9	8	7	6	5	4	3	2	1	0
SOm					CKOm3	CKOm2	CKOm1	CKOm0					SOm3	SOm2	SOm1	SOm0
	0	0	0	0	0/1	0/1	0/1	0/1	0	0	0	0	×	×	×	×

Communication starts when these bits are 1 if the clock phase is non-reversed (the CKPmn bit of the SCRmn = 0). If the clock phase is reversed (CKPmn = 1), communication starts when these bits are 0.

Note Only provided for the SCR00, SCR01, SCR10 and SCR11 registers. This bit is fixed to 1 for the other registers.

Remarks 1. m: Unit number (m = 0, 1), n: Channel number (n = 0), p: CSI number (p = 00, 20), mn = 00, 10

2. □: Setting is fixed in the CSI master reception mode, ■: Setting disabled (set to the initial value)
×: Bit that cannot be used in this mode (set to the initial value when not used in any mode)
0/1: Set to 0 or 1 depending on the usage of the user

Figure 13-32. Example of Contents of Registers for Master Reception of 3-Wire Serial I/O (CSI00, CSI20) (2/2)

(e) Serial output enable register m (SOEm) …The register that not used in this mode.

	15	14	13	12	11	10	9	8	7	6	5	4	3	2	1	0
SOEm	0	0	0	0	0	0	0	0	0	0	0	0	SOEm3 ×	SOEm2 ×	SOEm1 ×	SOEm0 ×

(f) Serial channel start register m (SSm) … Sets only the bits of the target channel to 1.

	15	14	13	12	11	10	9	8	7	6	5	4	3	2	1	0
SSm	0	0	0	0	0	0	0	0	0	0	0	0	SSm3 0/1	SSm2 0/1	SSm1 0/1	SSm0 0/1

Remarks 1. m: Unit number (m = 0, 1), n: Channel number (n = 0), p: CSI number (p = 00, 20), mn = 00, 10

2. ▒ : Setting disabled (set to the initial value)

×: Bit that cannot be used in this mode (set to the initial value when not used in any mode)

0/1: Set to 0 or 1 depending on the usage of the user

(2) Operation procedure

Figure 13-33. Initial Setting Procedure for Master Reception

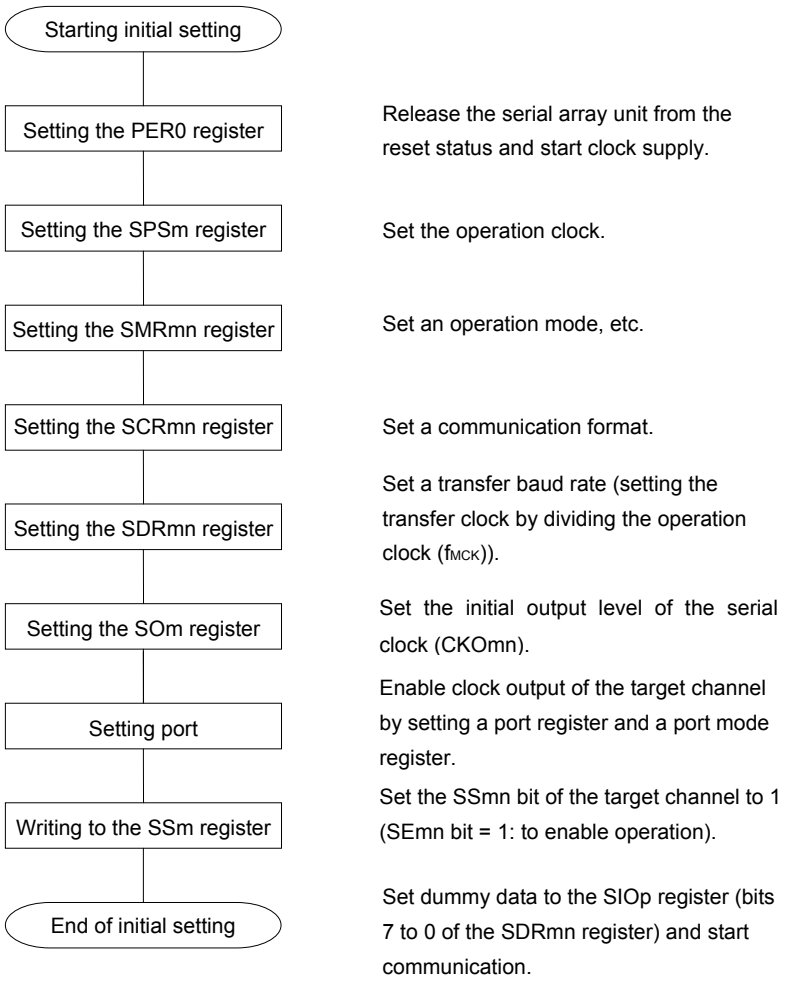

Figure 13-34. Procedure for Stopping Master Reception

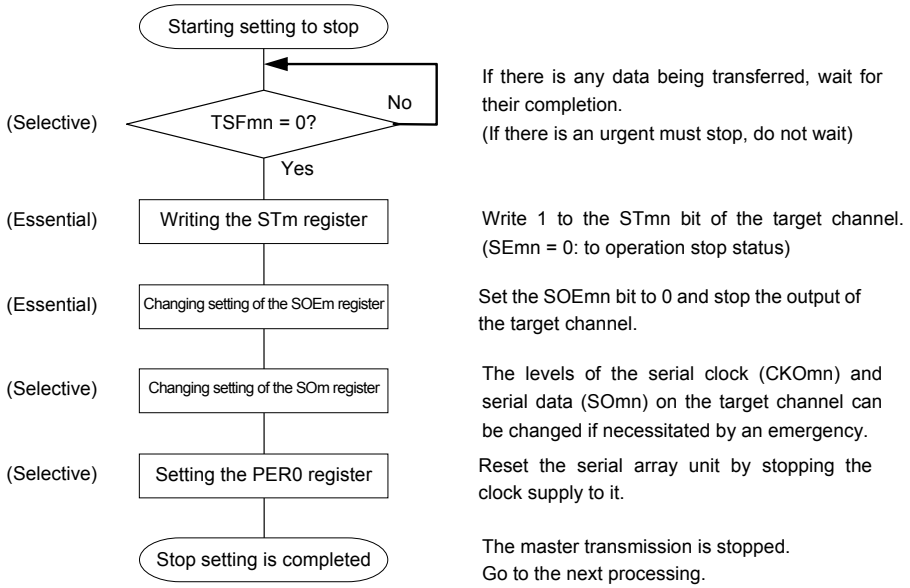

Figure 13-35. Procedure for Resuming Master Reception

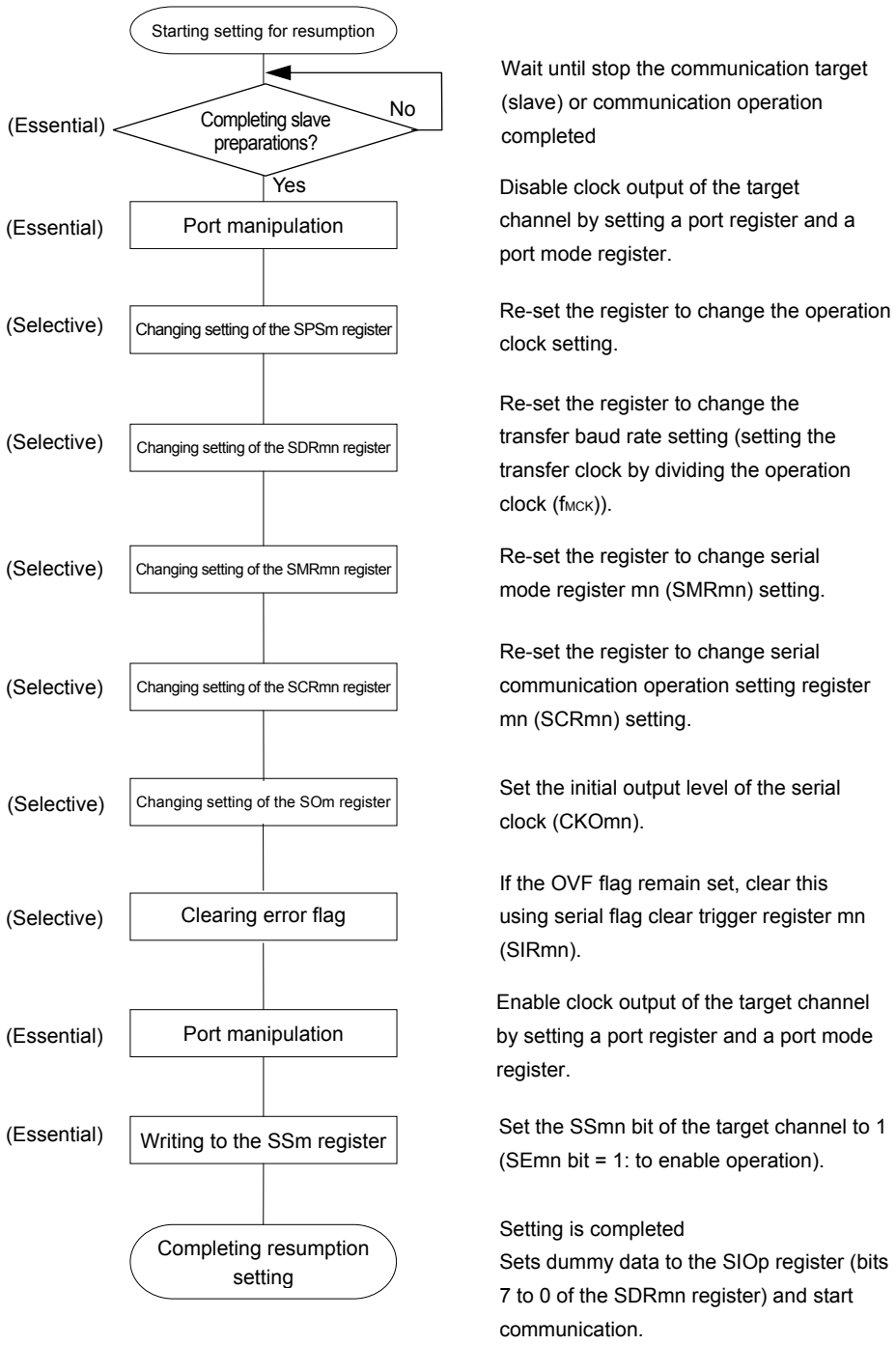

Remark If PER0 is rewritten while stopping the master transmission and the clock supply is stopped, wait until the transmission target (slave) stops or transmission finishes, and then perform initialization instead of restarting the transmission.

(3) Processing flow (in single-reception mode)

Figure 13-36. Timing Chart of Master Reception (in Single-Reception Mode)
(Type 1: DAPmn = 0, CKPmn = 0)

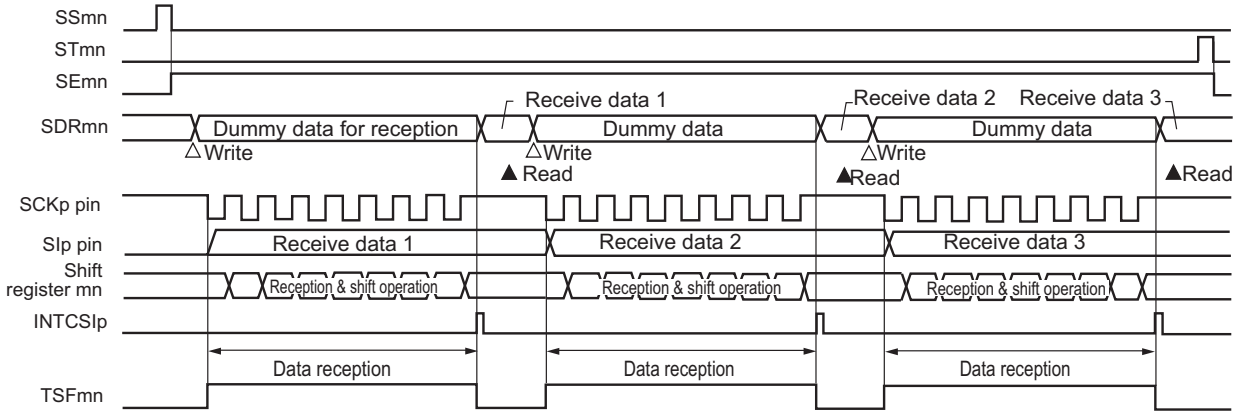

Remark m: Unit number (m = 0, 1), n: Channel number (n = 0), p: CSI number (p = 00, 20), mn = 00, 10

Figure 13-37. Flowchart of Master Reception (in Single-Reception Mode)

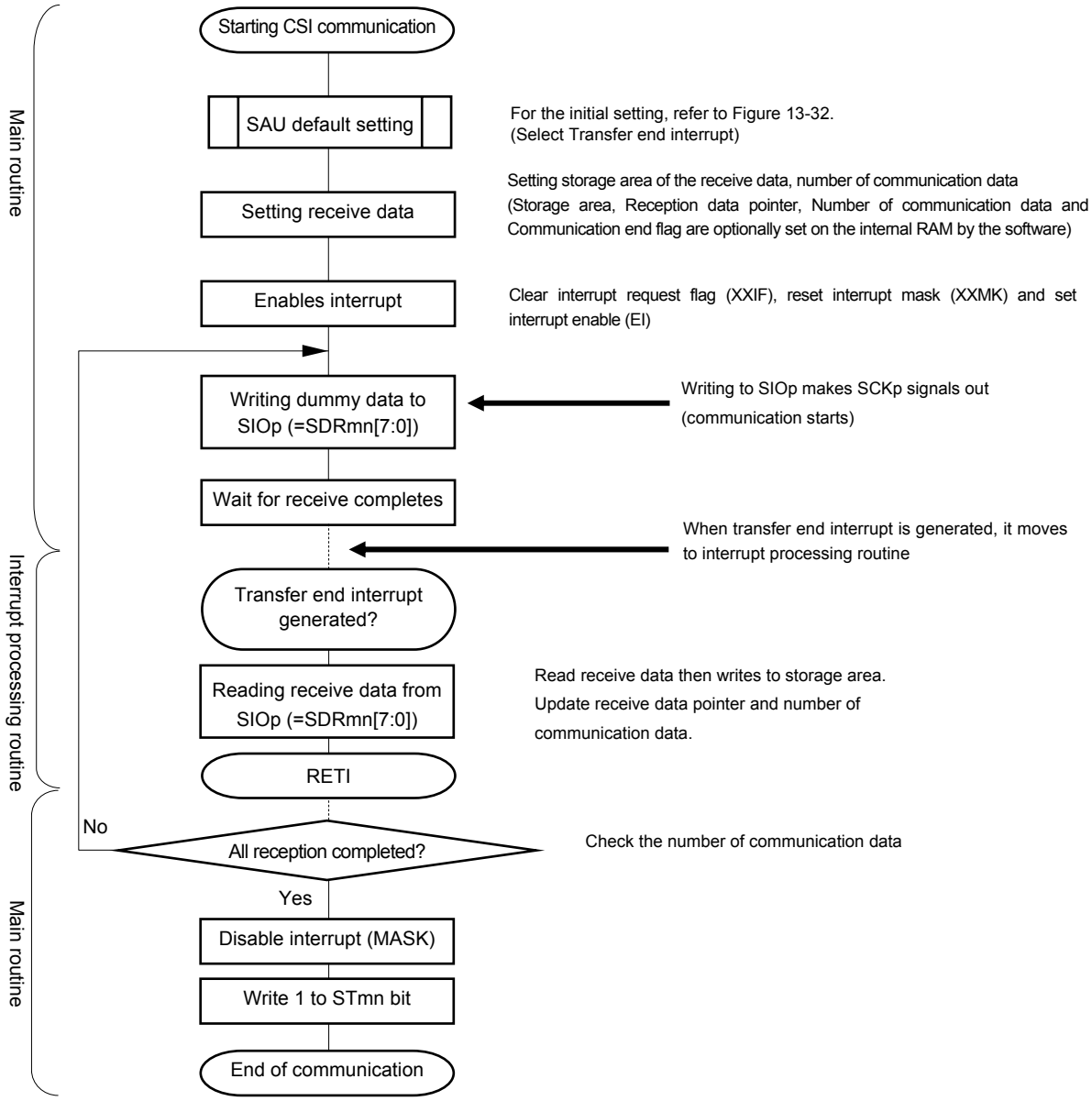

(4) Processing flow (in continuous reception mode)

Figure 13-38. Timing Chart of Master Reception (in Continuous Reception Mode) (Type 1: DAPmn = 0, CKPmn = 0)

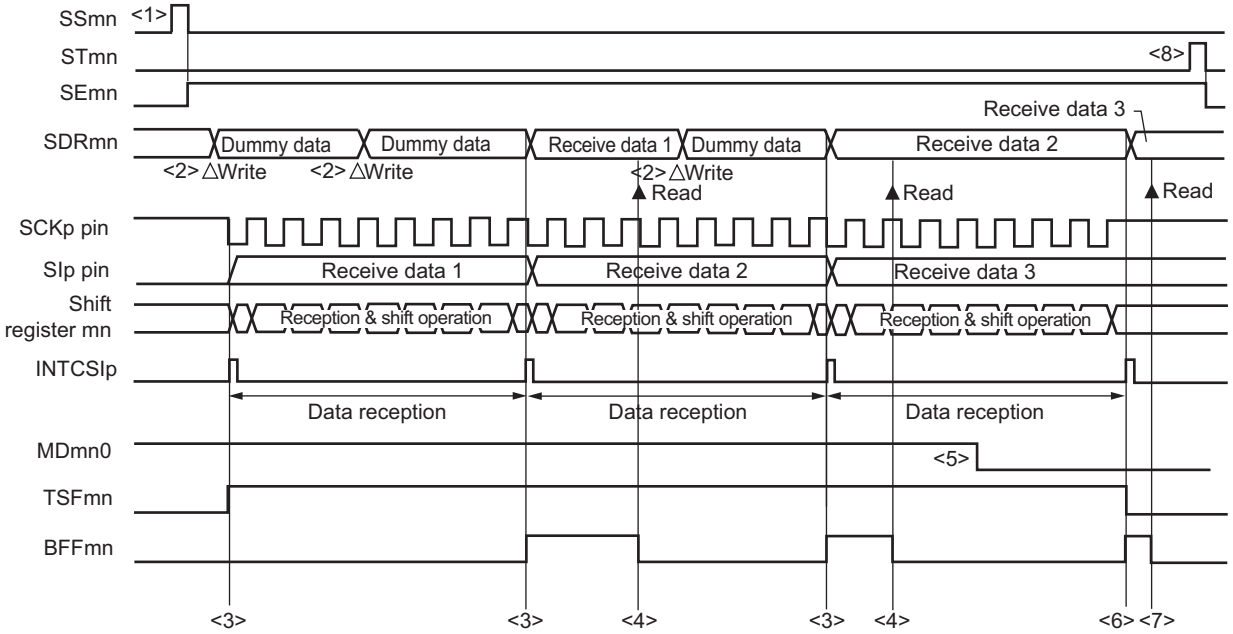

Caution The MDmn0 bit can be rewritten even during operation.
However, rewrite it before receive of the last bit is started, so that it has been rewritten before the transfer end interrupt of the last receive data.

Remarks 1. <1> to <8> in the figure correspond to <1> to <8> in **Figure 13-39 Flowchart of Master Reception (in Continuous Reception Mode)**.

2. m: Unit number (m = 0, 1), n: Channel number (n = 0), p: CSI number (p = 00, 20), mn = 00, 10

Figure 13-39. Flowchart of Master Reception (in Continuous Reception Mode)

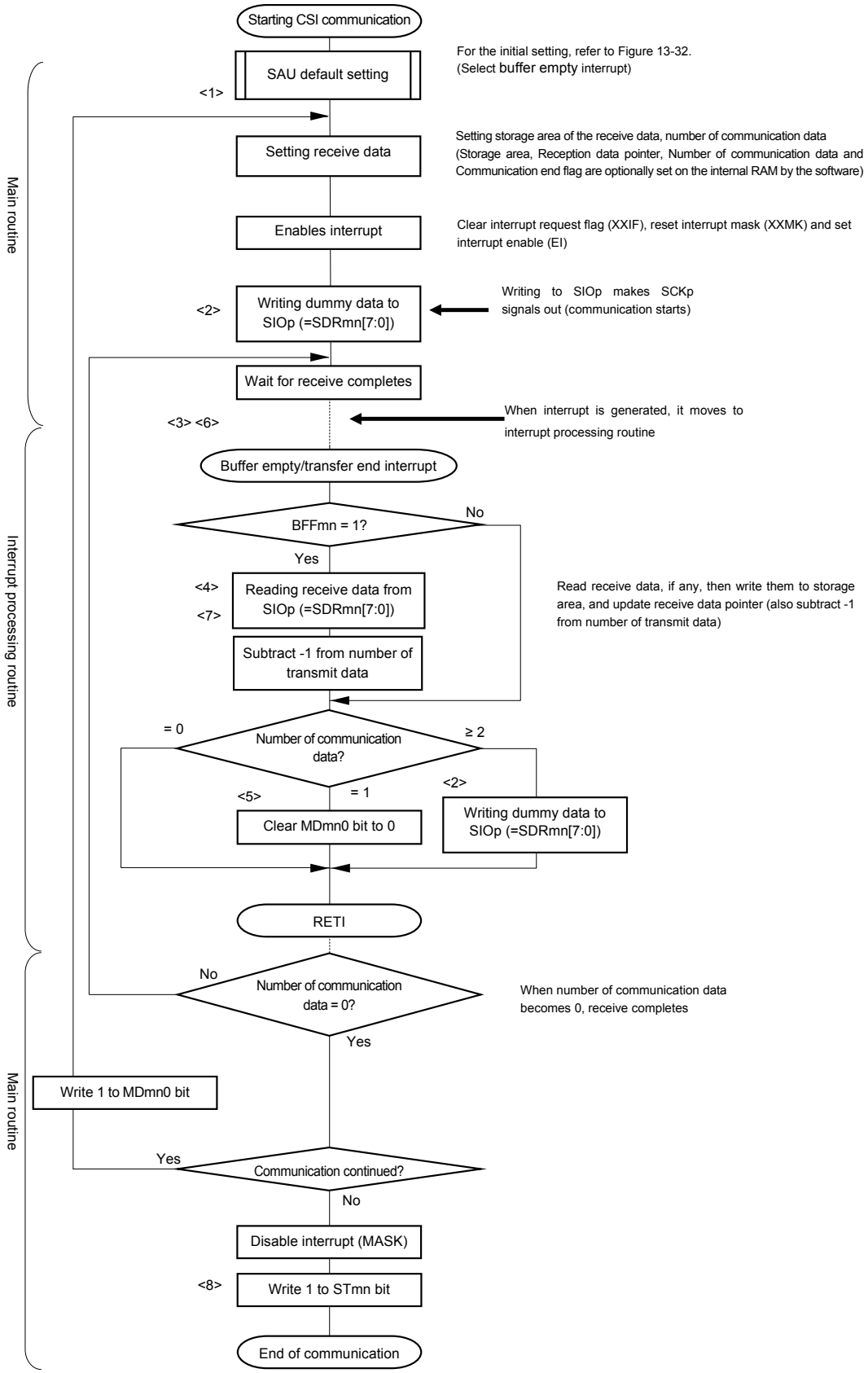

Remark <1> to <8> in the figure correspond to <1> to <8> in **Figure 13-38 Timing Chart of Master Reception (in Continuous Reception Mode)**.

13.5.3 Master transmission/reception

Master transmission/reception is that the RL78 microcontroller outputs a transfer clock and transmits/receives data to/from other device.

3-Wire Serial I/O	CSI00	CSI20	CSI21
Target channel	Channel 0 of SAU0	Channel 0 of SAU1	Channel 1 of SAU1
Pins used	SCK00, SI00, SO00	SCK20, SI20, SO20	SCK21, SI21, SO21 (internal pins)
Interrupt[Note 1]	INTCSI00	INTCSI20	INTCSI21
	Transfer end interrupt (in single-transfer mode) or buffer empty interrupt (in continuous transfer mode) can be selected.		
Error detection flag[Note 1]	Overrun error detection flag (OVFmn) only		
Transfer data length[Note 1]	7 or 8 bits		
Transfer rate[Notes 1, 2]	Max. $f_{CLK}/2$ [Hz] (CSI00 only), $f_{CLK}/4$ [Hz] Min. $f_{CLK}/(2 \times 2^{15} \times 128)$ [Hz] f_{CLK}: System clock frequency		
Data phase[Note 1]	Selectable by the DAPmn bit of the SCRmn register ● DAPmn = 0: Data I/O starts at the start of the operation of the serial clock. ● DAPmn = 1: Data I/O starts half a clock before the start of the serial clock operation.		
Clock phase[Note 1]	Selectable by the CKPmn bit of the SCRmn register ● CKPmn = 0: Non-reverse ● CKPmn = 1: Reverse		
Data direction	MSB or LSB first		

Notes 1. CSI21 is for communication between MCU and RF transceiver. For operation setting, see **2.2 Communication Interface between MCU and RF Transceiver**.

2. Use this operation within a range that satisfies the conditions above and the peripheral functions characteristics in the electrical specifications (see **CHAPTER 30 ELECTRICAL SPECIFICATIONS**).

Remark m: Unit number (m = 0, 1), n: Channel number (n = 0 for m = 0, n = 0, 1 for m = 1),
p: CSI number (p = 00, 20, 21), mn = 00, 10, 11

(1) Register setting

Figure 13-40. Example of Contents of Registers for Master Transmission/Reception of 3-Wire Serial I/O (CSI00, CSI20, CSI21) (1/2)

(a) Serial mode register mn (SMRmn)

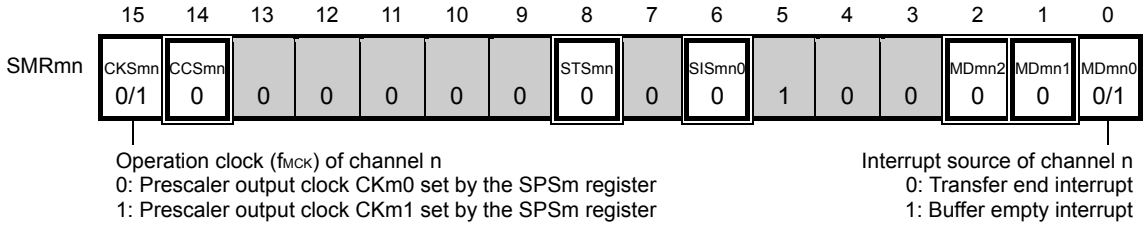

(b) Serial communication operation setting register mn (SCRmn)

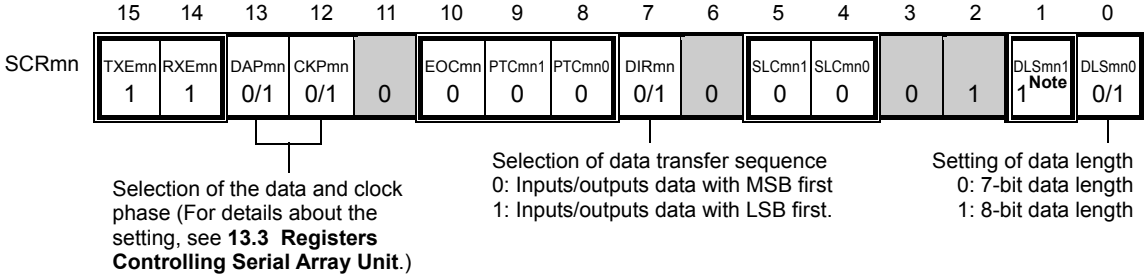

(c) Serial data register mn (SDRmn) (lower 8 bits: SIOp)

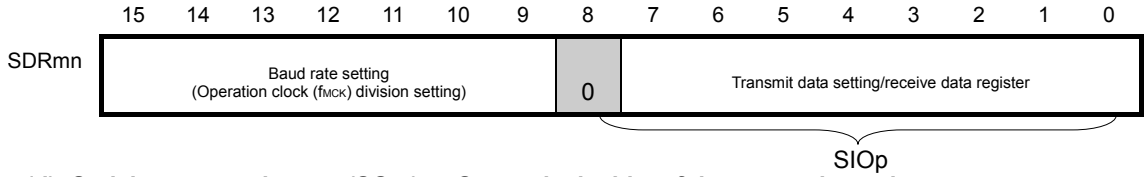

(d) Serial output register m (SOm) … Sets only the bits of the target channel.

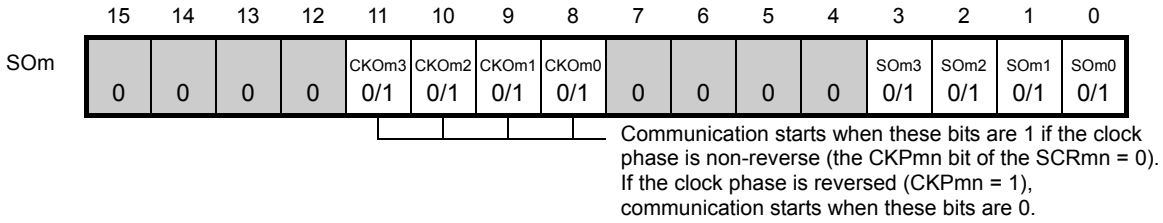

Note Only provided for the SCR00, SCR01, SCR10 and SCR11 registers. This bit is fixed to 1 for the other registers.

Remarks 1. m: Unit number (m = 0, 1), n: Channel number (n = 0 for m = 0, n = 0, 1 for m = 1),
p: CSI number (p = 00, 20, 21), mn = 00, 10, 11

2. ☐: Setting is fixed in the CSI master transmission/reception mode
▒: Setting disabled (set to the initial value)
0/1: Set to 0 or 1 depending on the usage of the user

Figure 13-40. Example of Contents of Registers for Master Transmission/Reception of 3-Wire Serial I/O (CSI00, CSI20, CSI21) (2/2)

(e) Serial output enable register m (SOEm) … Sets only the bits of the target channel to 1.

	15	14	13	12	11	10	9	8	7	6	5	4	3	2	1	0
SOEm	0	0	0	0	0	0	0	0	0	0	0	0	SOEm3 0/1	SOEm2 0/1	SOEm1 0/1	SOEm0 0/1

(f) Serial channel start register m (SSm) … Sets only the bits of the target channel to 1.

	15	14	13	12	11	10	9	8	7	6	5	4	3	2	1	0
SSm	0	0	0	0	0	0	0	0	0	0	0	0	SSm3 0/1	SSm2 0/1	SSm1 0/1	SSm0 0/1

Remarks 1. m: Unit number (m = 0, 1), n: Channel number (n = 0 for m = 0, n = 0, 1 for m = 1),
p: CSI number (p = 00, 20, 21), mn = 00, 10, 11

2. ▒ : Setting disabled (set to the initial value)
0/1: Set to 0 or 1 depending on the usage of the user

(2) Operation procedure

Figure 13-41. Initial Setting Procedure for Master Transmission/Reception

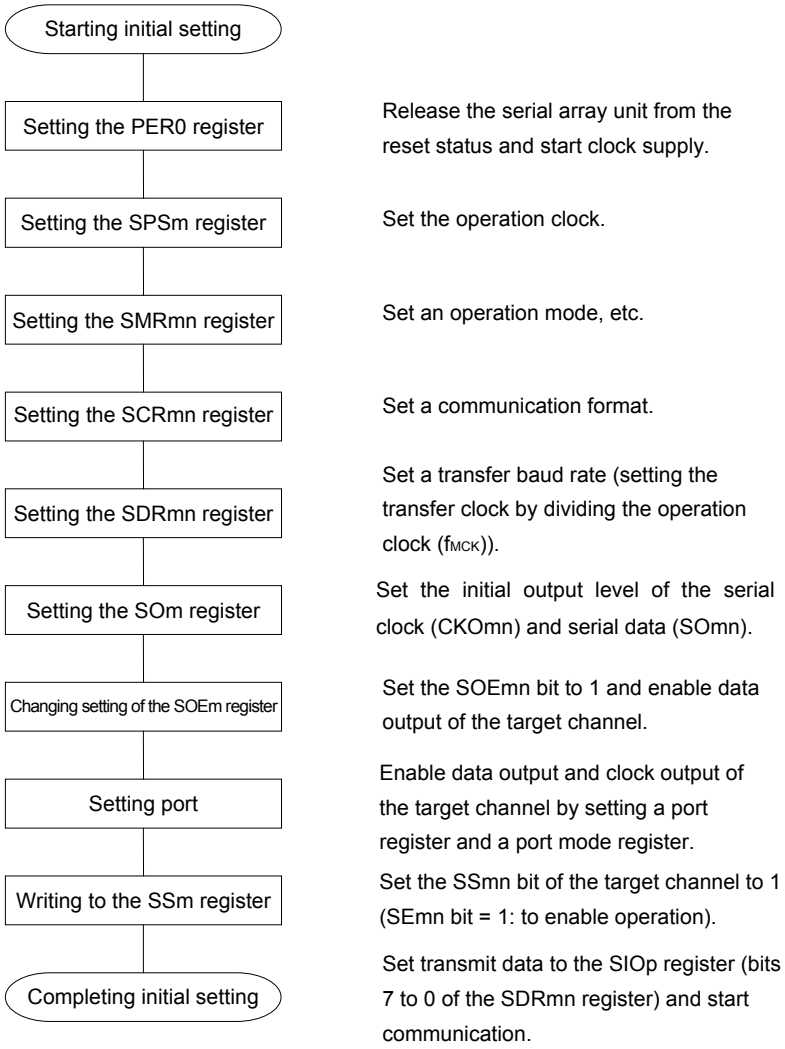

Figure 13-42. Procedure for Stopping Master Transmission/Reception

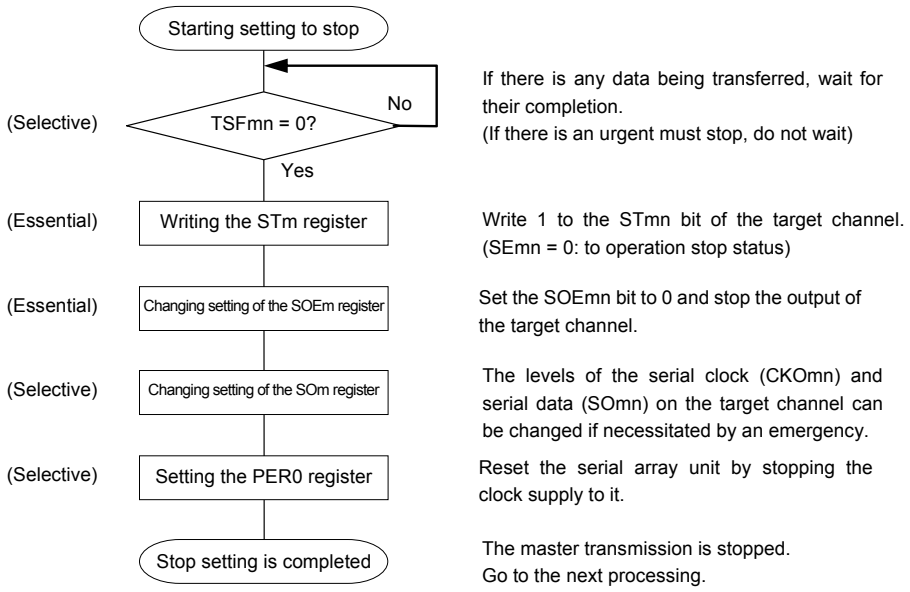

Figure 13-43. Procedure for Resuming Master Transmission/Reception

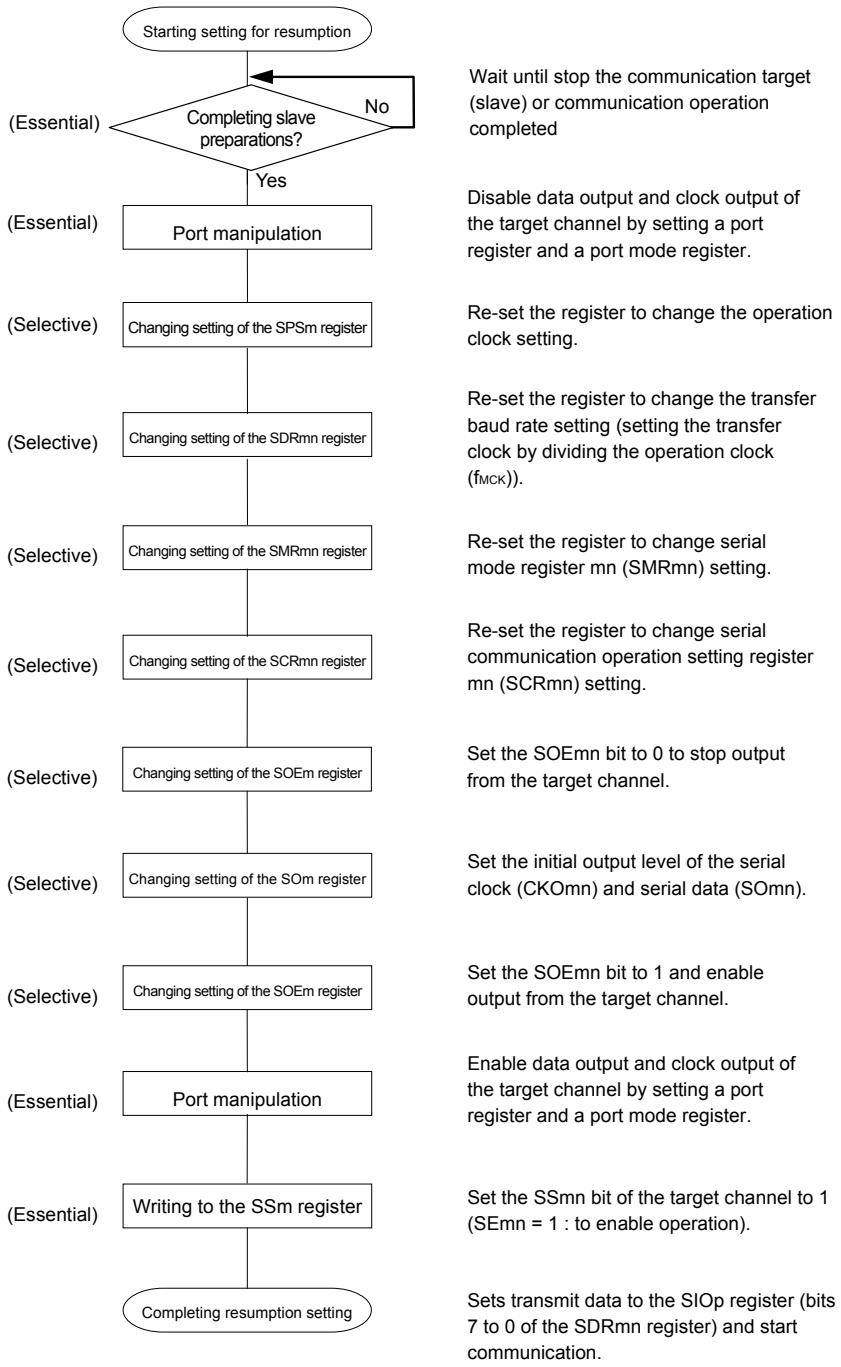

(3) Processing flow (in single-transmission/reception mode)

Figure 13-44. Timing Chart of Master Transmission/Reception (in Single-Transmission/Reception Mode) (Type 1: DAPmn = 0, CKPmn = 0)

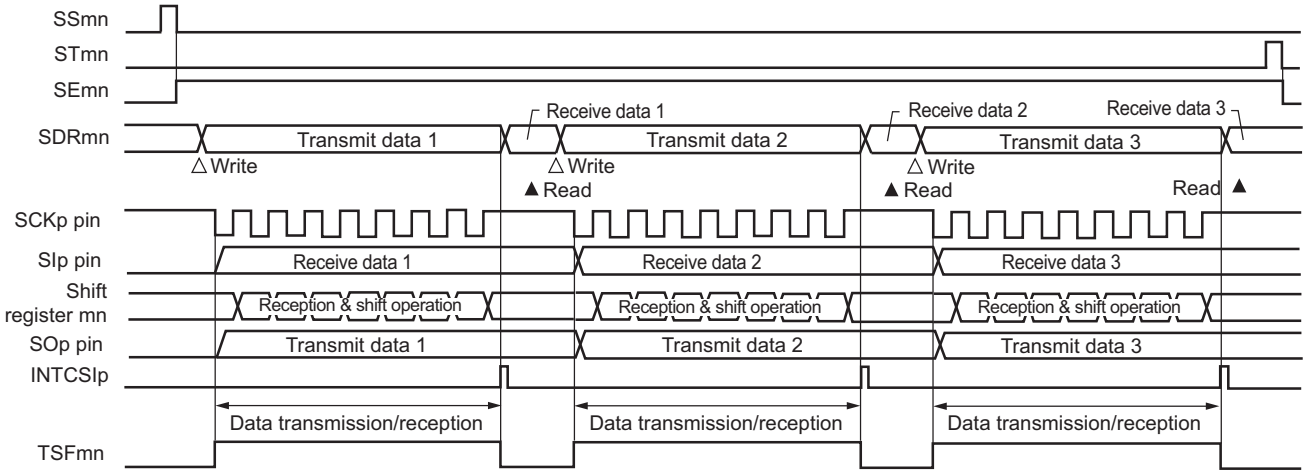

Remark m: Unit number (m = 0, 1), n: Channel number (n = 0 for m = 0, n = 0, 1 for m = 1),
p: CSI number (p = 00, 20, 21), mn = 00, 10, 11

Figure 13-45. Flowchart of Master Transmission/Reception (in Single- Transmission/Reception Mode)

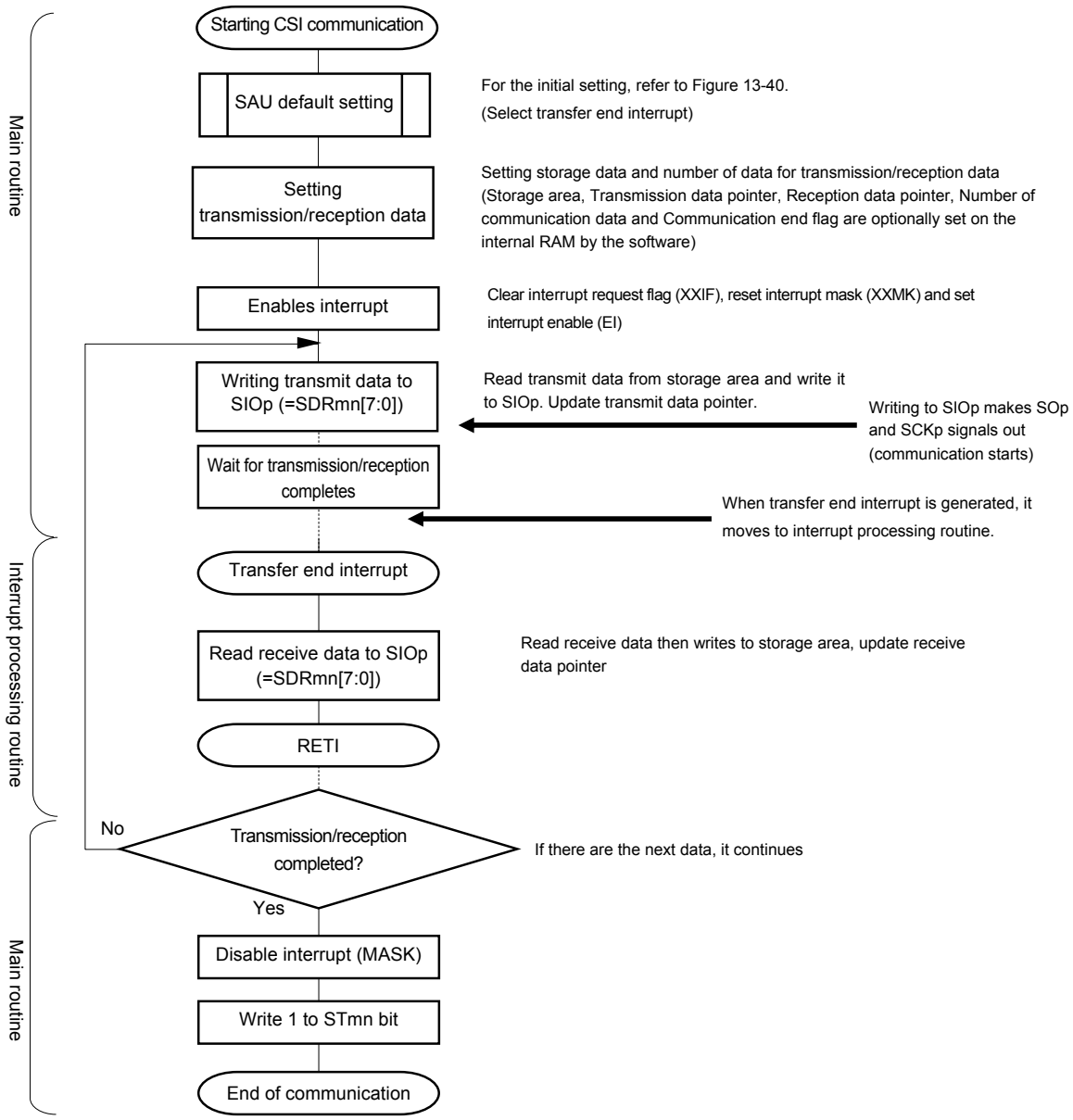

(4) Processing flow (in continuous transmission/reception mode)

Figure 13-46. Timing Chart of Master Transmission/Reception (in Continuous Transmission/Reception Mode) (Type 1: DAPmn = 0, CKPmn = 0)

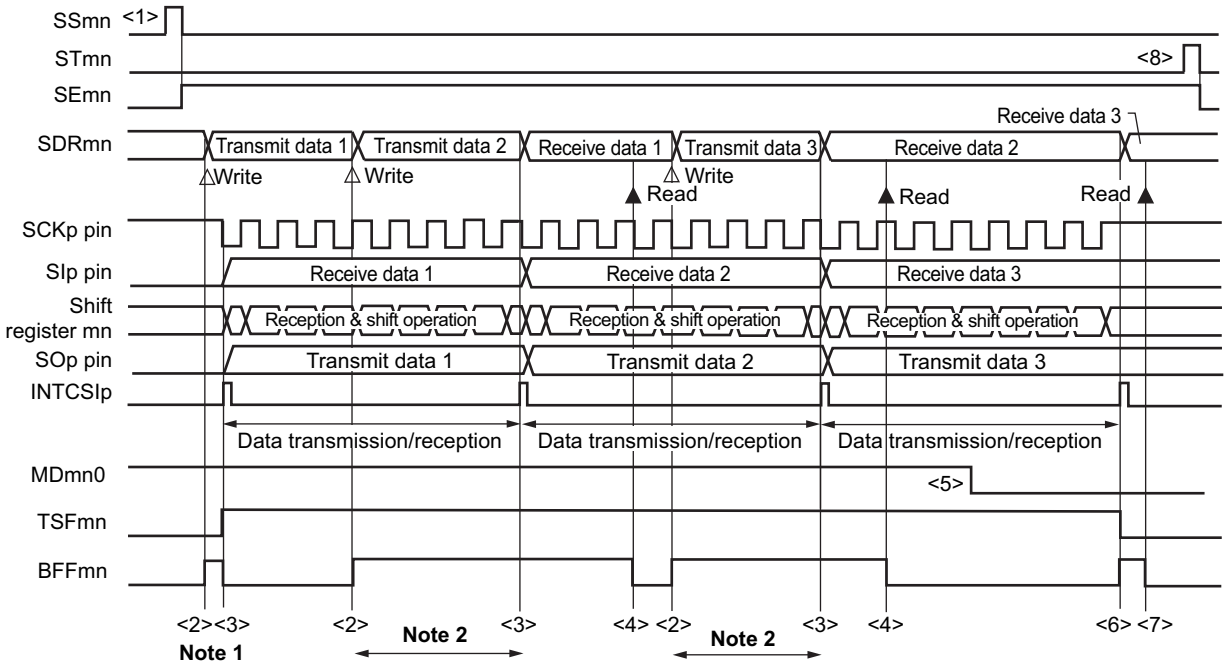

Notes 1. If transmit data is written to the SDRmn register while the BFFmn bit of serial status register mn (SSRmn) is 1 (valid data is stored in serial data register mn (SDRmn)), the transmit data is overwritten.

2. The transmit data can be read by reading the SDRmn register during this period. At this time, the transfer operation is not affected.

Caution The MDmn0 bit of serial mode register mn (SMRmn) can be rewritten even during operation. However, rewrite it before transfer of the last bit is started, so that it has been rewritten before the transfer end interrupt of the last transmit data.

Remarks 1. <1> to <8> in the figure correspond to <1> to <8> in **Figure 13-47 Flowchart of Master Transmission/Reception (in Continuous Transmission/Reception Mode**).

2. m: Unit number (m = 0, 1), n: Channel number (n = 0 for m = 0, n = 0, 1 for m = 1), p: CSI number (p = 00, 20, 21), mn = 00, 10, 11

Figure 13-47. Flowchart of Master Transmission/Reception (in Continuous Transmission/Reception Mode)

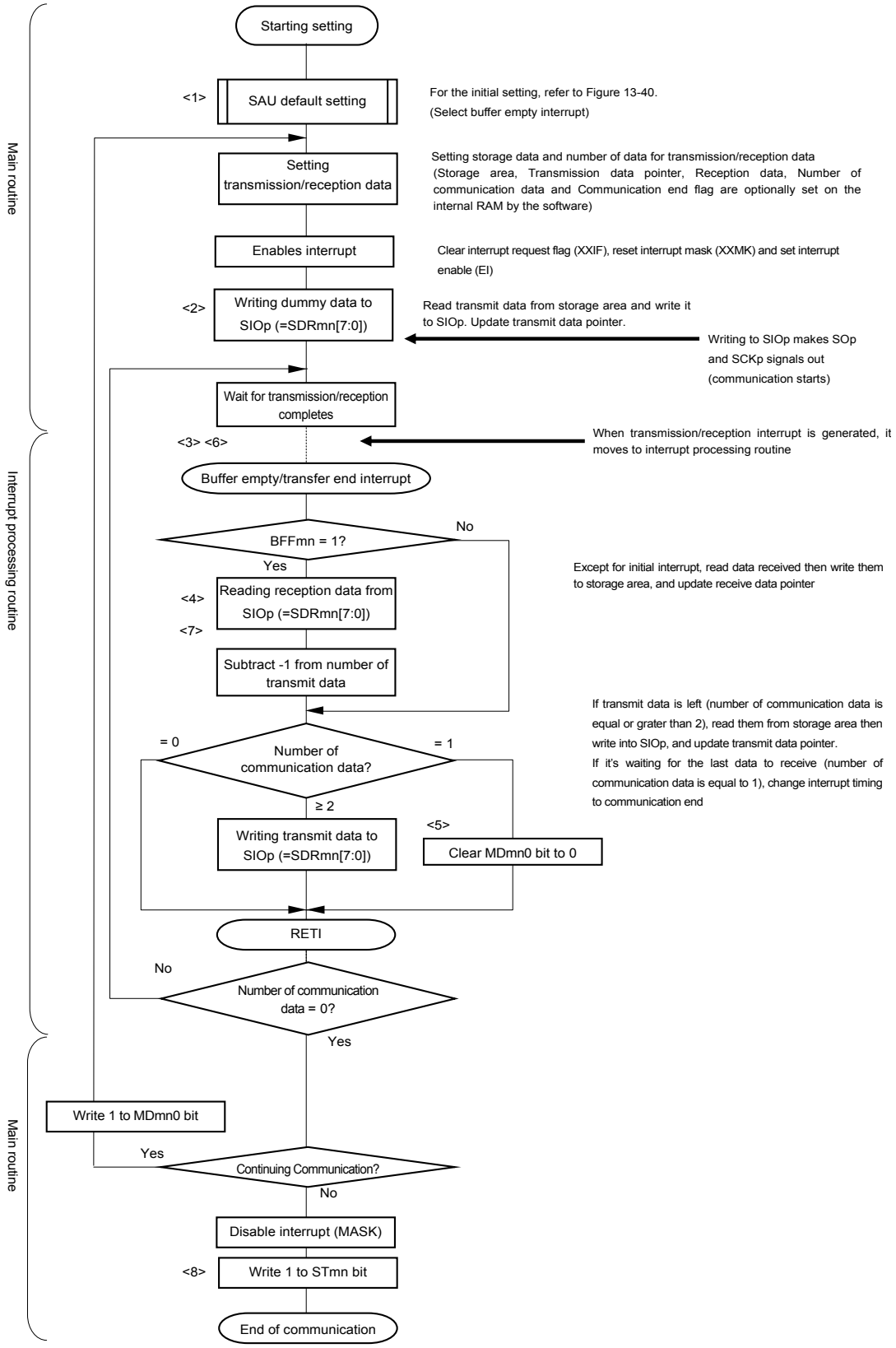

Remark <1> to <8> in the figure correspond to <1> to <8> in **Figure 13-46 Timing Chart of Master Transmission/Reception (in Continuous Transmission/Reception Mode)**.

13.5.4 Slave transmission

Slave transmission is that the RL78 microcontroller transmits data to another device in the state of a transfer clock being input from another device.

3-Wire Serial I/O	CSI00	CSI20	CSI21
Target channel	Channel 0 of SAU0	Channel 0 of SAU1	Channel 1 of SAU1
Pins used	SCK00, SO00	SCK20, SO20	–
Interrupt[Note 3]	INTCSI00	INTCSI20	–
	Transfer end interrupt (in single-transfer mode) or buffer empty interrupt (in continuous transfer mode) can be selected.		
Error detection flag[Note 3]	Overrun error detection flag (OVFmn) only		
Transfer data length[Note 3]	7 or 8 bits		
Transfer rate[Note 3]	Max. f_{MCK}/6 [Hz][Notes 1, 2].		
Data phase[Note 3]	Selectable by the DAPmn bit of the SCRmn register ● DAPmn = 0: Data output starts from the start of the operation of the serial clock. ● DAPmn = 1: Data output starts half a clock before the start of the serial clock operation.		
Clock phase[Note 3]	Selectable by the CKPmn bit of the SCRmn register ● CKPmn = 0: Non-reverse ● CKPmn = 1: Reverse		
Data direction[Note 3]	MSB or LSB first		

Notes 1. Because the external serial clock input to the SCK00 and SCK20 pins is sampled internally and used, the fastest transfer rate is f_{MCK}/6 [Hz].

2. Use this operation within a range that satisfies the conditions above and the peripheral functions characteristics in the electrical specifications (see **CHAPTER 30 ELECTRICAL SPECIFICATIONS**).

3. CSI21 cannot be used for slave transmission.

Remarks 1. f_{MCK}: Operation clock frequency of target channel
f_{SCK}: Serial clock frequency

2. m: Unit number (m = 0, 1), n: Channel number (n = 0), mn = 00, 10

(1) Register setting

Figure 13-48. Example of Contents of Registers for Slave Transmission of 3-Wire Serial I/O (CSI00, CSI20) (1/2)

(a) Serial mode register mn (SMRmn)

	15	14	13	12	11	10	9	8	7	6	5	4	3	2	1	0
SMRmn	CKSmn	CCSmn						STSmn		SISmn0				MDmn2	MDmn1	MDmn0
	0/1	1	0	0	0	0	0	0	0	0	1	0	0	0	0	0/1

Operation clock (f_{MCK}) of channel n
0: Prescaler output clock CKm0 set by the SPSm register
1: Prescaler output clock CKm1 set by the SPSm register

Interrupt source of channel n
0: Transfer end interrupt
1: Buffer empty interrupt

(b) Serial communication operation setting register mn (SCRmn)

	15	14	13	12	11	10	9	8	7	6	5	4	3	2	1	0
SCRmn	TXEmn	RXEmn	DAPmn	CKPmn		EOCmn	PTCmn1	PTCmn0	DIRmn		SLCmn1	SLCmn0			DLSmn1	DLSmn0
	1	0	0/1	0/1	0	0	0	0	0/1	0	0	0	0	1	1 Note	0/1

Selection of the data and clock phase (For details about the setting, see **13.3 Registers Controlling Serial Array Unit**.)

Selection of data transfer sequence
0: Inputs/outputs data with MSB first
1: Inputs/outputs data with LSB first.

Setting of data length
0: 7-bit data length
1: 8-bit data length

(c) Serial data register mn (SDRmn) (lower 8 bits: SIOp)

	15	14	13	12	11	10	9	8	7	6	5	4	3	2	1	0
SDRmn	0000000 Baud rate setting							0	Transmit data setting							

SIOp

(d) Serial output register m (SOm) … Sets only the bits of the target channel.

	15	14	13	12	11	10	9	8	7	6	5	4	3	2	1	0
SOm					CKOm3	CKOm2	CKOm1	CKOm0					SOm3	SOm2	SOm1	SOm0
	0	0	0	0	×	×	×	×	0	0	0	0	0/1	0/1	0/1	0/1

Note Only provided for the SCR00, SCR01, SCR10 and SCR11 registers. This bit is fixed to 1 for the other registers.

Remarks 1. m: Unit number (m = 0, 1), n: Channel number (n = 0), p: CSI number (p = 00, 20), mn = 00, 10

2. □: Setting is fixed in the CSI slave transmission mode, ■ : Setting disabled (set to the initial value)
×: Bit that cannot be used in this mode (set to the initial value when not used in any mode)
0/1: Set to 0 or 1 depending on the usage of the user

Figure 13-48. Example of Contents of Registers for Slave Transmission of 3-Wire Serial I/O (CSI00, CSI20) (2/2)

(e) Serial output enable register m (SOEm) … Sets only the bits of the target channel to 1.

	15	14	13	12	11	10	9	8	7	6	5	4	3	2	1	0
SOEm	0	0	0	0	0	0	0	0	0	0	0	0	SOEm3 0/1	SOEm2 0/1	SOEm1 0/1	SOEm0 0/1

(f) Serial channel start register m (SSm) … Sets only the bits of the target channel to 1.

	15	14	13	12	11	10	9	8	7	6	5	4	3	2	1	0
SSm	0	0	0	0	0	0	0	0	0	0	0	0	SSm3 0/1	SSm2 0/1	SSm1 0/1	SSm0 0/1

Remarks 1. m: Unit number (m = 0, 1), n: Channel number (n = 0), p: CSI number (p = 00, 20), mn = 00, 10

2. ▒: Setting disabled (set to the initial value)

×: Bit that cannot be used in this mode (set to the initial value when not used in any mode)

0/1: Set to 0 or 1 depending on the usage of the user

(2) Operation procedure

Figure 13-49. Initial Setting Procedure for Slave Transmission

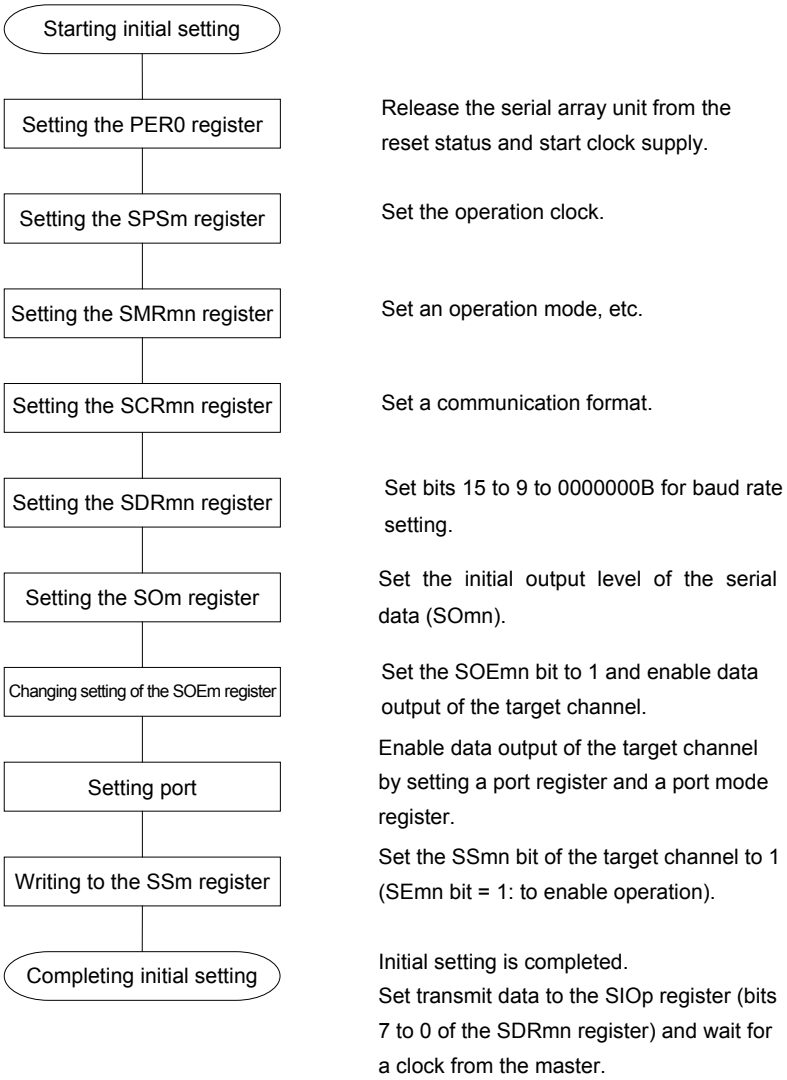

Figure 13-50. Procedure for Stopping Slave Transmission

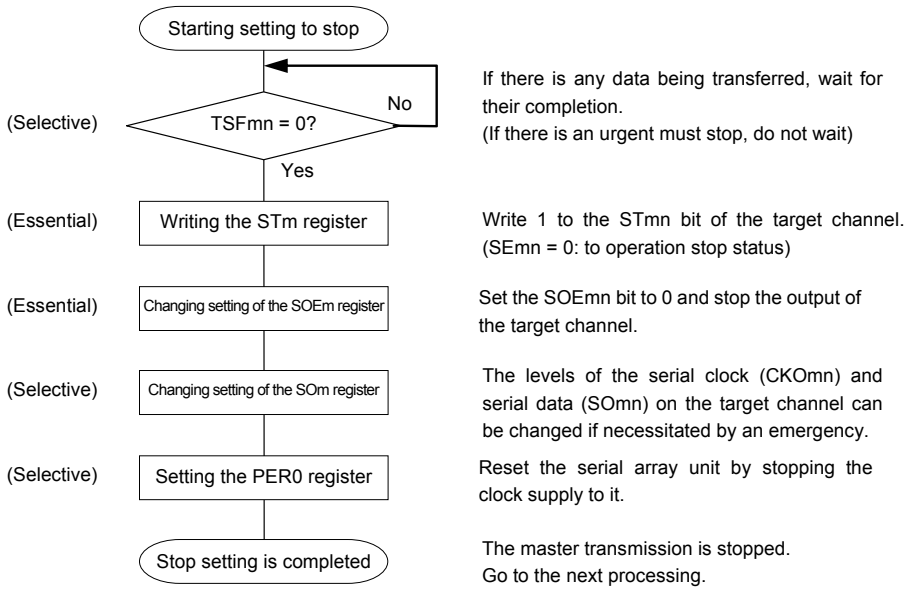

Figure 13-51. Procedure for Resuming Slave Transmission

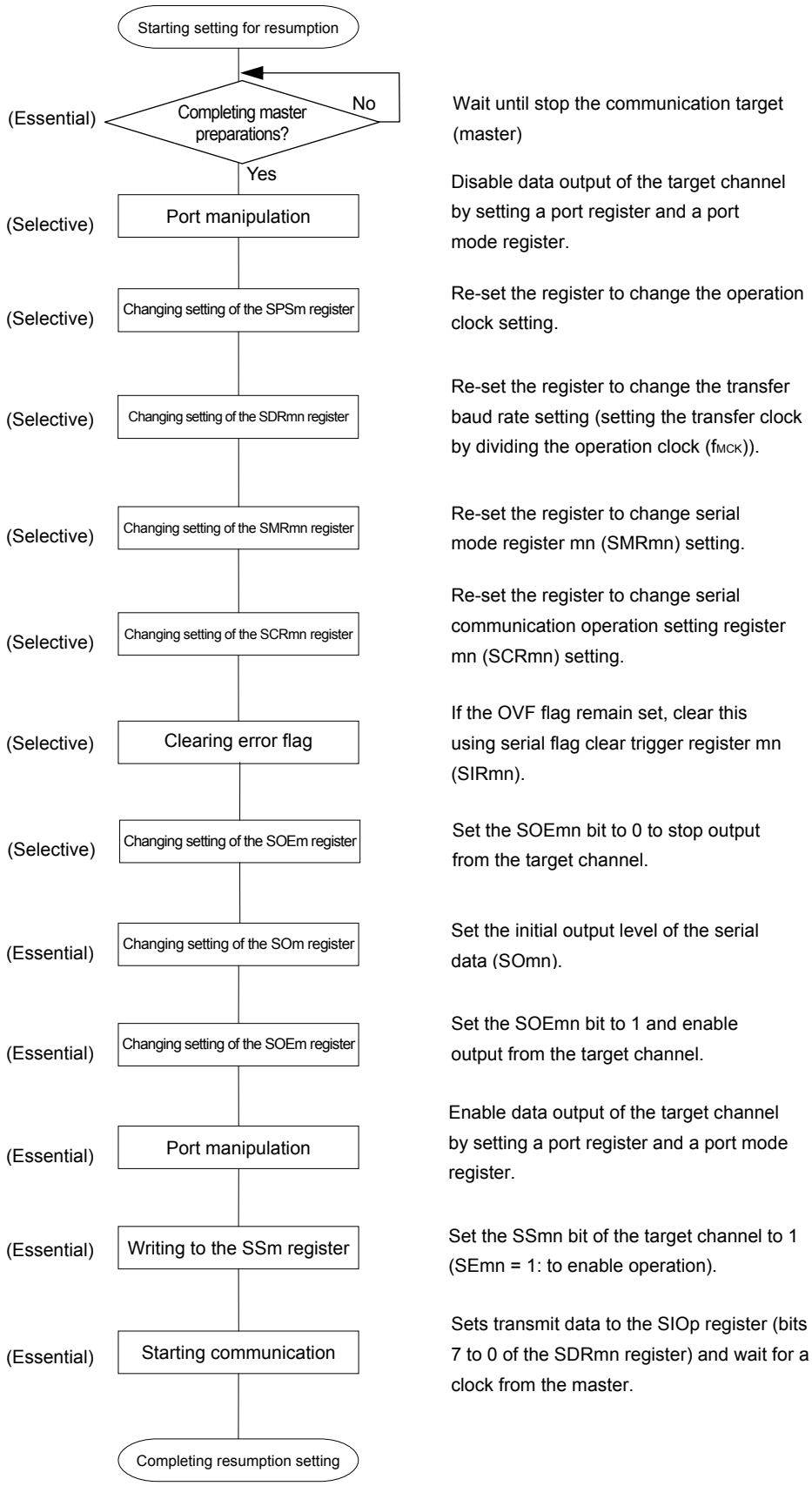

(**Remark** is listed on the next page.)

Remark If PER0 is rewritten while stopping the master transmission and the clock supply is stopped, wait until the transmission target (master) stops or transmission finishes, and then perform initialization instead of restarting the transmission.

(3) Processing flow (in single-transmission mode)

Figure 13-52. Timing Chart of Slave Transmission (in Single-Transmission Mode)
(Type 1: DAPmn = 0, CKPmn = 0)

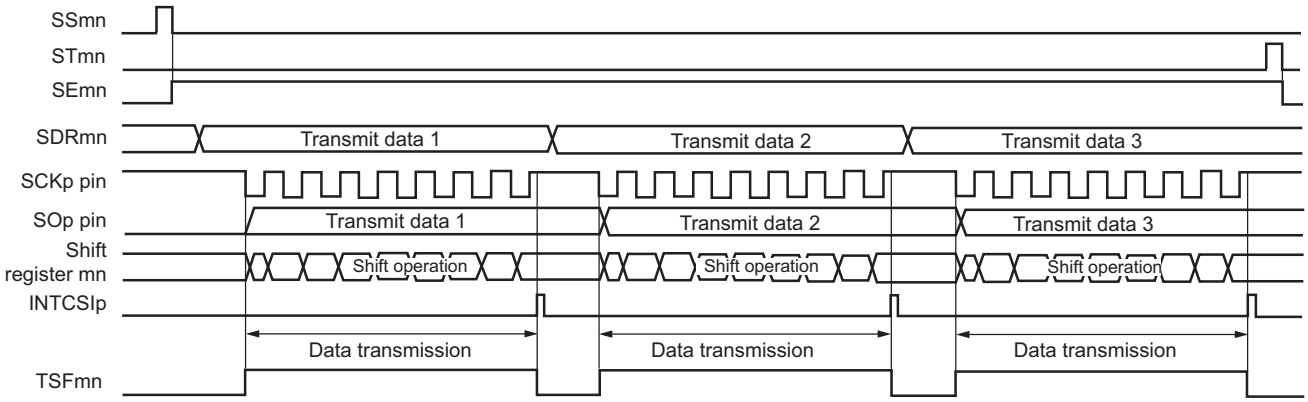

Remark m: Unit number (m = 0, 1), n: Channel number (n = 0), p: CSI number (p = 00, 20), mn = 00, 10

Figure 13-53. Flowchart of Slave Transmission (in Single-Transmission Mode)

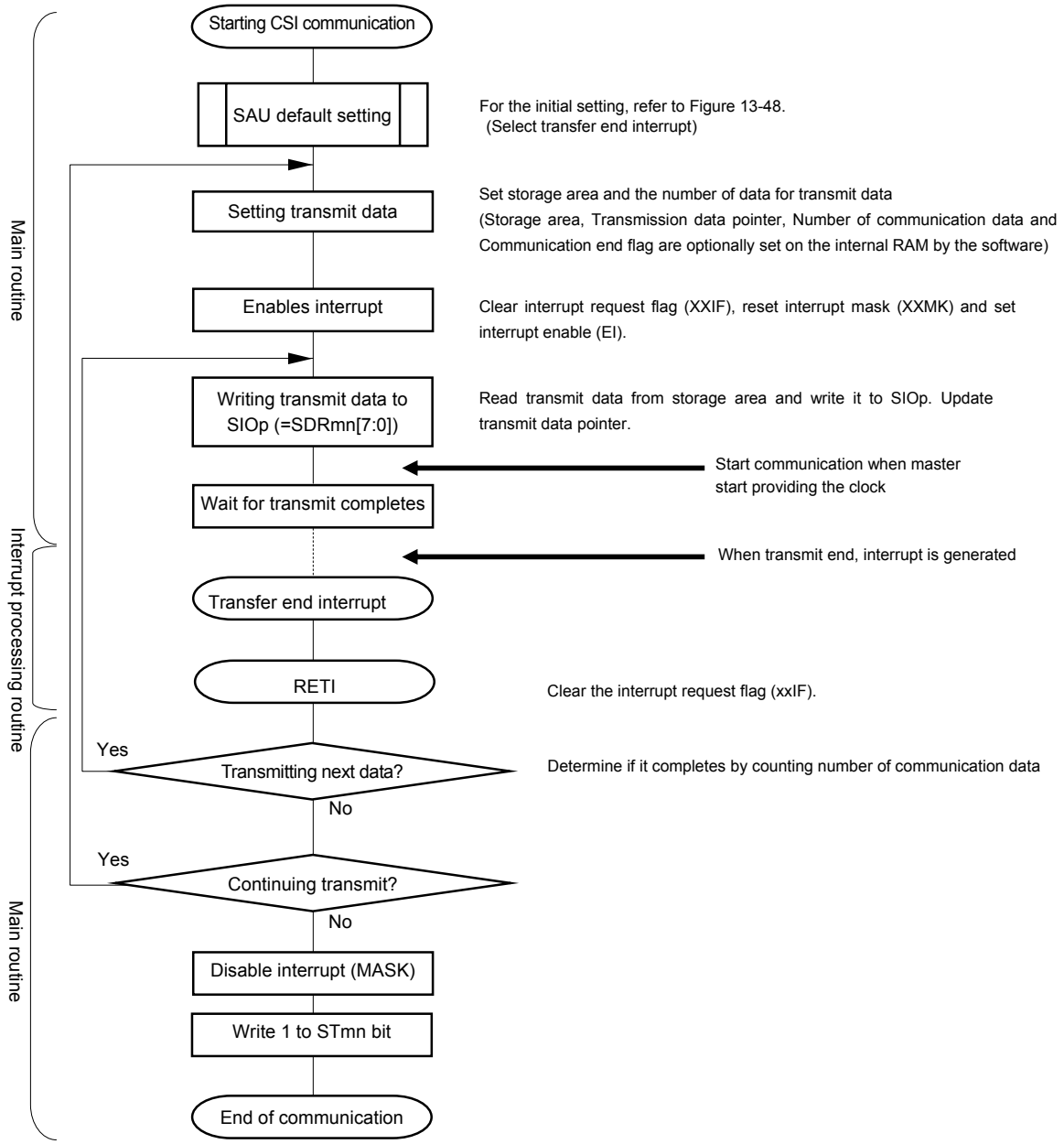

(4) Processing flow (in continuous transmission mode)

Figure 13-54. Timing Chart of Slave Transmission (in Continuous Transmission Mode)
(Type 1: DAPmn = 0, CKPmn = 0)

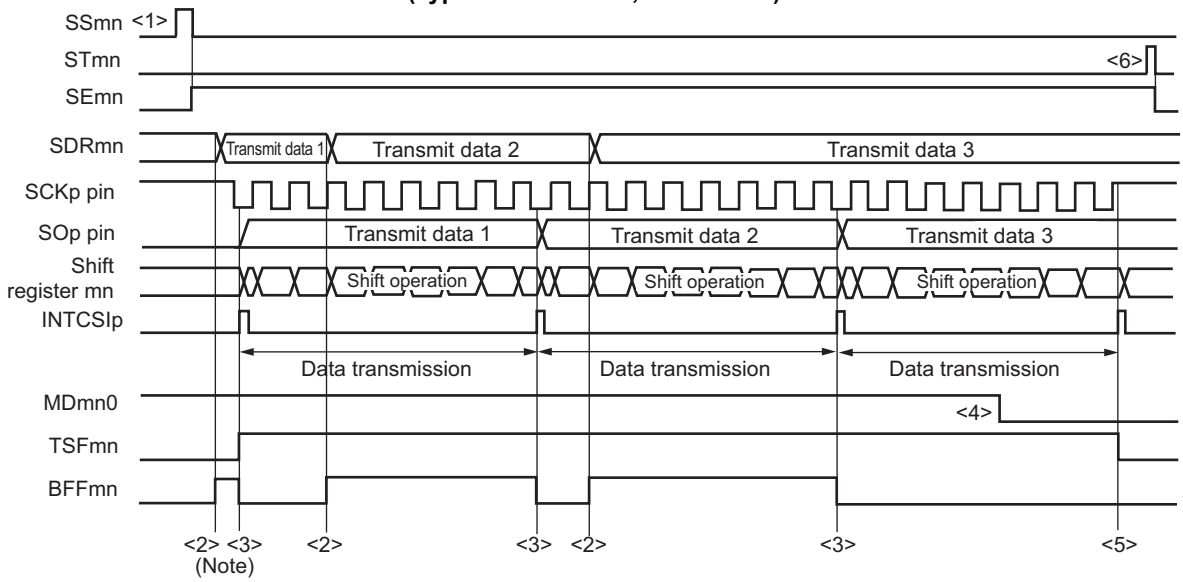

Note If transmit data is written to the SDRmn register while the BFFmn bit of serial status register mn (SSRmn) is 1 (valid data is stored in serial data register mn (SDRmn)), the transmit data is overwritten.

Caution **The MDmn0 bit of serial mode register mn (SMRmn) can be rewritten even during operation. However, rewrite it before transfer of the last bit is started.**

Remark m: Unit number (m = 0, 1), n: Channel number (n = 0), p: CSI number (p = 00, 20), mn = 00, 10

Figure 13-55. Flowchart of Slave Transmission (in Continuous Transmission Mode)

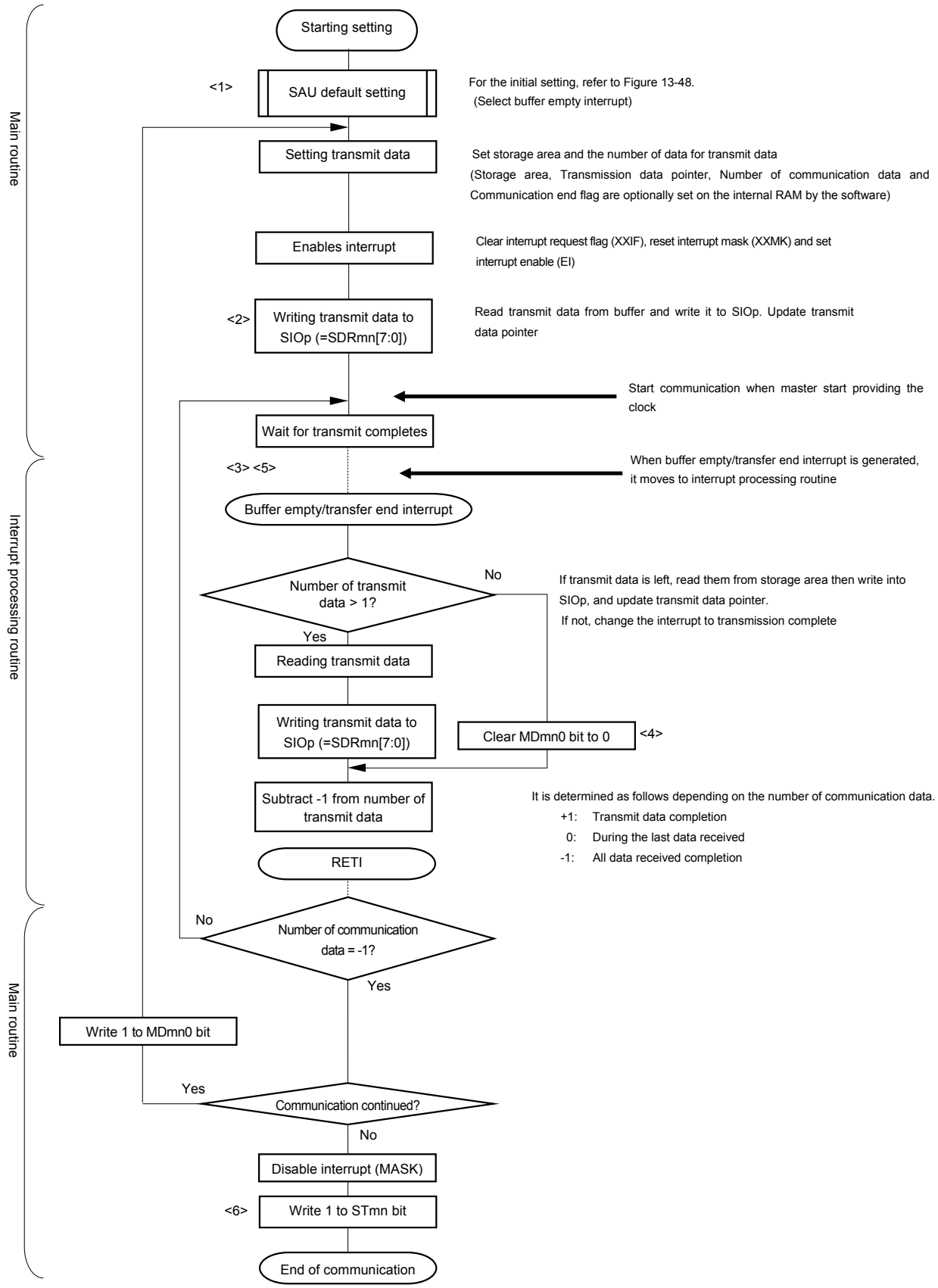

Remark <1> to <6> in the figure correspond to <1> to <6> in **Figure 13-54 Timing Chart of Slave Transmission (in Continuous Transmission Mode)**.

13.5.5 Slave reception

Slave reception is that the RL78 microcontroller receives data from another device in the state of a transfer clock being input from another device.

3-Wire Serial I/O	CSI00	CSI20	CSI21
Target channel	Channel 0 of SAU0	Channel 0 of SAU1	Channel 1 of SAU1
Pins used	SCK00, SI00	SCK20, SI20	–
Interrupt[Note 3]	INTCSI00	INTCSI20	–
	Transfer end interrupt only (Setting the buffer empty interrupt is prohibited.)		
Error detection flag[Note 3]	Overrun error detection flag (OVFmn) only		
Transfer data length[Note 3]	7 or 8 bits		
Transfer rate[Note 3]	Max. $f_{MCK}/6$ [Hz][Notes 1, 2]		
Data phase[Note 3]	Selectable by the DAPmn bit of the SCRmn register ● DAPmn = 0: Data input starts from the start of the operation of the serial clock. ● DAPmn = 1: Data input starts half a clock before the start of the serial clock operation.		
Clock phase[Note 3]	Selectable by the CKPmn bit of the SCRmn register ● CKPmn = 0: Non-reverse ● CKPmn = 1: Reverse		
Data direction[Note 3]	MSB or LSB first		

Notes 1. Because the external serial clock input to the SCK00 and SCK20 pins is sampled internally and used, the fastest transfer rate is $f_{MCK}/6$ [Hz].

2. Use this operation within a range that satisfies the conditions above and the peripheral functions characteristics in the electrical specifications (see **CHAPTER 30 ELECTRICAL SPECIFICATIONS**).

3. CSI21 cannot be used for slave reception.

Remarks 1. f_{MCK}: Operation clock frequency of target channel
f_{SCK}: Serial clock frequency

2. m: Unit number (m = 0, 1), n: Channel number (n = 0), mn = 00, 10

(1) Register setting

Figure 13-56. Example of Contents of Registers for Slave Reception of 3-Wire Serial I/O (CSI00, CSI20) (1/2)

(a) Serial mode register mn (SMRmn)

	15	14	13	12	11	10	9	8	7	6	5	4	3	2	1	0
SMRmn	CKSmn	CCSmn						STSmn		SISmn0				MDmn2	MDmn1	MDmn0
	0/1	1	0	0	0	0	0	0	0	0	1	0	0	0	0	0

Operation clock (f_{MCK}) of channel n
0: Prescaler output clock CKm0 set by the SPSm register
1: Prescaler output clock CKm1 set by the SPSm register

Interrupt source of channel n
0: Transfer end interrupt

(b) Serial communication operation setting register mn (SCRmn)

	15	14	13	12	11	10	9	8	7	6	5	4	3	2	1	0
SCRmn	TXEmn	RXEmn	DAPmn	CKPmn		EOCmn	PTCmn1	PTCmn0	DIRmn		SLCmn1	SLCmn0			DLSmn1	DLSmn0
	0	1	0/1	0/1	0	0	0	0	0/1	0	0	0	0	1	1 Note	0/1

Selection of the data and clock phase (For details about the setting, see **13.3 Registers Controlling Serial Array Unit**.)

Selection of data transfer sequence
0: Inputs/outputs data with MSB first
1: Inputs/outputs data with LSB first.

Setting of data length
0: 7-bit data length
1: 8-bit data length

(c) Serial data register mn (SDRmn) (lower 8 bits: SIOp)

	15	14	13	12	11	10	9	8	7	6	5	4	3	2	1	0
SDRmn	0000000 Baud rate setting							0	Receive data							

SIOp

(d) Serial output register m (SOm) …The Register that not used in this mode.

	15	14	13	12	11	10	9	8	7	6	5	4	3	2	1	0
SOm						CKOm2	CKOm1	CKOm0						SOm2	SOm1	SOm0
	0	0	0	0	0	×	×	×	0	0	0	0	0	×	×	×

Note Only provided for the SCR00, SCR01, SCR10 and SCR11 registers. This bit is fixed to 1 for the other registers.

Remarks 1. m: Unit number (m = 0, 1), n: Channel number (n = 0), p: CSI number (p = 00, 20), mn = 00, 10

2. ☐: Setting is fixed in the CSI slave transmission mode, ▒ : Setting disabled (set to the initial value)
×: Bit that cannot be used in this mode (set to the initial value when not used in any mode)
0/1: Set to 0 or 1 depending on the usage of the user

Figure 13-56. Example of Contents of Registers for Slave Reception of 3-Wire Serial I/O (CSI00, CSI20) (2/2)

(e) Serial output enable register m (SOEm) …The Register that not used in this mode.

	15	14	13	12	11	10	9	8	7	6	5	4	3	2	1	0
SOEm	0	0	0	0	0	0	0	0	0	0	0	0	0	SOEm2 ×	SOEm1 ×	SOEm0 ×

(f) Serial channel start register m (SSm) … Sets only the bits of the target channel to 1.

	15	14	13	12	11	10	9	8	7	6	5	4	3	2	1	0
SSm	0	0	0	0	0	0	0	0	0	0	0	0	SSm3 0/1	SSm2 0/1	SSm1 0/1	SSm0 0/1

Remarks 1. m: Unit number (m = 0, 1), n: Channel number (n = 0), p: CSI number (p = 00, 20), mn = 00, 10

2. ▒ : Setting disabled (set to the initial value)

×: Bit that cannot be used in this mode (set to the initial value when not used in any mode)

0/1: Set to 0 or 1 depending on the usage of the user

(2) Operation procedure

Figure 13-57. Initial Setting Procedure for Slave Reception

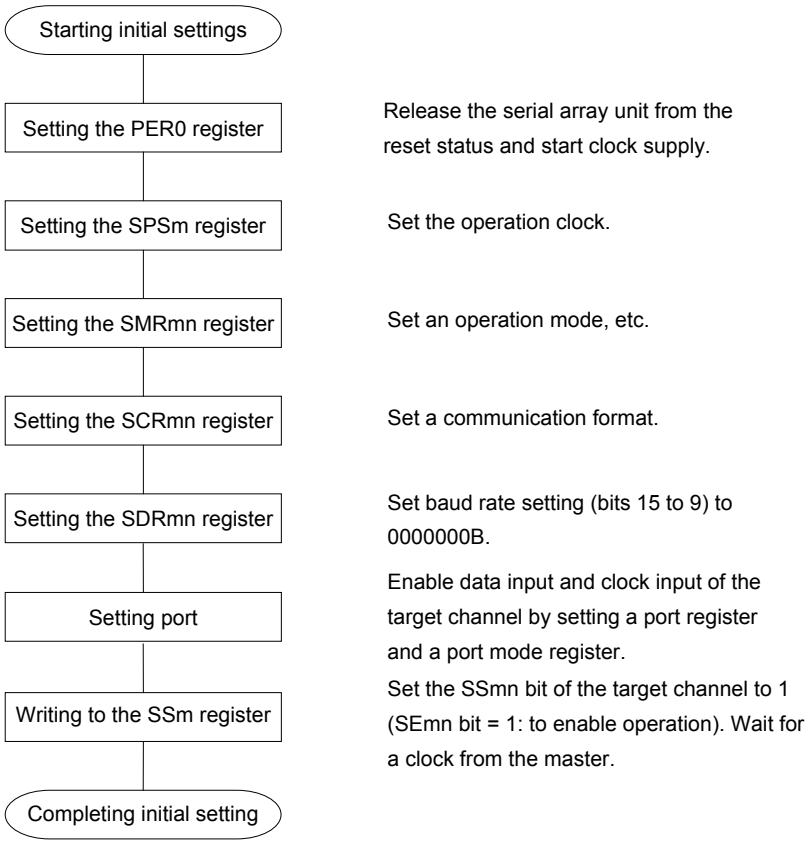

Figure 13-58. Procedure for Stopping Slave Reception

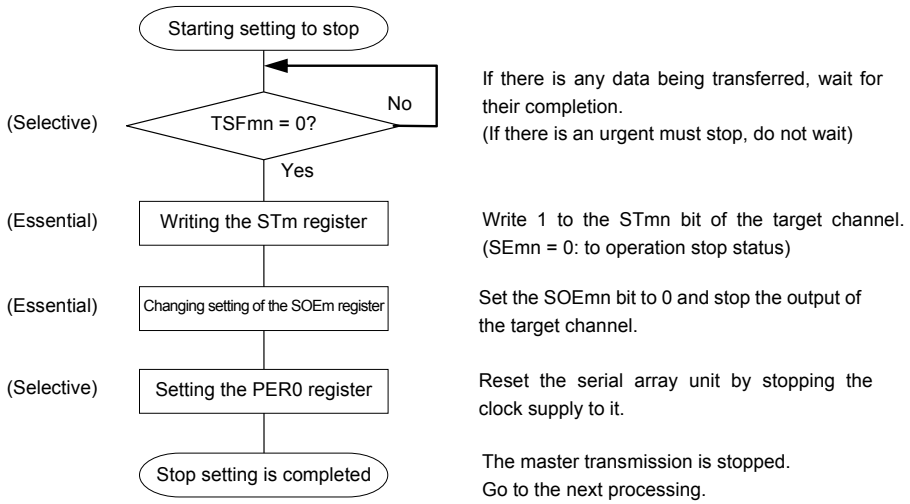

Figure 13-59. Procedure for Resuming Slave Reception

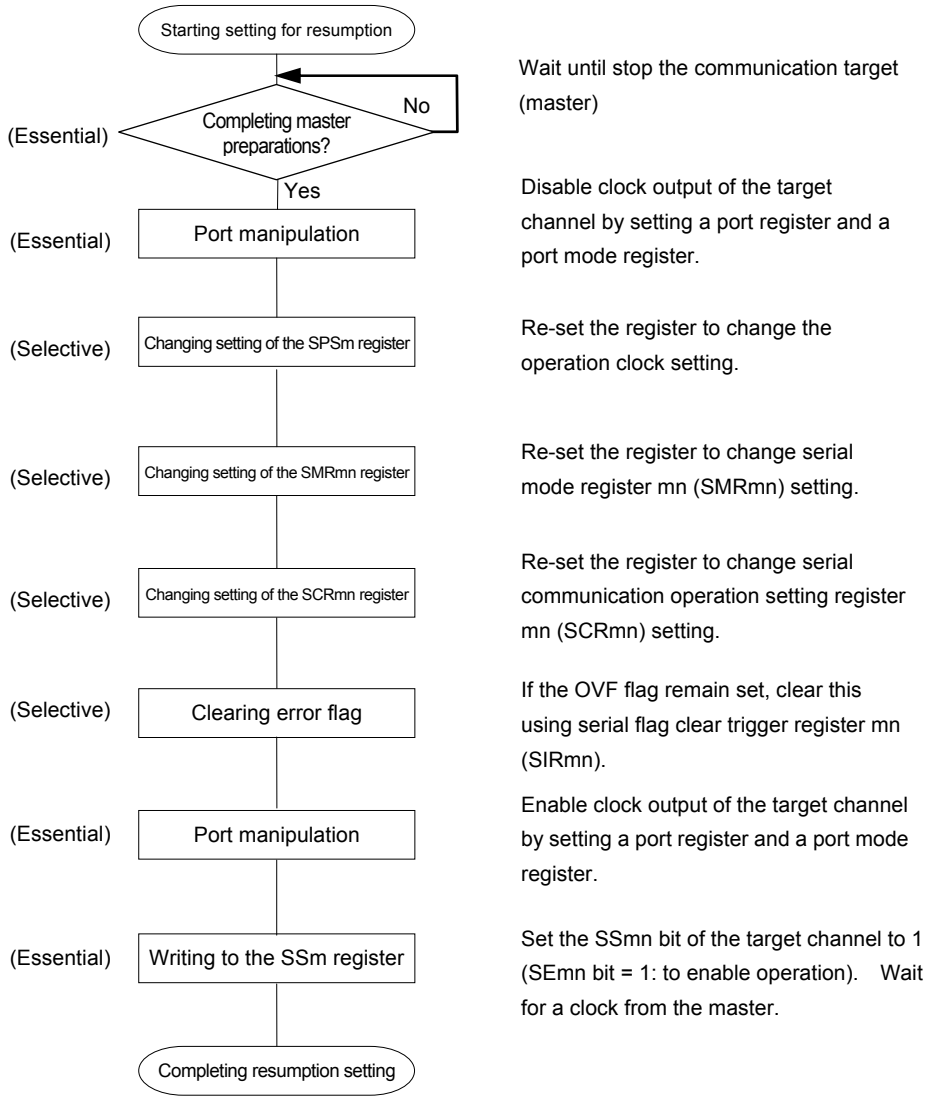

Remark If PER0 is rewritten while stopping the master transmission and the clock supply is stopped, wait until the transmission target (master) stops or transmission finishes, and then perform initialization instead of restarting the transmission.

(3) Processing flow (in single-reception mode)

Figure 13-60. Timing Chart of Slave Reception (in Single-Reception Mode)
(Type 1: DAPmn = 0, CKPmn = 0)

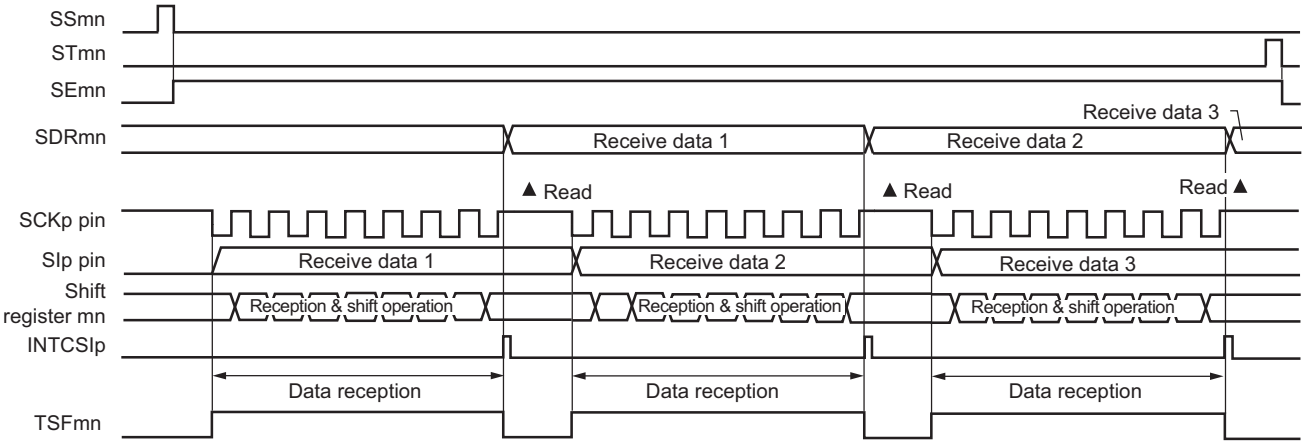

Remark m: Unit number (m = 0, 1), n: Channel number (n = 0), p: CSI number (p = 00, 20), mn = 00, 10

Figure 13-61. Flowchart of Slave Reception (in Single-Reception Mode)

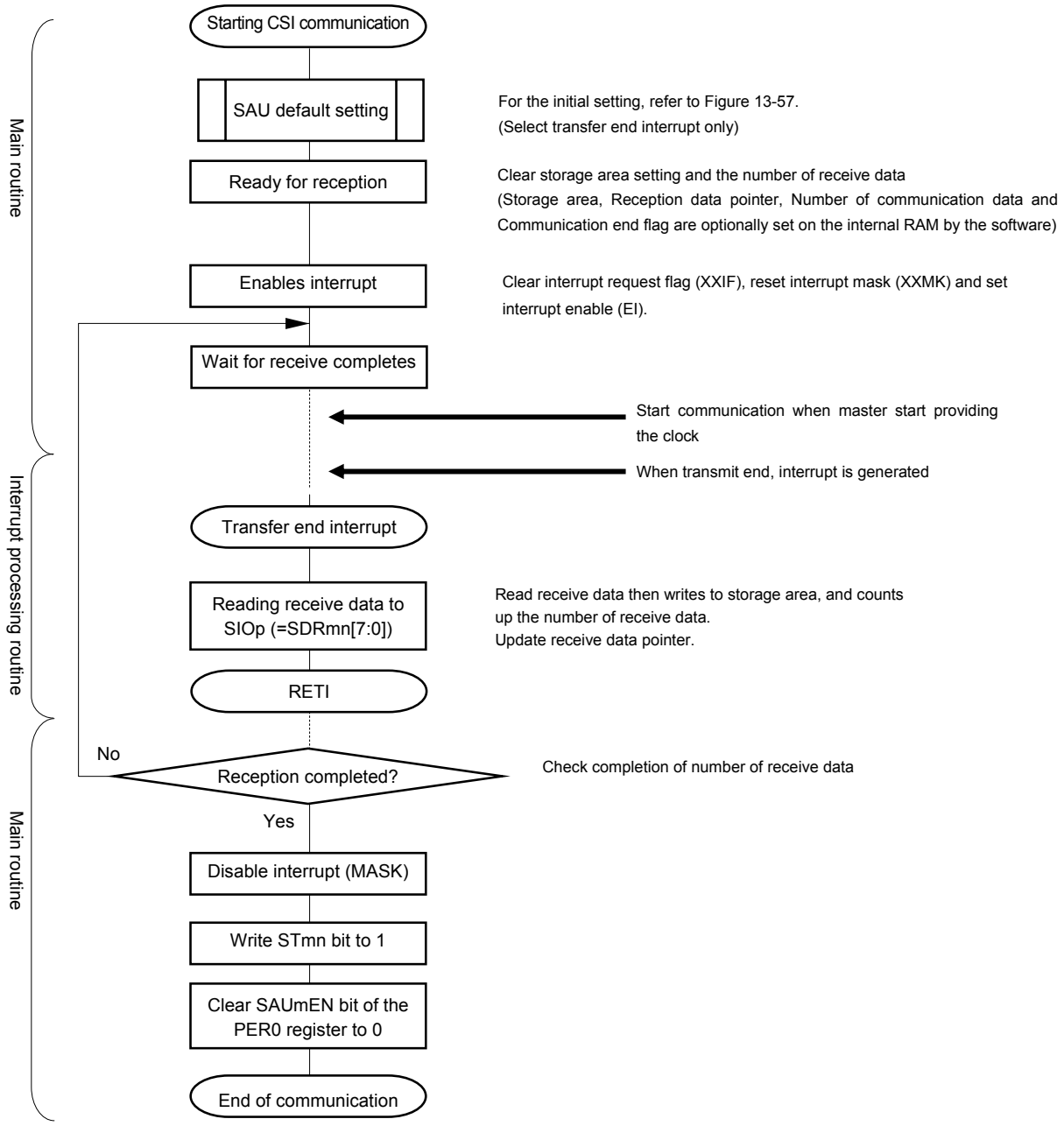

13.5.6 Slave transmission/reception

Slave transmission/reception is that the RL78 microcontroller transmits/receives data to/from another device in the state of a transfer clock being input from another device.

3-Wire Serial I/O	CSI00	CSI20	CSI21
Target channel	Channel 0 of SAU0	Channel 0 of SAU1	Channel 1 of SAU1
Pins used	SCK00, SI00, SO00	SCK20, SI20, SO20	–
Interrupt[Note 3]	INTCSI00	INTCSI20	–
	Transfer end interrupt (in single-transfer mode) or buffer empty interrupt (in continuous transfer mode) can be selected.		
Error detection flag[Note 3]	Overrun error detection flag (OVFmn) only		
Transfer data length[Note 3]	7 or 8 bits		
Transfer rate[Note 3]	Max. f_{MCK}/6 [Hz][Notes 1, 2].		
Data phase[Note 3]	Selectable by the DAPmn bit of the SCRmn register ● DAPmn = 0: Data I/O starts from the start of the operation of the serial clock. ● DAPmn = 1: Data I/O starts half a clock before the start of the serial clock operation.		
Clock phase[Note 3]	Selectable by the CKPmn bit of the SCRmn register ● CKPmn = 0: Non-reverse ● CKPmn = 1: Reverse		
Data direction[Note 3]	MSB or LSB first		

Notes 1. Because the external serial clock input to the SCK00 and SCK20 pins is sampled internally and used, the fastest transfer rate is f_{MCK}/6 [Hz].

2. Use this operation within a range that satisfies the conditions above and the peripheral functions characteristics in the electrical specifications (see **CHAPTER 30 ELECTRICAL SPECIFICATIONS**).

3. CSI21 cannot be used for slave transmission/reception.

Remarks 1. f_{MCK}: Operation clock frequency of target channel
f_{CLK}: Serial clock frequency

2. m: Unit number (m = 0, 1), n: Channel number (n = 0), mn = 00, 10

(1) Register setting

Figure 13-62. Example of Contents of Registers for Slave Transmission/Reception of 3-Wire Serial I/O (CSI00, CSI20) (1/2)

(a) Serial mode register mn (SMRmn)

	15	14	13	12	11	10	9	8	7	6	5	4	3	2	1	0
SMRmn	CKSmn 0/1	CCSmn 1	0	0	0	0	0	STSmn 0	0	SISmn0 0	1	0	0	MDmn2 0	MDmn1 0	MDmn0 0/1

Operation clock (f_{MCK}) of channel n
0: Prescaler output clock CKm0 set by the SPSm register
1: Prescaler output clock CKm1 set by the SPSm register

Interrupt source of channel n
0: Transfer end interrupt
1: Buffer empty interrupt

(b) Serial communication operation setting register mn (SCRmn)

	15	14	13	12	11	10	9	8	7	6	5	4	3	2	1	0
SCRmn	TXEmn 1	RXEmn 1	DAPmn 0/1	CKPmn 0/1	0	EOCmn 0	PTCmn1 0	PTCmn0 0	DIRmn 0/1	0	SLCmn1 0	SLCmn0 0	0	1	DLSmn1 1 Note	DLSmn0 0/1

Selection of the data and clock phase (For details about the setting, see **13.3 Registers Controlling Serial Array Unit**.)

Selection of data transfer sequence
0: Inputs/outputs data with MSB first
1: Inputs/outputs data with LSB first.

Setting of data length
0: 7-bit data length
1: 8-bit data length

(c) Serial data register mn (SDRmn) (lower 8 bits: SIOp)

	15	14	13	12	11	10	9	8	7	6	5	4	3	2	1	0
SDRmn	0000000 Baud rate setting							0	Transmit data setting/receive data register							

SIOp

(d) Serial output register m (SOm) … Sets only the bits of the target channel.

	15	14	13	12	11	10	9	8	7	6	5	4	3	2	1	0
SOm	0	0	0	0	0	CKOm2 ×	CKOm1 ×	CKOm0 ×	0	0	0	0	0	SOm2 0/1	SOm1 0/1	SOm0 0/1

Note Only provided for the SCR00, SCR01, SCR10 and SCR11 registers. This bit is fixed to 1 for the other registers.

Caution Be sure to set transmit data to the SIOp register before the clock from the master is started.

Remarks 1. Unit number (m = 0, 1), n: Channel number (n = 0), p: CSI number (p = 00, 20), mn = 00, 10

2. □ : Setting is fixed in the CSI slave transmission/reception mode,

▒ : Setting disabled (set to the initial value)

×: Bit that cannot be used in this mode (set to the initial value when not used in any mode)

0/1: Set to 0 or 1 depending on the usage of the user

Figure 13-62. Example of Contents of Registers for Slave Transmission/Reception of 3-Wire Serial I/O (CSI00, CSI20) (2/2)

(e) Serial output enable register m (SOEm) … Sets only the bits of the target channel to 1.

	15	14	13	12	11	10	9	8	7	6	5	4	3	2	1	0
SOEm	0	0	0	0	0	0	0	0	0	0	0	0	0	SOEm2 0/1	SOEm1 0/1	SOEm0 0/1

(f) Serial channel start register m (SSm) … Sets only the bits of the target channel to 1.

	15	14	13	12	11	10	9	8	7	6	5	4	3	2	1	0
SSm	0	0	0	0	0	0	0	0	0	0	0	0	SSm3 0/1	SSm2 0/1	SSm1 0/1	SSm0 0/1

Remarks 1. m: Unit number (m = 0, 1), n: Channel number (n = 0), p: CSI number (p = 00, 20), mn = 00, 10

2. ☐ : Setting disabled (set to the initial value)

×: Bit that cannot be used in this mode (set to the initial value when not used in any mode)

0/1: Set to 0 or 1 depending on the usage of the user

(2) Operation procedure

Figure 13-63. Initial Setting Procedure for Slave Transmission/Reception

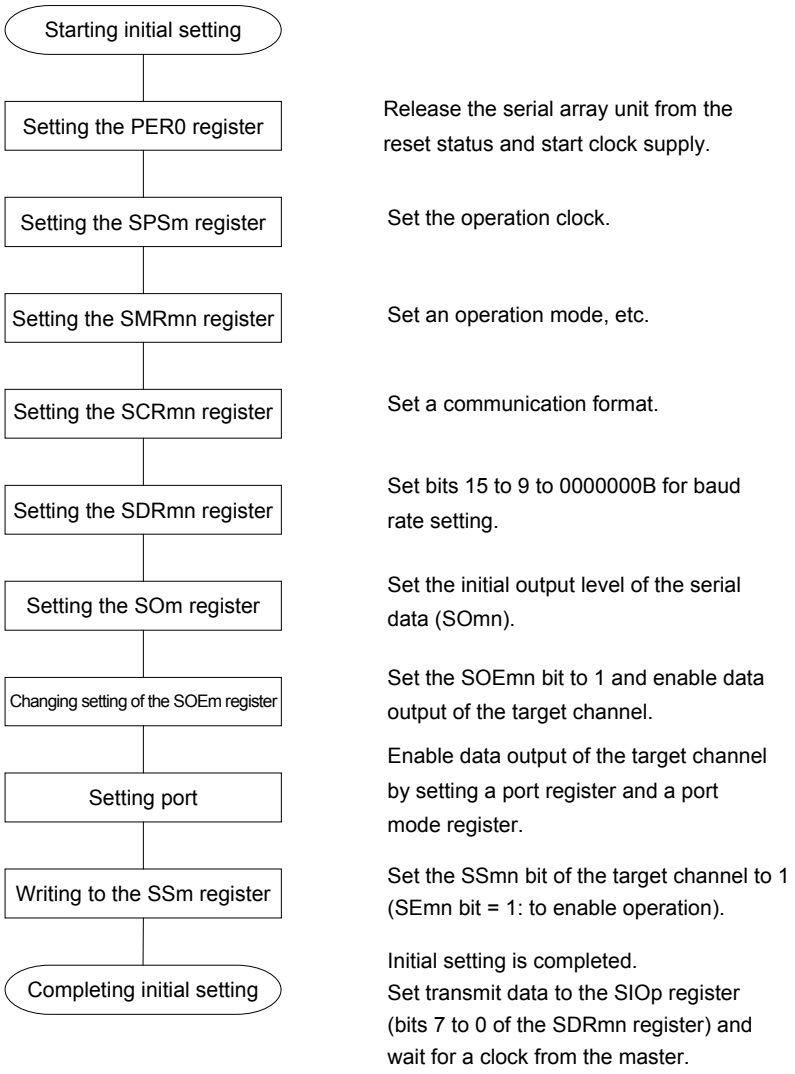

Figure 13-64. Procedure for Stopping Slave Transmission/Reception

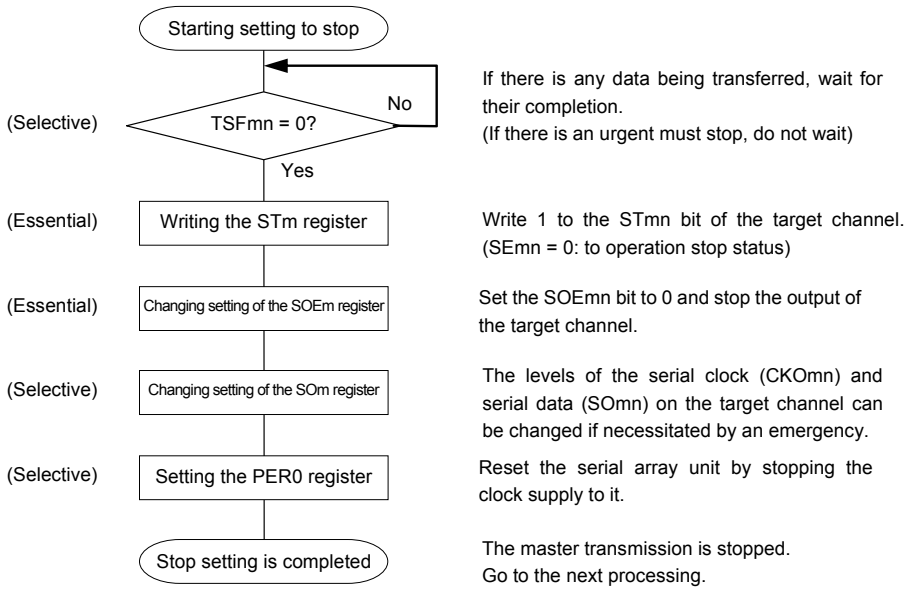

Figure 13-65. Procedure for Resuming Slave Transmission/Reception

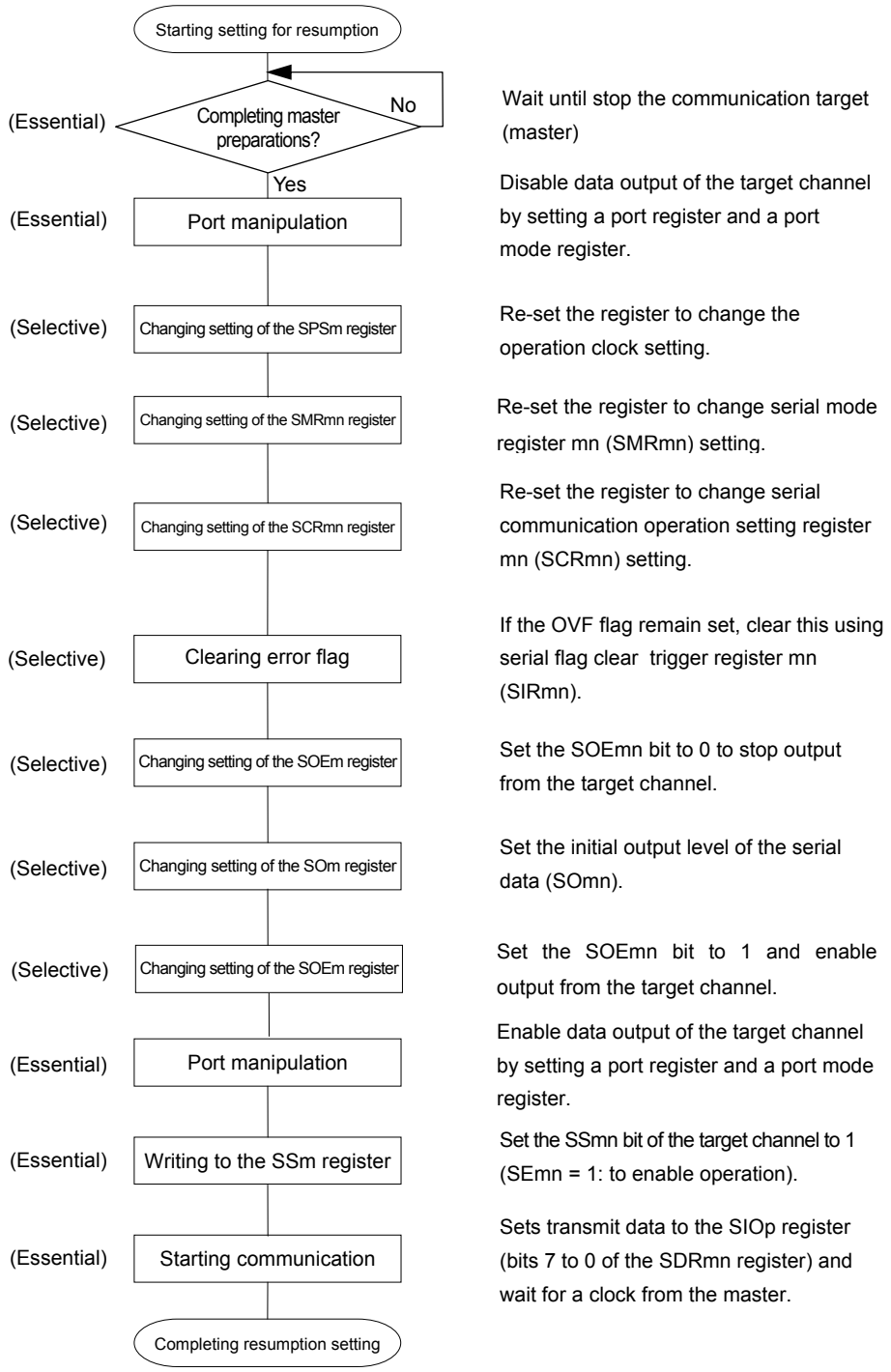

Cautions 1. Be sure to set transmit data to the SIOp register before the clock from the master is started.

2. If PER0 is rewritten while stopping the master transmission and the clock supply is stopped, wait until the transmission target (master) stops or transmission finishes, and then perform initialization instead of restarting the transmission.

(3) Processing flow (in single-transmission/reception mode)

Figure 13-66. Timing Chart of Slave Transmission/Reception (in Single-Transmission/Reception Mode) (Type 1: DAPmn = 0, CKPmn = 0)

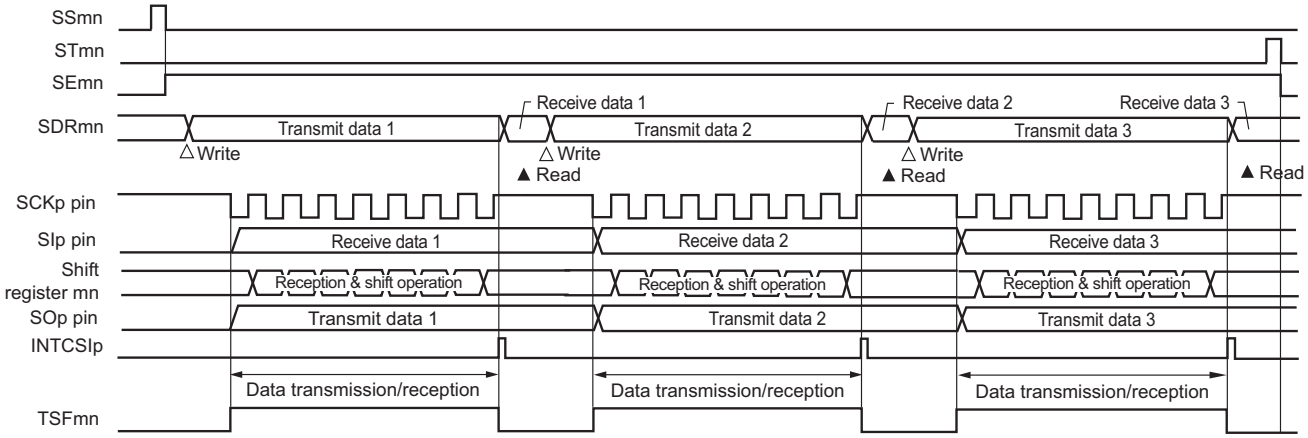

Remark m: Unit number (m = 0, 1), n: Channel number (n = 0), p: CSI number (p = 00, 20), mn = 00, 10

Figure 13-67. Flowchart of Slave Transmission/Reception (in Single- Transmission/Reception Mode)

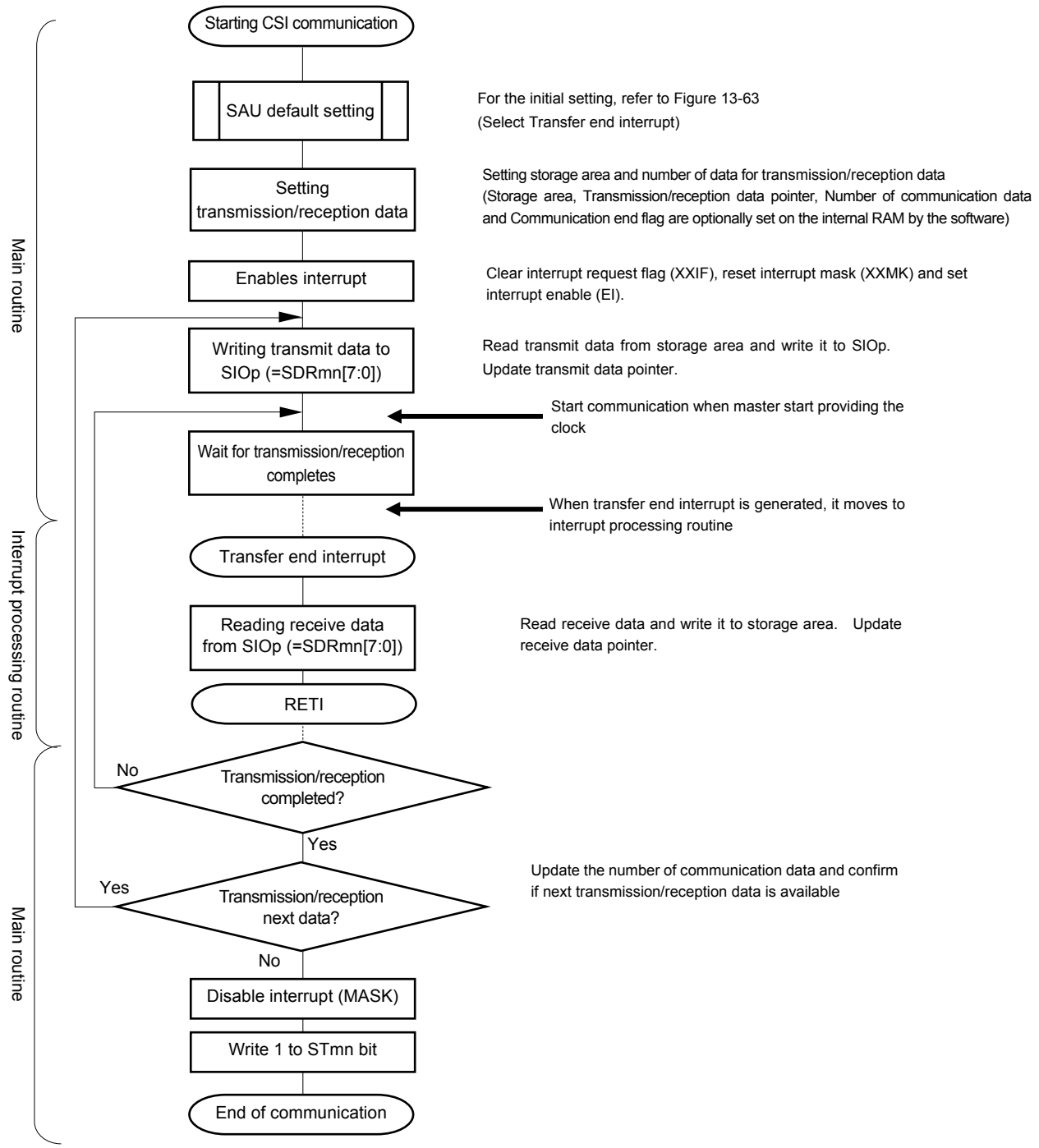

Caution Be sure to set transmit data to the SIOp register before the clock from the master is started.

(4) Processing flow (in continuous transmission/reception mode)

Figure 13-68. Timing Chart of Slave Transmission/Reception (in Continuous Transmission/Reception Mode) (Type 1: DAPmn = 0, CKPmn = 0)

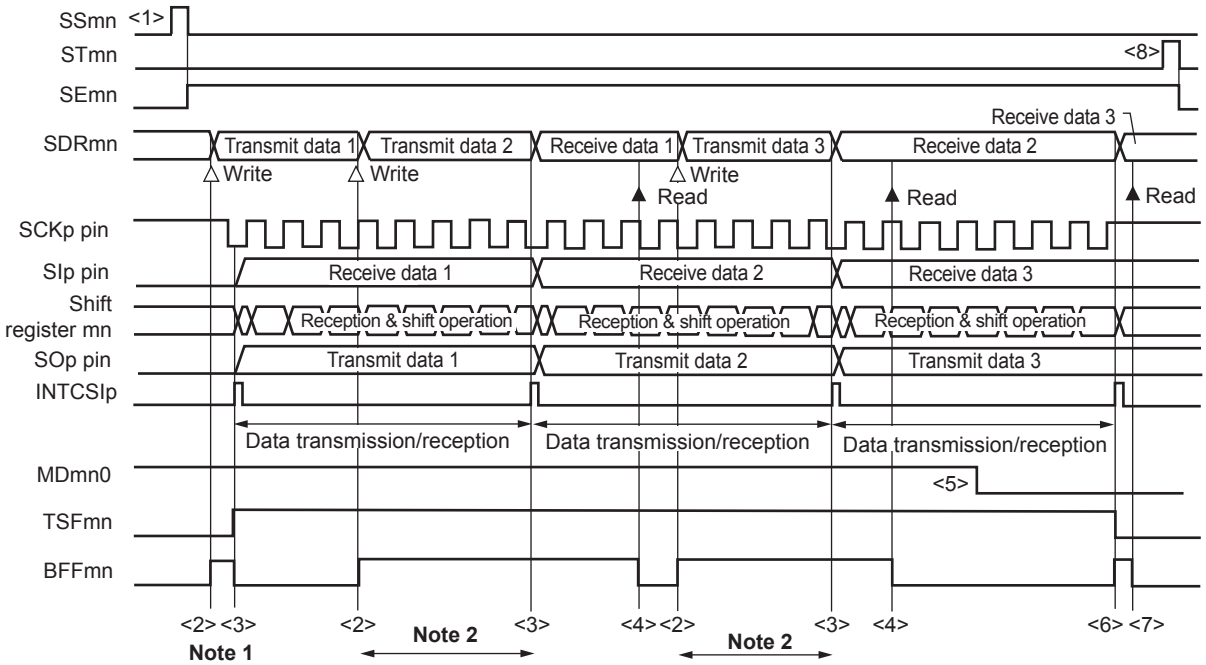

Notes 1. If transmit data is written to the SDRmn register while the BFFmn bit of serial status register mn (SSRmn) is 1 (valid data is stored in serial data register mn (SDRmn)), the transmit data is overwritten.

2. The transmit data can be read by reading the SDRmn register during this period. At this time, the transfer operation is not affected.

Caution The MDmn0 bit of serial mode register mn (SMRmn) can be rewritten even during operation. However, rewrite it before transfer of the last bit is started, so that it has been rewritten before the transfer end interrupt of the last transmit data.

Remarks 1. <1> to <8> in the figure correspond to <1> to <8> in **Figure 13-69 Flowchart of Slave Transmission/Reception (in Continuous Transmission/Reception Mode**).

2. m: Unit number (m = 0, 1), n: Channel number (n = 0), p: CSI number (p = 00, 20), mn = 00, 10

Figure 13-69. Flowchart of Slave Transmission/Reception (in Continuous Transmission/Reception Mode)

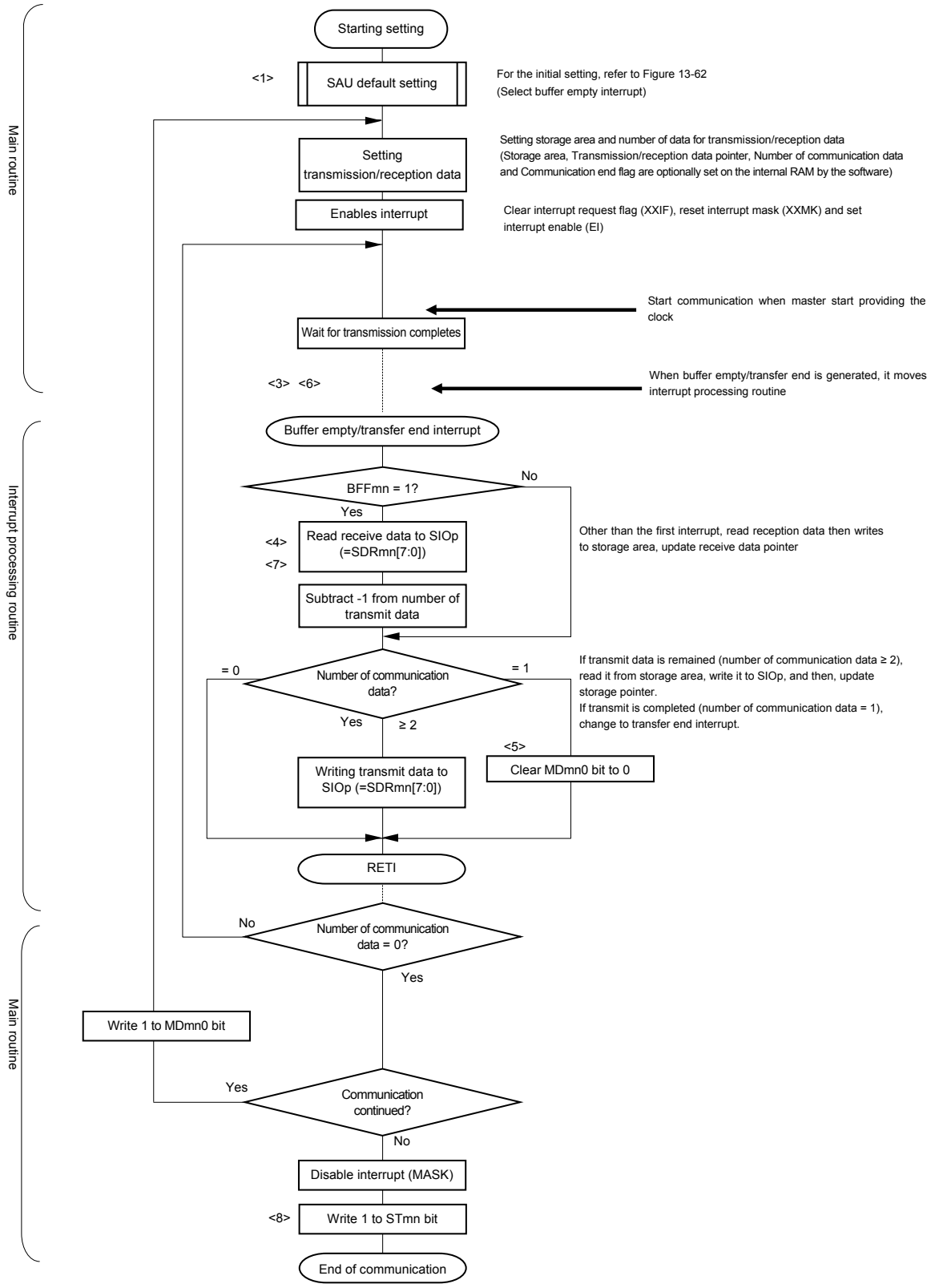

Caution Be sure to set transmit data to the SIOp register before the clock from the master is started.

Remark <1> to <8> in the figure correspond to <1> to <8> in **Figure 13-68 Timing Chart of Slave Transmission/Reception (in Continuous Transmission/Reception Mode)**.

13.5.7 SNOOZE mode function

SNOOZE mode makes CSI operate reception by SCKp pin input detection while the STOP mode. Normally CSI stops communication in the STOP mode. But, using the SNOOZE mode makes reception CSI operate unless the CPU operation by detecting SCKp pin input.

When using the CSI in SNOOZE mode, make the following setting before switching to the STOP mode (see **Figure 12-70 Flowchart of SNOOZE Mode Operation (once startup)** and **Figure 12-72 Flowchart of SNOOZE Mode Operation (continuous startup)**).

- When using the SNOOZE mode function, set the SWCm bit of serial standby control register m (SSCm) to 1 just before switching to the STOP mode. After the initial setting has been completed, set the SSm0 bit of serial channel start register m (SSm) to 1.
- The CPU shifts to the SNOOZE mode on detecting the valid edge of the SCKp signal following a transition to the STOP mode. A CSIp starts reception on detecting input of the serial clock on the SCKp pin..

Cautions 1. The SNOOZE mode can only be specified when the high-speed on-chip oscillator clock is selected for f_{CLK}.

2. The maximum transfer rate when using CSIp in the SNOOZE mode is 1 Mbps.

Remark m = 0; p = 00

(1) SNOOZE mode operation (once startup)

Figure 13-70. Timing Chart of SNOOZE Mode Operation (once startup) (Type 1: DAPmn = 0, CKPmn = 0)

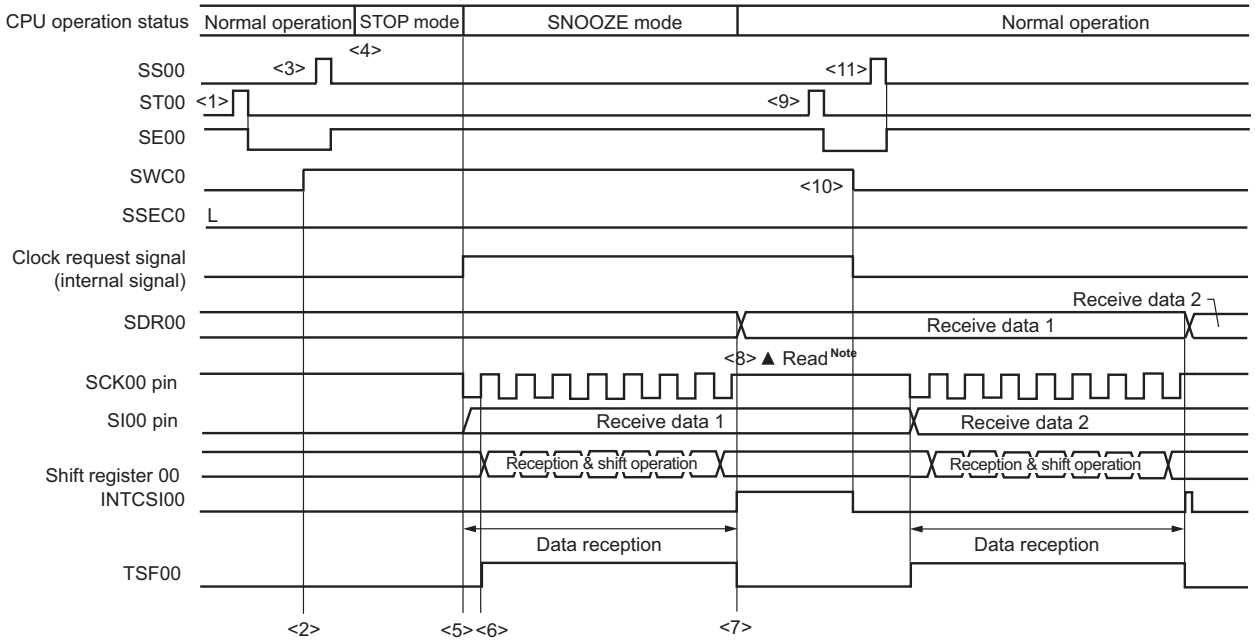

Note Only read received data while SWCm = 1 and before the next valid edge of the SCKp pin input is detected.

Cautions 1. Before switching to the SNOOZE mode or after reception operation in the SNOOZE mode finishes, set the STm0 bit to 1 (clear the SEm0 bit and stop the operation).

2. When SWCm = 1, the BFFm0 and OVFm0 flags will not change.

Remarks 1. <1> to <11> in the figure correspond to <1> to <11> in **Figure 13-71 Flowchart of SNOOZE Mode Operation (once startup)**.

2. m = 0; p = 00

Figure 13-71. Flowchart of SNOOZE Mode Operation (once startup)

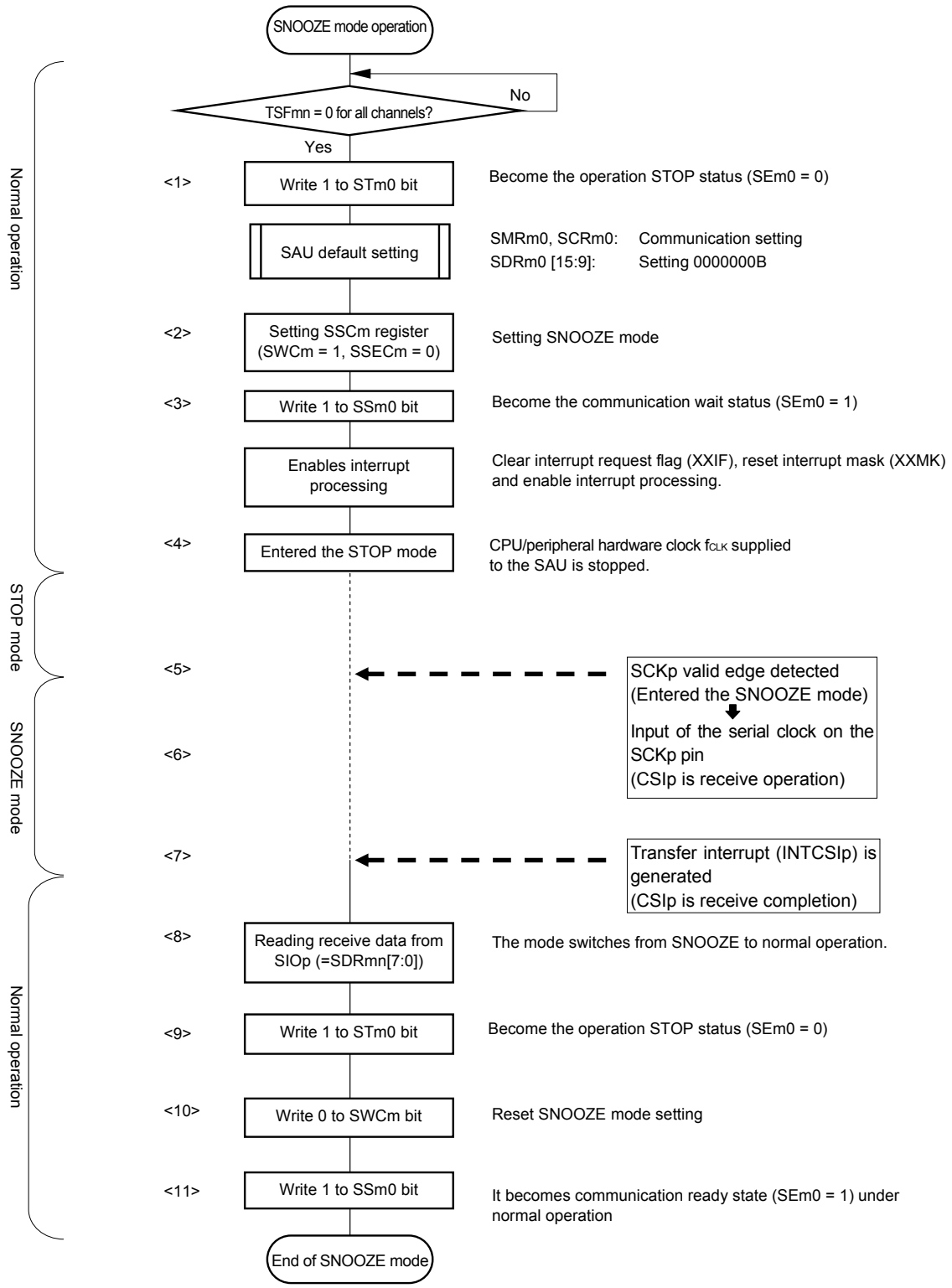

Remarks 1. <1> to <11> in the figure correspond to <1> to <11> in **Figure 13-70 Timing Chart of SNOOZE Mode Operation (once startup)**.

2. m = 0; p = 00.

(2) SNOOZE mode operation (continuous startup)

Figure 13-72. Timing Chart of SNOOZE Mode Operation (continuous startup) (Type 1: DAPmn = 0, CKPmn = 0)

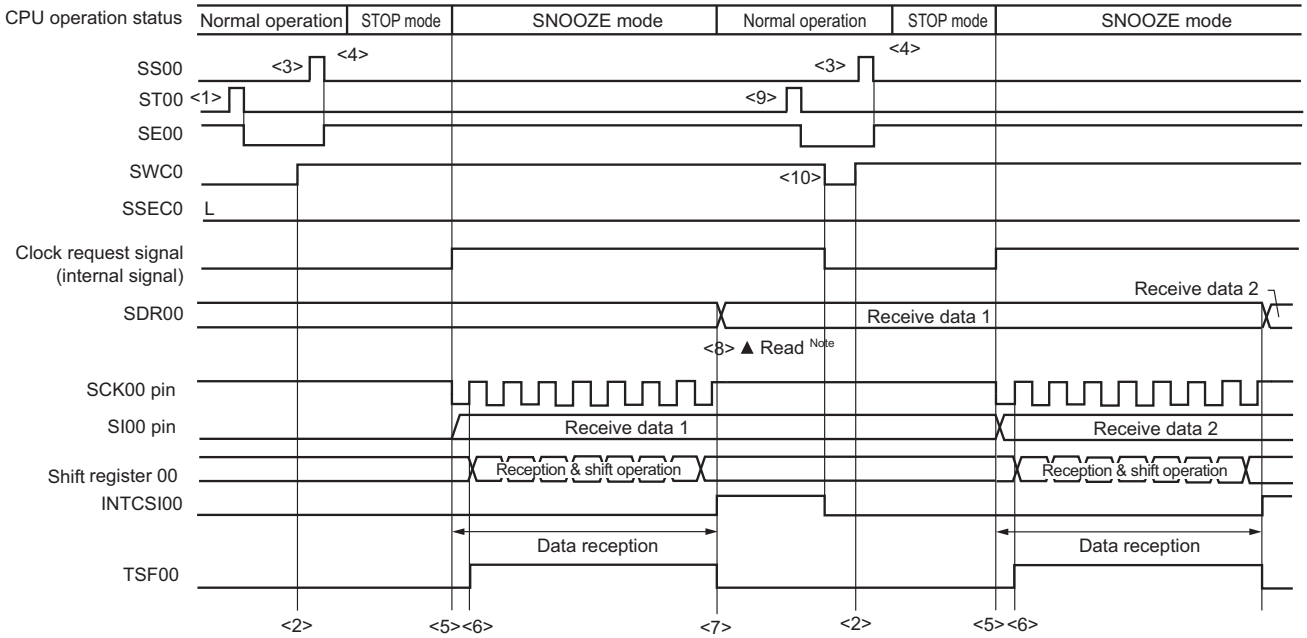

Note Only read received data while SWCm = 1 and before the next valid edge of the SCKp pin input is detected.

Cautions 1. Before switching to the SNOOZE mode or after reception operation in the SNOOZE mode finishes, set the STm0 bit to 1 (clear the SEm0 bit and stop the operation). After the receive operation completes, also clear the SWCm bit to 0 (SNOOZE mode release).

2. When SWCm = 1, the BFFm0 and OVFm0 flags will not change.

Remarks 1. <1> to <10> in the figure correspond to <1> to <10> in **Figure 13-73 Flowchart of SNOOZE Mode Operation (continuous startup)**.

2. m = 0; p = 00

Figure 13-73. Flowchart of SNOOZE Mode Operation (continuous startup)

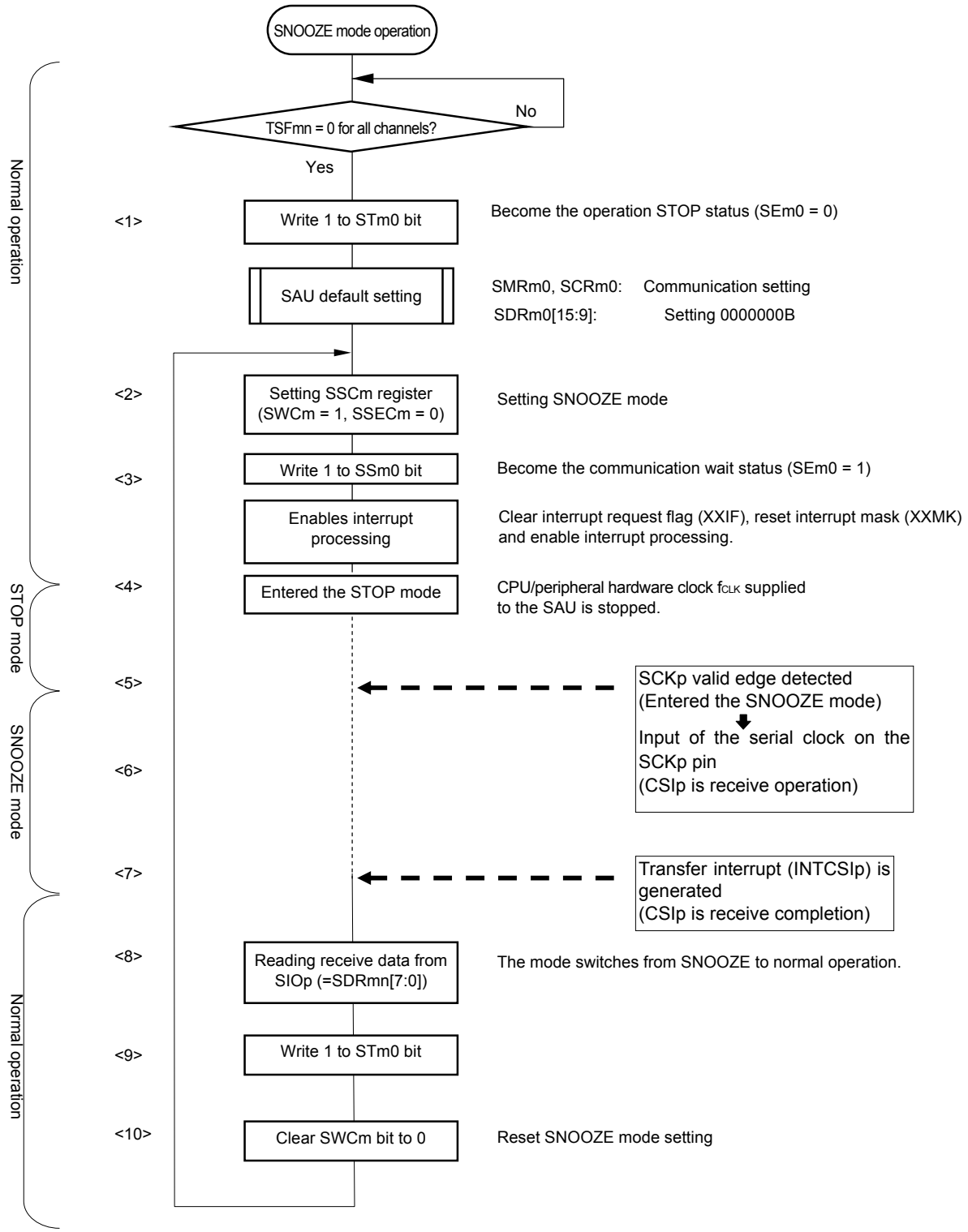

Remarks 1. <1> to <10> in the figure correspond to <1> to <10> in **Figure 13-72 Timing Chart of SNOOZE Mode Operation (continuous startup)**.

2. m = 0; p = 00

13.5.8 Calculating transfer clock frequency

The transfer clock frequency for 3-wire serial I/O (CSI00, CSI20, CSI21) communication can be calculated by the following expressions.

(1) Master

(Transfer clock frequency) = {Operation clock (f_{MCK}) frequency of target channel} ÷ (SDRmn[15:9] + 1) ÷ 2 [Hz]

(2) Slave

(Transfer clock frequency) = {Frequency of serial clock (SCK) supplied by master}[Note] [Hz]

Note The permissible maximum transfer clock frequency is f_{MCK}/6.

Remark The value of SDRmn[15:9] is the value of bits 15 to 9 of serial data register mn (SDRmn) (0000000B to 1111111B) and therefore is 0 to 127.

The operation clock (f_{MCK}) is determined by serial clock select register m (SPSm) and bit 15 (CKSmn) of serial mode register mn (SMRmn).

Table 13-2. Selection of Operation Clock For 3-Wire Serial I/O

SMRmn Register	SPSm Register								Operation Clock (f_{MCK})[Note]	
CKSmn	PRS m13	PRS m12	PRS m11	PRS m10	PRS m03	PRS m02	PRS m01	PRS m00		f_{CLK} = 32 MHz
0	X	X	X	X	0	0	0	0	f_{CLK}	32 MHz
	X	X	X	X	0	0	0	1	$f_{CLK}/2$	16 MHz
	X	X	X	X	0	0	1	0	$f_{CLK}/2^2$	8 MHz
	X	X	X	X	0	0	1	1	$f_{CLK}/2^3$	4 MHz
	X	X	X	X	0	1	0	0	$f_{CLK}/2^4$	2 MHz
	X	X	X	X	0	1	0	1	$f_{CLK}/2^5$	1 MHz
	X	X	X	X	0	1	1	0	$f_{CLK}/2^6$	500 kHz
	X	X	X	X	0	1	1	1	$f_{CLK}/2^7$	250 kHz
	X	X	X	X	1	0	0	0	$f_{CLK}/2^8$	125 kHz
	X	X	X	X	1	0	0	1	$f_{CLK}/2^9$	62.5 kHz
	X	X	X	X	1	0	1	0	$f_{CLK}/2^{10}$	31.25 kHz
	X	X	X	X	1	0	1	1	$f_{CLK}/2^{11}$	15.63 kHz
	X	X	X	X	1	1	0	0	$f_{CLK}/2^{12}$	7.81 kHz
	X	X	X	X	1	1	0	1	$f_{CLK}/2^{13}$	3.91 kHz
	X	X	X	X	1	1	1	0	$f_{CLK}/2^{14}$	1.95 kHz
	X	X	X	X	1	1	1	1	$f_{CLK}/2^{15}$	977 Hz
1	0	0	0	0	X	X	X	X	f_{CLK}	32 MHz
	0	0	0	1	X	X	X	X	$f_{CLK}/2$	16 MHz
	0	0	1	0	X	X	X	X	$f_{CLK}/2^2$	8 MHz
	0	0	1	1	X	X	X	X	$f_{CLK}/2^3$	4 MHz
	0	1	0	0	X	X	X	X	$f_{CLK}/2^4$	2 MHz
	0	1	0	1	X	X	X	X	$f_{CLK}/2^5$	1 MHz
	0	1	1	0	X	X	X	X	$f_{CLK}/2^6$	500 kHz
	0	1	1	1	X	X	X	X	$f_{CLK}/2^7$	250 kHz
	1	0	0	0	X	X	X	X	$f_{CLK}/2^8$	125 kHz
	1	0	0	1	X	X	X	X	$f_{CLK}/2^9$	62.5 kHz
	1	0	1	0	X	X	X	X	$f_{CLK}/2^{10}$	31.25 kHz
	1	0	1	1	X	X	X	X	$f_{CLK}/2^{11}$	15.63 kHz
	1	1	0	0	X	X	X	X	$f_{CLK}/2^{12}$	7.81 kHz
	1	1	0	1	X	X	X	X	$f_{CLK}/2^{13}$	3.91 kHz
	1	1	1	0	X	X	X	X	$f_{CLK}/2^{14}$	1.95 kHz
	1	1	1	1	X	X	X	X	$f_{CLK}/2^{15}$	977 Hz
Other than above									Setting prohibited	

Note When changing the clock selected for f_{CLK} (by changing the system clock control register (CKC) value), do so after having stopped (serial channel stop register m (STm) = 000FH) the operation of the serial array unit (SAU).

Remarks 1. X: Don't care

2. m: Unit number (m = 0, 1), n: Channel number (n = 0 when m = 0, n = 0, 1 when m = 1), mn = 00, 10, 11

13.5.9 Procedure for processing errors that occurred during 3-wire serial I/O (CSI00, CSI20, CSI21) communication

The procedure for processing errors that occurred during 3-wire serial I/O (CSI00, CSI20, CSI21) communication is described in Figure 13-74.

Figure 13-74. Processing Procedure in Case of Overrun Error

Software Manipulation	Hardware Status	Remark
Reads serial data register mn (SDRmn) →	The BFFmn bit of the SSRmn register is set to 0 and channel n is enabled to receive data.	This is to prevent an overrun error if the next reception is completed during error processing.
Reads serial status register mn (SSRmn).		Error type is identified and the read value is used to clear error flag.
Writes 1 to serial flag clear trigger register mn (SIRmn). →	Error flag is cleared.	Error can be cleared only during reading, by writing the value read from the SSRmn register to the SIRmn register without modification.

Remark m: Unit number (m = 0, 1), n: Channel number (n = 0 when m = 0, n = 0, 1 when m = 1), mn = 00, 10, 11

13.6 Operation of UART (UART0, UART1) Communication

This is a start-stop synchronization function using two lines: serial/data transmission (TxD) and serial/data reception (RxD) lines. By using these two communication lines, each data frame, which consist of a start bit, data, parity bit, and stop bit, is transferred asynchronously (using the internal baud rate) between the microcontroller and the other communication party. Full-duplex asynchronous communication UART communication can be performed by using a channel dedicated to transmission (even-numbered channel) and a channel dedicated to reception (odd-numbered channel). The LIN-bus can be implemented by using UART2 with an external interrupt (INTP0).

[Data transmission/reception]

- Data length of 7, 8, or 9 bits[Note]
- Select the MSB/LSB first
- Level setting of transmit/receive data (selecting whether to reverse the level)
- Parity bit appending and parity check functions
- Stop bit appending, stop bit check function

[Interrupt function]

- Transfer end interrupt/buffer empty interrupt
- Error interrupt in case of framing error, parity error, or overrun error

[Error detection flag]

- Framing error, parity error, or overrun error

In addition, UART0 reception (by the following channels) supports the SNOOZE mode. When RxD0 pin input is detected while in the STOP mode, the SNOOZE mode makes data reception that does not require the CPU possible. Only UART0 can be specified for the reception baud rate adjustment function.

UART0 uses channels 0 and 1 of SAU0.

UART1 uses channels 2 and 3 of SAU0.

Note Only UART0 can be specified for the 9-bit data length.

Unit	Channel	Used as CSI	Used as UART	Used as Simplified I^2C
0	0	CSI00	UART0	IIC00
	1	–		–
	2	–	UART1	–
	3	–		–
1	0	CSI20	–	IIC20
	1	CSI21[Note]		–

Note It is dedicated for communication between the MCU and RF transceiver.

Select any function for each channel. Only the selected function is possible. If UART0 is selected for channels 0 and 1 of unit 0, for example, these channels cannot be used for CSI00. At this time, however, channel 2, 3, or other channels of the same unit can be used for a function other than UART0, such as UART1.

Caution When using a serial array unit for UART, both the transmitter side (even-numbered channel) and the receiver side (odd-numbered channel) can only be used for UART.

UART performs the following two types of communication operations.

- UART transmission (See **13.6.1**.)
- UART reception (See **13.6.2**.)

13.6.1 UART transmission

UART transmission is an operation to transmit data from the RL78 microcontroller to another device asynchronously (start-stop synchronization).

Of two channels used for UART, the even channel is used for UART transmission.

UART	UART0	UART1
Target channel	Channel 0 of SAU0	Channel 2 of SAU0
Pins used	TxD0	TxD1
Interrupt	INTST0	INTST1
	Transfer end interrupt (in single-transfer mode) or buffer empty interrupt (in continuous transfer mode) can be selected.	
Error detection flag	None	
Transfer data length	7, 8, or 9 bits[Note 1]	
Transfer rate[Note 2]	Max. $f_{MCK}/6$ [bps] (SDRmn[15:9] = 2 or more), Min. $f_{CLK}/(2 \times 2^{15} \times 128)$ [bps]	
Data phase	Non-reverse output (default: high level) Reverse output (default: low level)	
Parity bit	The following selectable ● No parity bit ● Appending 0 parity ● Appending even parity ● Appending odd parity	
Stop bit	The following selectable ● Appending 1 bit ● Appending 2 bits	
Data direction	MSB or LSB first	

Notes 1. Only UART0 can be specified for the 9-bit data length.

2. Use this operation within a range that satisfies the conditions above and the peripheral functions characteristics in the electrical specifications (see **CHAPTER 30 ELECTRICAL SPECIFICATIONS**).

Remarks 1. f_{MCK}: Operation clock frequency of target channel
f_{CLK}: System clock frequency

2. m: Unit number (m = 0), n: Channel number (n = 0, 2), mn = 00, 02

(1) Register setting

Figure 13-75. Example of Contents of Registers for UART Transmission of UART (UART0, UART1) (1/2)

(a) Serial mode register mn (SMRmn)

	15	14	13	12	11	10	9	8	7	6	5	4	3	2	1	0
SMRmn	CKSmn 0/1	CCSmn 0	0	0	0	0	0	0	0	0	1	0	0	MDmn2 0	MDmn1 1	MDmn0 0/1

Operation clock (f_{MCK}) of channel n
0: Prescaler output clock CKm0 set by the SPSm register
1: Prescaler output clock CKm1 set by the SPSm register

Interrupt source of channel n
0: Transfer end interrupt
1: Buffer empty interrupt

(b) Serial communication operation setting register mn (SCRmn)

	15	14	13	12	11	10	9	8	7	6	5	4	3	2	1	0
SCRmn	TXEmn 1	RXEmn 0	DAPmn 0	CKPmn 0	0	EOCmn 0	PTCmn1 0/1	PTCmn0 0/1	DIRmn 0/1	0	SLCmn1 0/1	SLCmn0 0/1	0	1	DLSmn1 0/1 Note	DLSmn0 0/1

Setting of parity bit
00B: No parity
01B: Appending 0 parity
10B: Appending Even parity
11B: Appending Odd parity

Selection of data transfer sequence
0: Inputs/outputs data with MSB first
1: Inputs/outputs data with LSB first.

Setting of stop bit
01B: Appending 1 bit
10B: Appending 2 bits

(c) Serial data register mn (SDRmn) (lower 8 bits: TXDq)

	15	14	13	12	11	10	9	8	7	6	5	4	3	2	1	0
SDRmn	Baud rate setting							0 Note	Transmit data setting							

TXDq

(d) Serial output level register 0 (SOL0) … Sets only the bits of the target channel.

	15	14	13	12	11	10	9	8	7	6	5	4	3	2	1	0
SOL0	0	0	0	0	0	0	0	0	0	0	0	0	0	SOLm2 0/1	0	SOLm0 0/1

0: Non-reverse (normal) transmission
1: Reverse transmission

Notes 1. Only provided for the SCR00 register. This bit is fixed to 1 for the other registers.

2. When UART0 performs 9-bit communication, bits 0 to 8 of the SDRm0 register are used as the transmission data specification area. Only UART0 can be specified for the 9-bit data length.

Remarks 1. m: Unit number (m = 0), n: Channel number (n = 0, 2), q: UART number (q = 0, 1), mn = 00, 02

2. □: Setting is fixed in the UART transmission mode, ▒: Setting disabled (set to the initial value)
×: Bit that cannot be used in this mode (set to the initial value when not used in any mode)
0/1: Set to 0 or 1 depending on the usage of the user

Figure 13-75. Example of Contents of Registers for UART Transmission of UART (UART0, UART1) (2/2)

(e) Serial output register m (SOm) … Sets only the bits of the target channel.

	15	14	13	12	11	10	9	8	7	6	5	4	3	2	1	0
SOm	0	0	0	0	0	CKOm2 ×	CKOm1 ×	CKOm0 ×	0	0	0	0	0	SOm2 0/1 Note	SOm1 ×	SOm0 0/1 Note

0: Serial data output value is "0"
1: Serial data output value is "1"

(f) Serial output enable register m (SOEm) … Sets only the bits of the target channel to 1.

	15	14	13	12	11	10	9	8	7	6	5	4	3	2	1	0
SOEm	0	0	0	0	0	0	0	0	0	0	0	0	0	SOEm2 0/1	SOEm1 ×	SOEm0 0/1

(g) Serial channel start register m (SSm) … Sets only the bits of the target channel to 1.

	15	14	13	12	11	10	9	8	7	6	5	4	3	2	1	0
SSm	0	0	0	0	0	0	0	0	0	0	0	0	SSm3 ×	SSm2 0/1	SSm1 ×	SSm0 0/1

Note Before transmission is started, be sure to set to 1 when the SOL0n bit of the target channel is set to 0, and set to 0 when the SOL0n bit of the target channel is set to 1. The value varies depending on the communication data during communication operation.

Remarks 1. m: Unit number (m = 0), n: Channel number (n = 0, 2), mn = 00, 02

2. ☐ : Setting disabled (set to the initial value)

×: Bit that cannot be used in this mode (set to the initial value when not used in any mode)

0/1: Set to 0 or 1 depending on the usage of the user

(2) Operation procedure

Figure 13-76. Initial Setting Procedure for UART Transmission

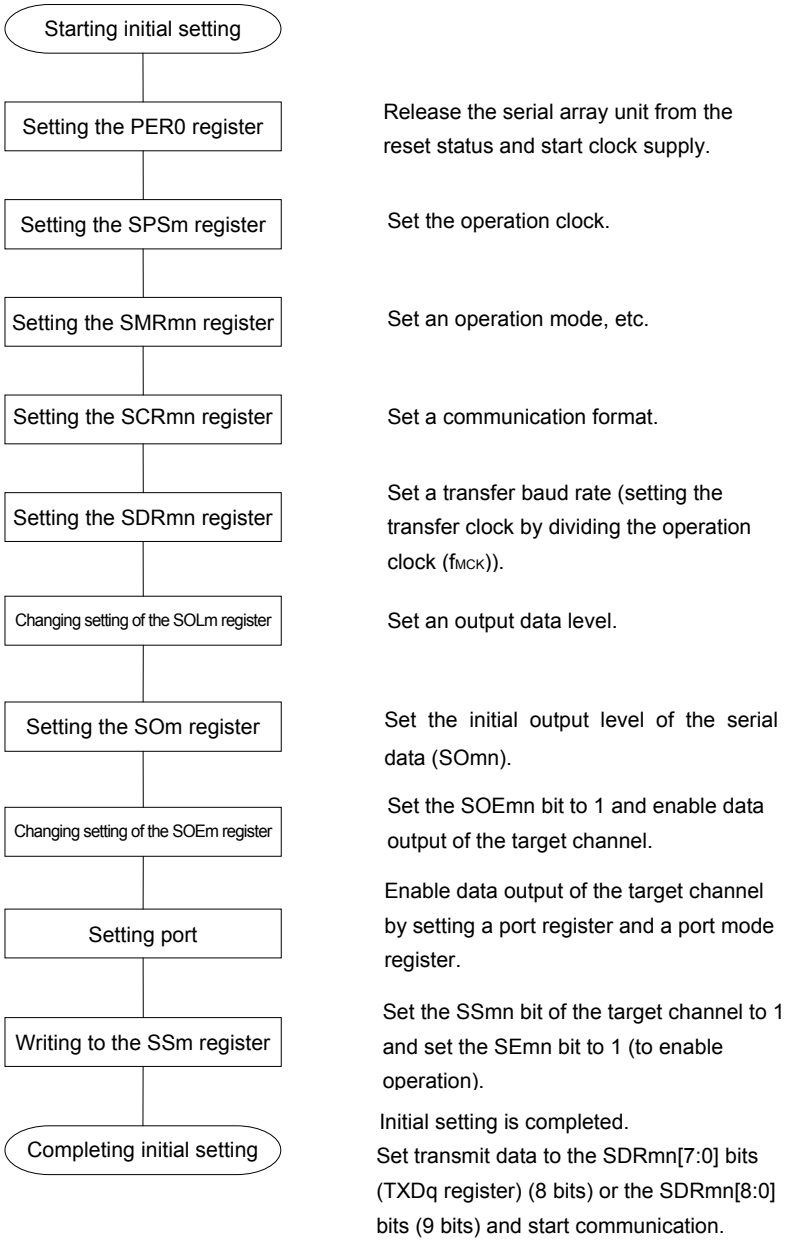

Figure 13-77. Procedure for Stopping UART Transmission

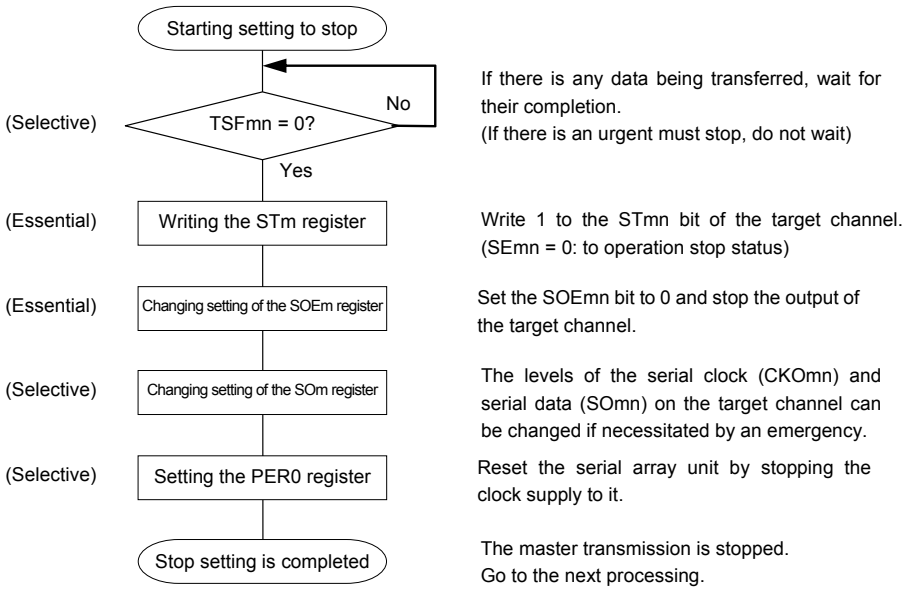

Figure 13-78. Procedure for Resuming UART Transmission

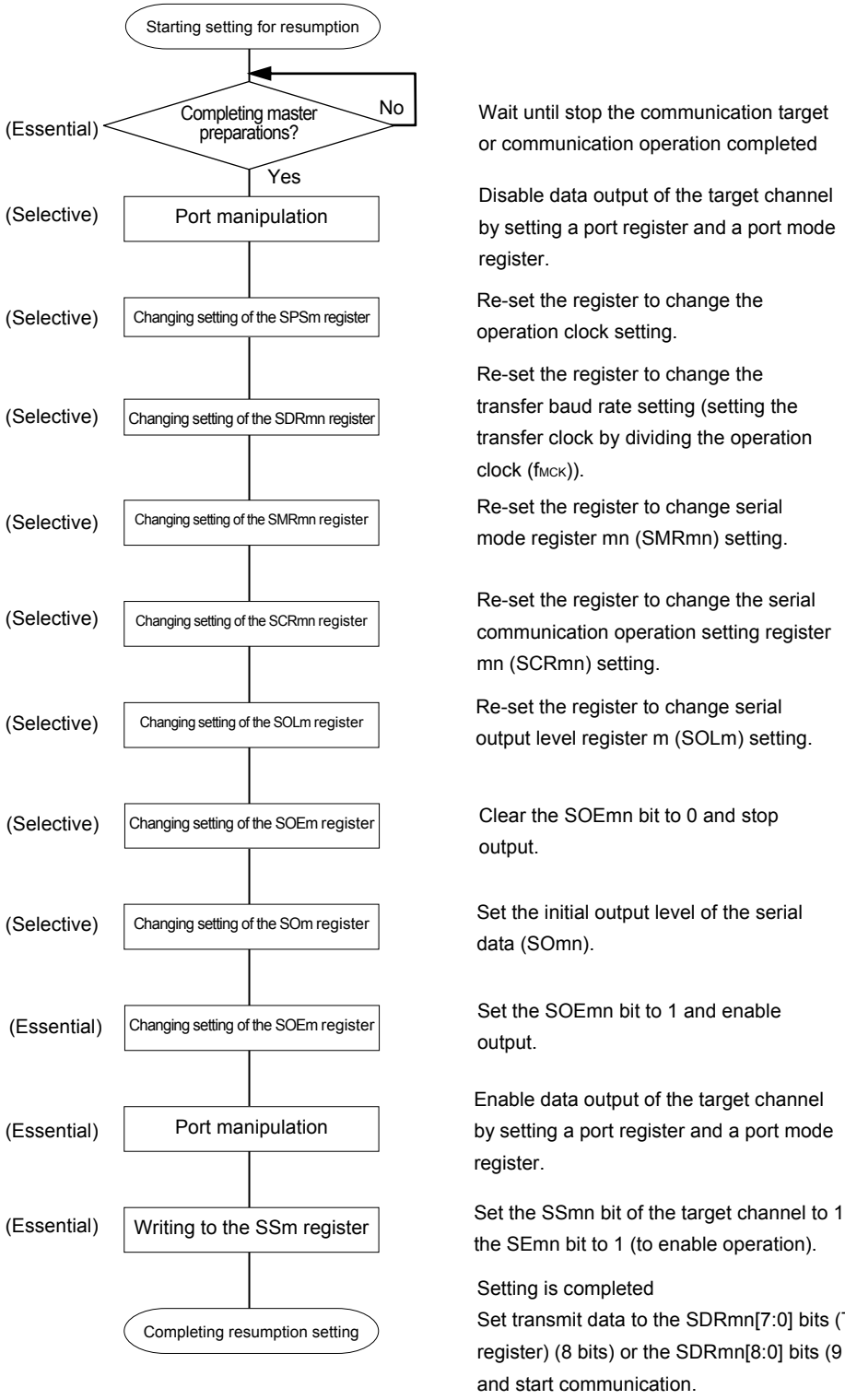

Remark If PER0 is rewritten while stopping the master transmission and the clock supply is stopped, wait until the transmission target stops or transmission finishes, and then perform initialization instead of restarting the transmission.

(3) Processing flow (in single-transmission mode)

Figure 13-79. Timing Chart of UART Transmission (in Single-Transmission Mode)

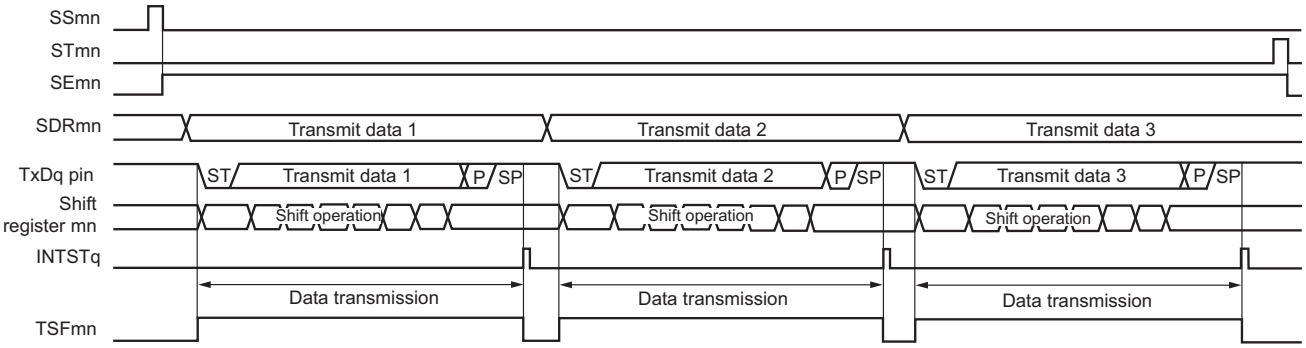

Remark m: Unit number (m = 0), n: Channel number (n = 0, 2), q: UART number (q = 0, 1)
mn = 00, 02

Figure 13-80. Flowchart of UART Transmission (in Single-Transmission Mode)

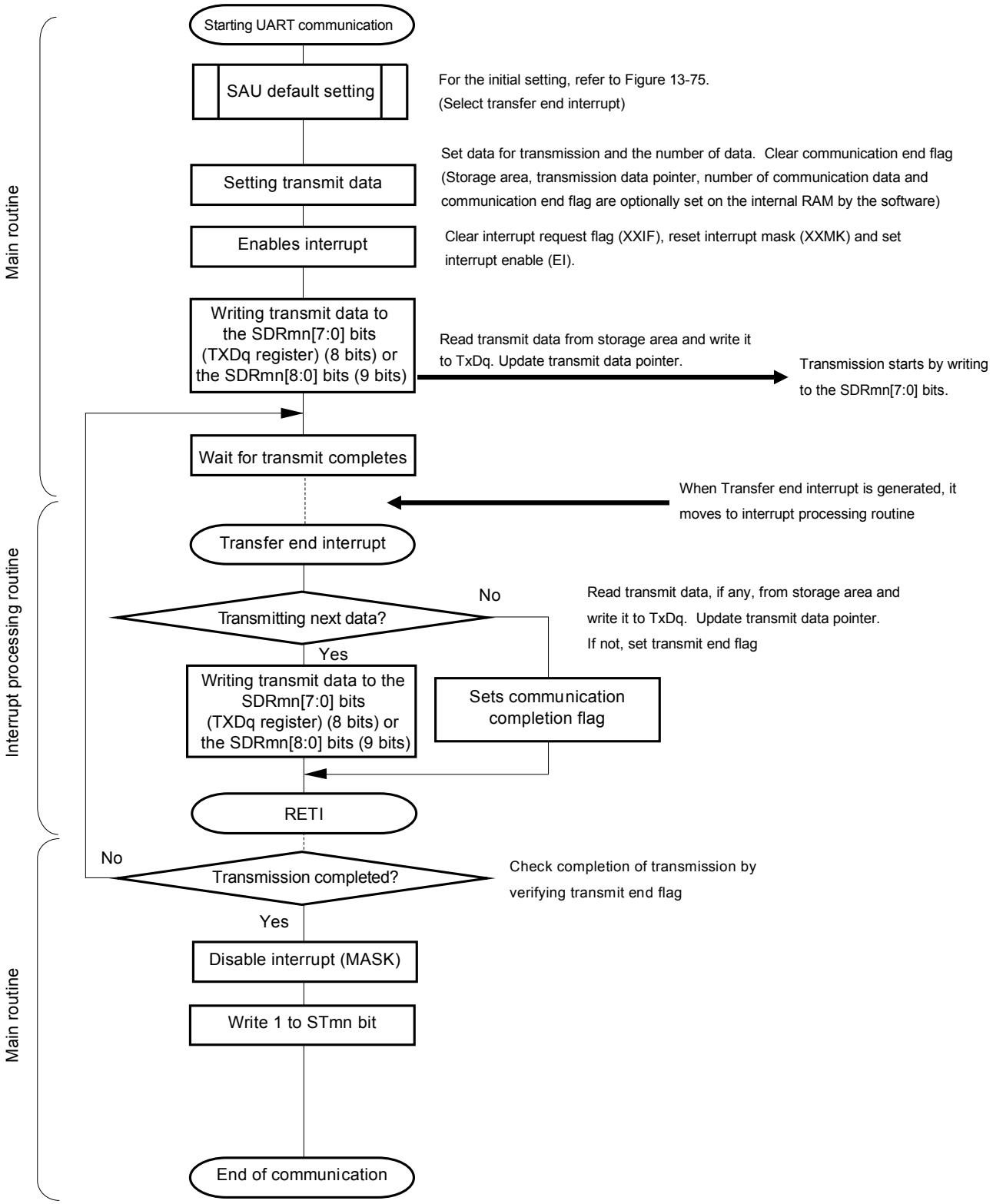

(4) Processing flow (in continuous transmission mode)

Figure 13-81. Timing Chart of UART Transmission (in Continuous Transmission Mode)

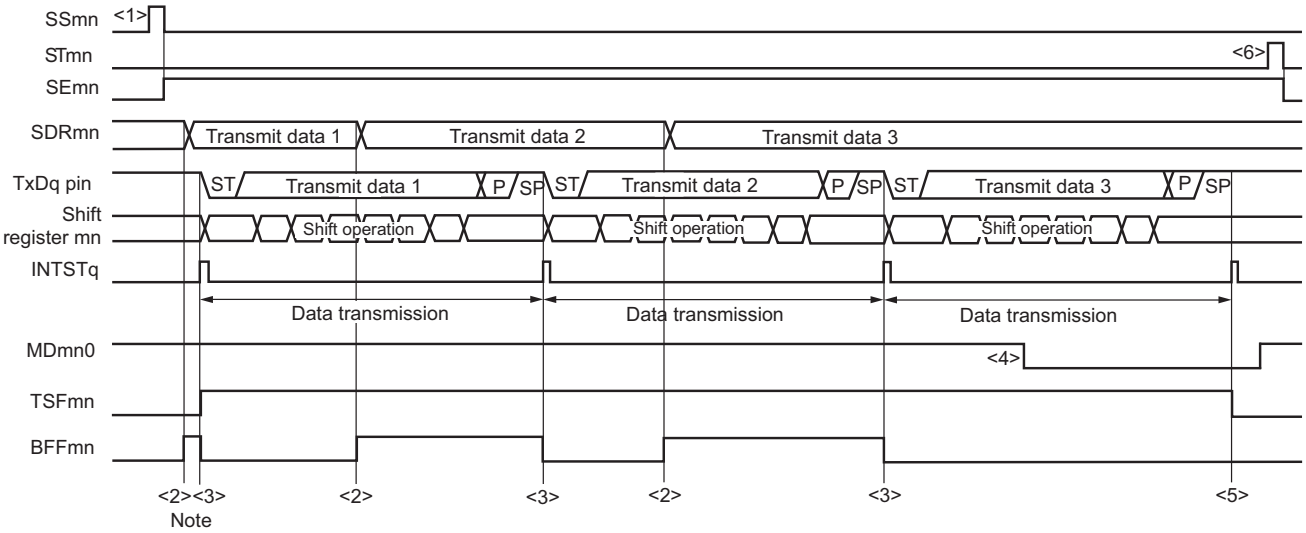

Note If transmit data is written to the SDRmn register while the BFFmn bit of serial status register mn (SSRmn) is 1 (valid data is stored in serial data register mn (SDRmn)), the transmit data is overwritten.

Caution **The MDmn0 bit of serial mode register mn (SSRmn) can be rewritten even during operation. However, rewrite it before transfer of the last bit is started, so that it will be rewritten before the transfer end interrupt of the last transmit data.**

Remark m: Unit number (m = 0), n: Channel number (n = 0, 2), q: UART number (q = 0, 1)
mn = 00, 02

Figure 13-82. Flowchart of UART Transmission (in Continuous Transmission Mode)

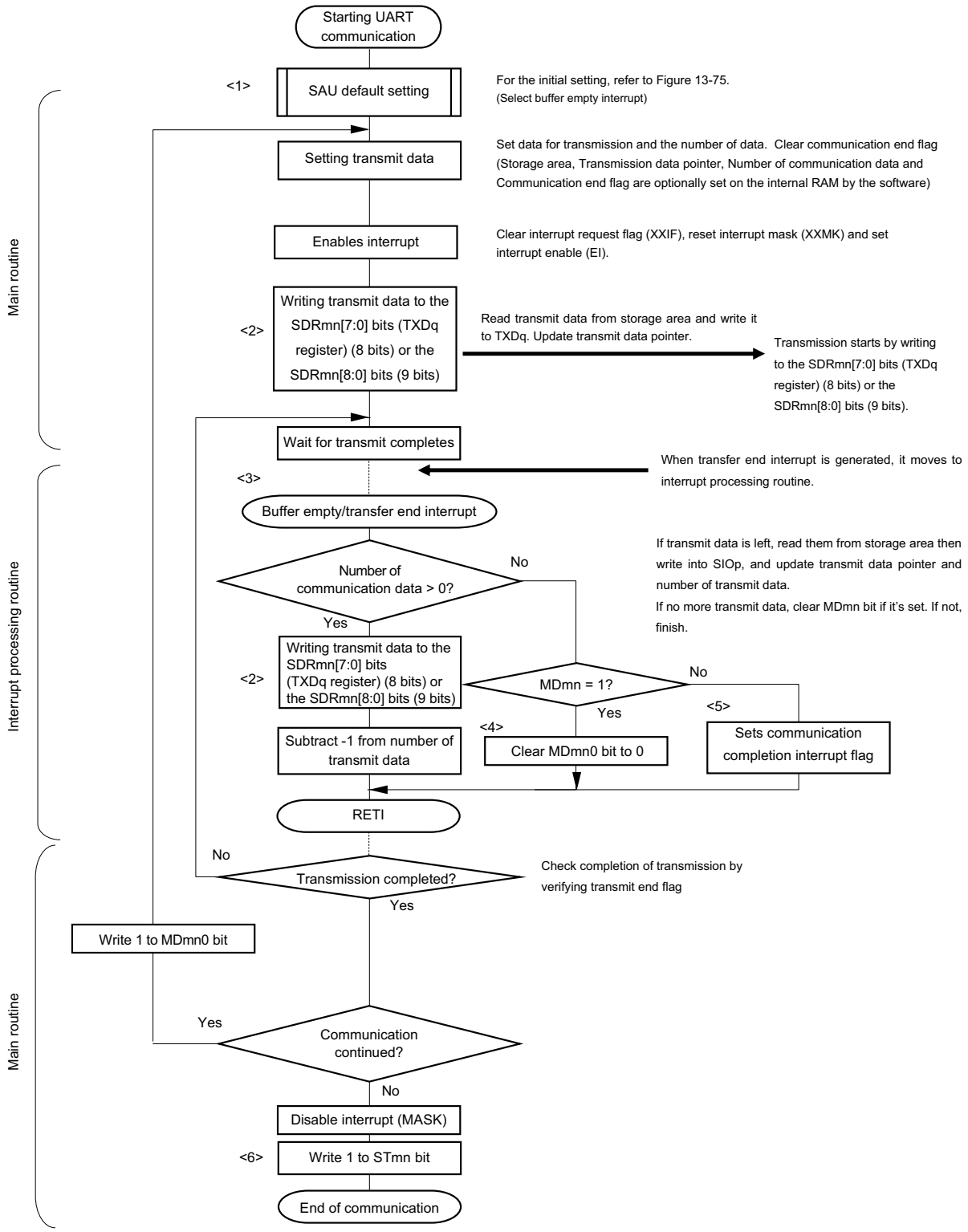

Remark <1> to <6> in the figure correspond to <1> to <6> in **Figure 13-80 Timing Chart of UART Transmission (in Continuous Transmission Mode)**.

13.6.2 UART reception

UART reception is an operation wherein the RL78 microcontroller asynchronously receives data from another device (start-stop synchronization).

For UART reception, the odd-number channel of the two channels used for UART is used. The SMR register of both the odd- and even-numbered channels must be set.

UART	UART0		UART1	
Target channel	Channel 1 of SAU0		Channel 3 of SAU0	
Pins used	RxD0		RxD1	
Interrupt	INTSR0		INTSR1	
	Transfer end interrupt only (Setting the buffer empty interrupt is prohibited.)			
Error interrupt	INTSRE0	INTSRE1	INTSRE2	INTSRE3
Error detection flag	● Framing error detection flag (FEFmn) ● Parity error detection flag (PEFmn) ● Overrun error detection flag (OVFmn)			
Transfer data length	7, 8 or 9 bits[Note 1]			
Transfer rate[Note 2]	Max. $f_{MCK}/6$ [bps] (SDRmn [15:9] = 2 or more), Min. $f_{CLK}/(2 \times 2^{15} \times 128)$ [bps]			
Data phase	Non-reverse output (default: high level) Reverse output (default: low level)			
Parity bit	The following selectable ● No parity bit (no parity check) ● No parity judgment (0 parity) ● Even parity check ● Odd parity check			
Stop bit	Appending 1 bit			
Data direction	MSB or LSB first			

Notes 1. Only UART0 can be specified for the 9-bit data length.

2. Use this operation within a range that satisfies the conditions above and the peripheral functions characteristics in the electrical specifications (see **CHAPTER 30 ELECTRICAL SPECIFICATIONS**).

Remarks 1. f_{MCK}: Operation clock frequency of target channel
f_{CLK}: System clock frequency

2. m: Unit number (m = 0), n: Channel number (n = 1, 3), mn = 01, 03

(1) Register setting

Figure 13-83. Example of Contents of Registers for UART Reception of UART (UART0, UART1) (1/2)

(a) Serial mode register mn (SMRmn)

	15	14	13	12	11	10	9	8	7	6	5	4	3	2	1	0
SMRmn	CKSmn 0/1	CCSmn 0	0	0	0	0	0	STSmn 1	0	SISmn0 0/1	1	0	0	MDmn2 0	MDmn1 1	MDmn0 0

Operation clock (f_{MCK}) of channel n
0: Prescaler output clock CKm0 set by the SPSm register
1: Prescaler output clock CKm1 set by the SPSm register

0: Normal reception
1: Reverse reception

Operation mode of channel n
0: Transfer end interrupt

(b) Serial mode register mr (SMRmr)

	15	14	13	12	11	10	9	8	7	6	5	4	3	2	1	0
SMRmr	CKSmr 0/1	CCSmr 0	0	0	0	0	0	0	0	0	1	0	0	MDmr2 0	MDmr1 1	MDmr0 0/1

Same setting value as CKSmn bit

Operation mode of channel r
0: Transfer end interrupt
1: Buffer empty interrupt

(c) Serial communication operation setting register mn (SCRmn)

	15	14	13	12	11	10	9	8	7	6	5	4	3	2	1	0
SCRmn	TXEmn 0	RXEmn 1	DAPmn 0	CKPmn 0	0	EOCmn 0/1	PTCmn1 0/1	PTCmn0 0/1	DIRmn 0/1	0	SLCmn1 0	SLCmn0 1	0	1	DLSmn1 0/1 Note 1	DLSmn0 0/1

Setting of parity bit
00B: No parity check
01B: No parity judgment
10B: Even parity check
11B: Odd parity check

Selection of data transfer sequence
0: Inputs/outputs data with MSB first
1: Inputs/outputs data with LSB first.

Setting of data length

(d) Serial data register mn (SDRmn) (lower 8 bits: RXDq)

	15	14	13	12	11	10	9	8	7	6	5	4	3	2	1	0
SDRmn	Baud rate setting							0 Note 2	Receive data register							

RXDq

Notes 1. Only provided for the SCR01 registers. This bit is fixed to 1 for the other registers.

2. When UART performs 9-bit communication, bits 0 to 8 of the SDRm1 register are used as the transmission data specification area. Only UART0 can be specified for the 9-bit data length.

Caution For the UART reception, be sure to set the SMRmr register of channel r to UART transmission mode that is to be paired with channel n.

Remarks 1. m: Unit number (m = 0), n: Channel number (n = 1, 3), mn = 01, 03
r: Channel number (r = n – 1), q: UART number (q = 0, 1)

2. ☐: Setting is fixed in the UART reception mode, ▒: Setting disabled (set to the initial value)
×: Bit that cannot be used in this mode (set to the initial value when not used in any mode)
0/1: Set to 0 or 1 depending on the usage of the user

Figure 13-83. Example of Contents of Registers for UART Reception of UART (UART0, UART1) (2/2)

(e) Serial output register m (SOm) … The register that not used in this mode.

	15	14	13	12	11	10	9	8	7	6	5	4	3	2	1	0
SOm	0	0	0	0	0	CKOm2 ×	CKOm1 ×	CKOm0 ×	0	0	0	0	0	SOm2 ×	SOm1 ×	SOm0 ×

(f) Serial output enable register m (SOEm) …The register that not used in this mode.

	15	14	13	12	11	10	9	8	7	6	5	4	3	2	1	0
SOEm	0	0	0	0	0	0	0	0	0	0	0	0	0	SOEm2 ×	SOEm1 ×	SOEm0 ×

(g) Serial channel start register m (SSm) … Sets only the bits of the target channel is 1.

	15	14	13	12	11	10	9	8	7	6	5	4	3	2	1	0
SSm	0	0	0	0	0	0	0	0	0	0	0	0	SSm3 0/1	SSm2 ×	SSm1 0/1	SSm0 ×

Caution For the UART reception, be sure to set the SMRmr register of channel r to UART Transmission mode that is to be paired with channel n.

Remarks 1. m: Unit number (m = 0), n: Channel number (n = 1, 3), mn = 01, 03
r: Channel number (r = n – 1), q: UART number (q = 0, 1)

2. ☐: Setting is fixed in the UART reception mode, ▒ : Setting disabled (set to the initial value)
×: Bit that cannot be used in this mode (set to the initial value when not used in any mode)
0/1: Set to 0 or 1 depending on the usage of the user

(2) Operation procedure

Figure 13-84. Initial Setting Procedure for UART Reception

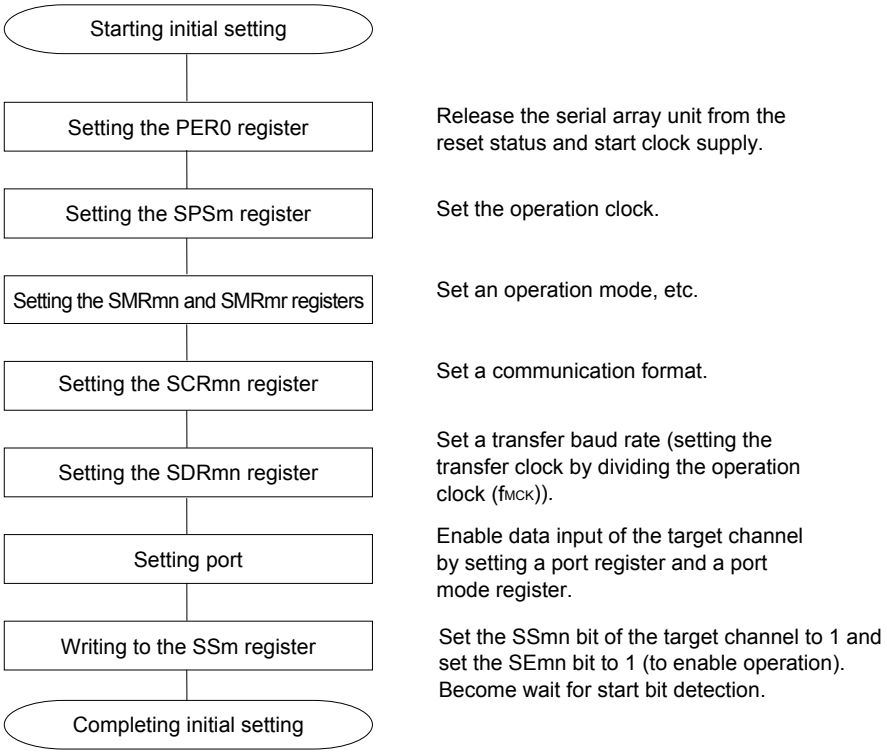

Caution Set the RXEmn bit of SCRmn register to 1, and then be sure to set SSmn to 1 after 4 or more f_{MCK} clocks have elapsed.

Figure 13-85. Procedure for Stopping UART Reception

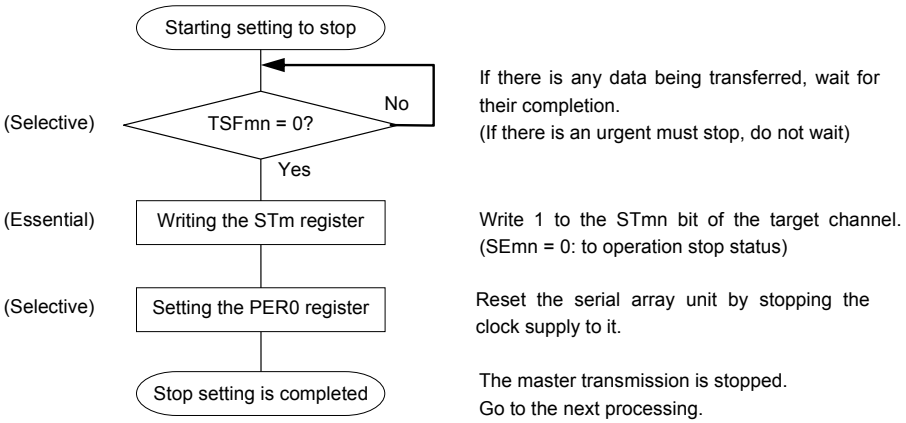

Figure 13-86. Procedure for Resuming UART Reception

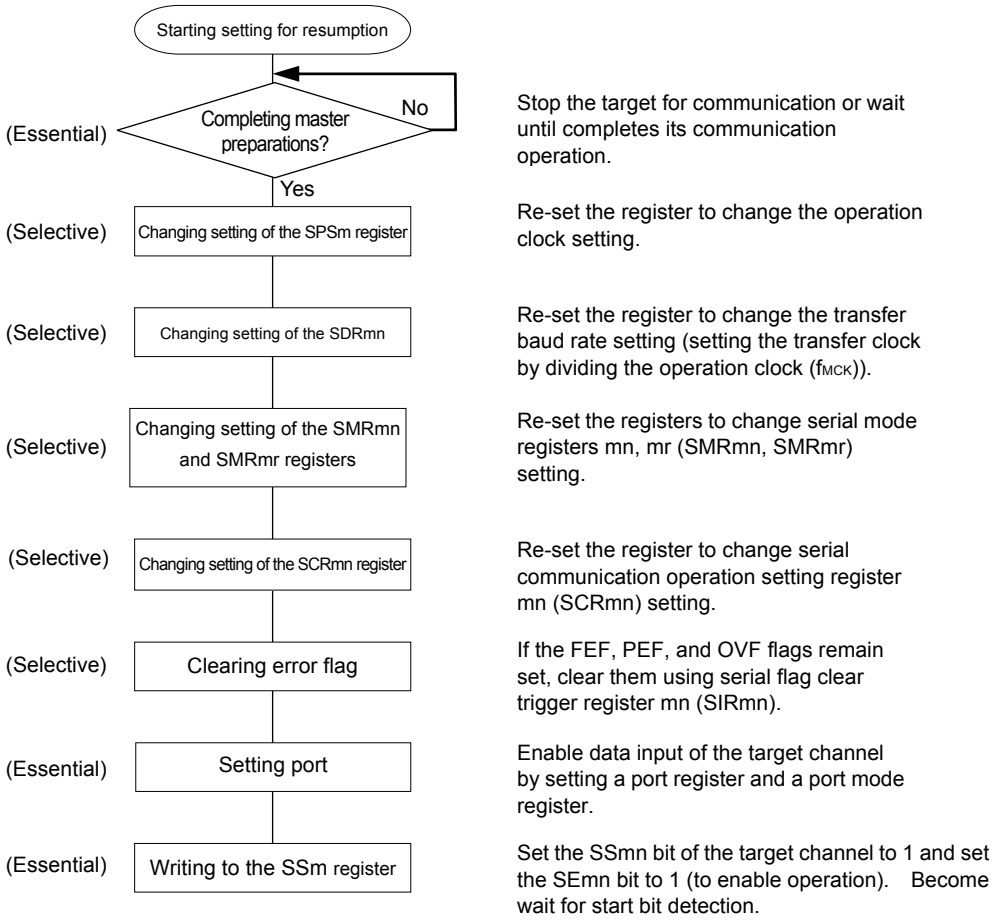

Caution After is set RXEmn bit to 1 of SCRmn register, set the SSmn = 1 from an interval of at least four clocks of f_{MCK}.

Remark If PER0 is rewritten while stopping the master transmission and the clock supply is stopped, wait until the transmission target (slave) stops or transmission finishes, and then perform initialization instead of restarting the transmission.

(3) Processing flow

Figure 13-87. Timing Chart of UART Reception

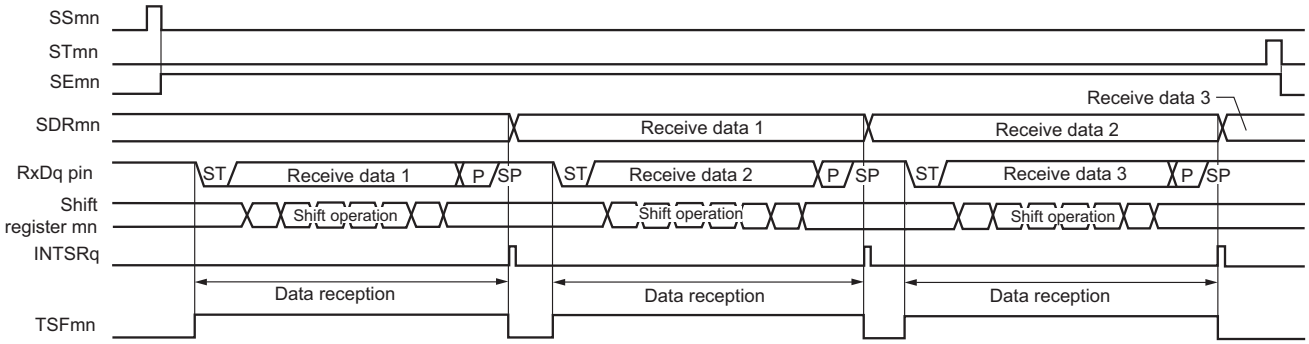

Remark m: Unit number (m = 0), n: Channel number (n = 1, 3), mn = 01, 03
r: Channel number (r = n – 1), q: UART number (q = 0, 1)

Figure 13-88. Flowchart of UART Reception

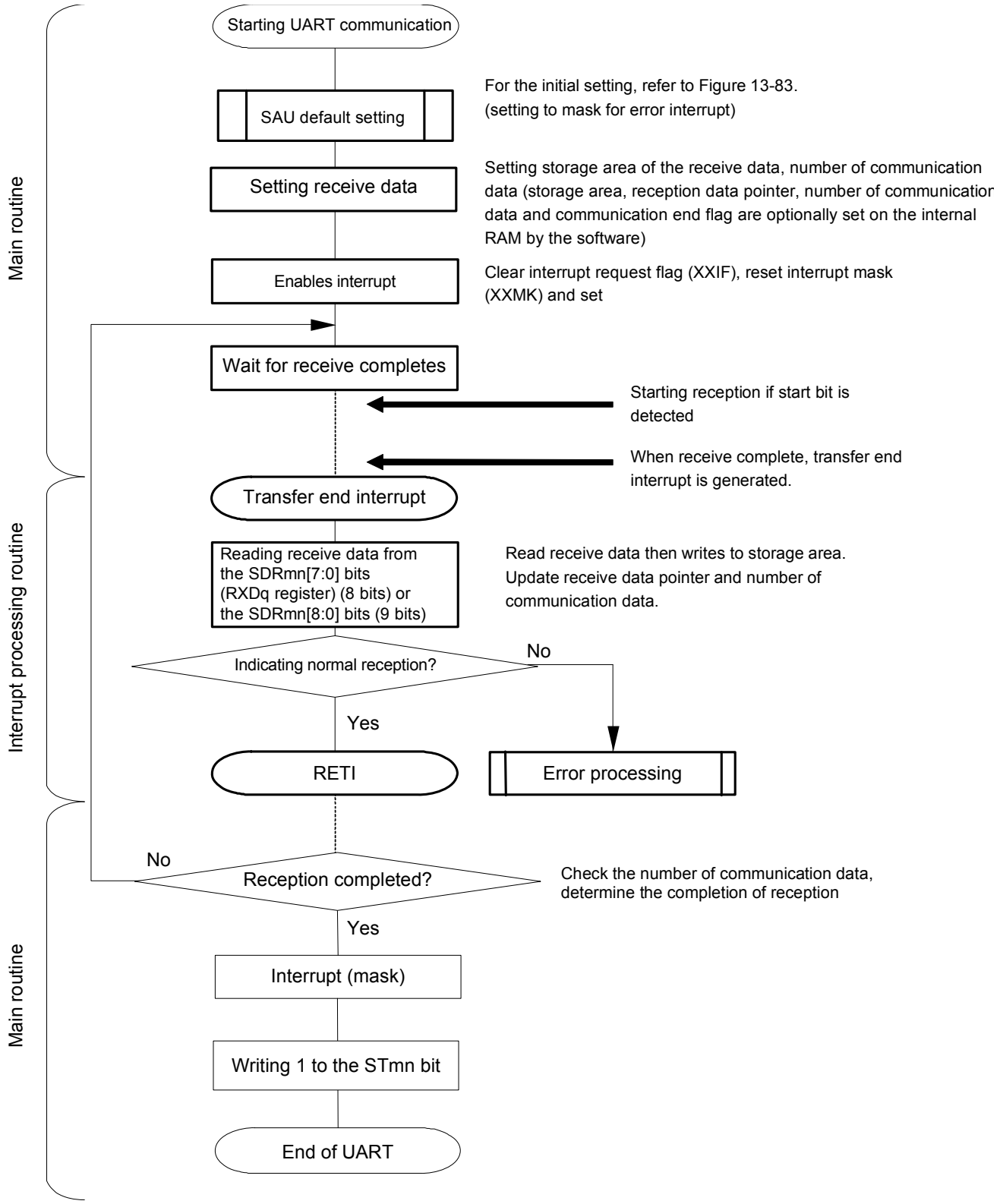

13.6.3 SNOOZE mode function

The SNOOZE mode makes the UART perform reception operations upon RxDq pin input detection while in the STOP mode. Normally the UART stops communication in the STOP mode. However, using the SNOOZE mode enables the UART to perform reception operations without CPU operation.

Only UART0 can be set to the SNOOZE mode.

When using UART0 in the SNOOZE mode, make the following settings before entering the STOP mode. (See **Figure 13-71** and **Figure 13-73 Flowchart of SNOOZE Mode Operation**.)

- In the SNOOZE mode, the baud rate setting for UART reception needs to be changed to a value different from that in normal operation. Set the SPSm register and bits 15 to 9 of the SDRmn register with reference to Table 13-3.
- Set the EOCmn and SSECmn bits. This is for enabling or stopping generation of an error interrupt (INTSRE0) when a communication error occurs.
- When using the SNOOZE mode function, set the SWCm bit of serial standby control register m (SSCm) to 1 just before switching to the STOP mode. After the initial setting has completed, set the SSm1 bit of serial channel start register m (SSm) to 1.
- A UARTq starts reception in SNOOZE mode on detecting input of the start bit on the RxDq pin following a transition of the CPU to the STOP mode.

Cautions 1. The SNOOZE mode can only be used when the high-speed on-chip oscillator clock (f_{IH}) is selected for f_{CLK}.

2. The transfer rate in the SNOOZE mode is only 4800 bps.

3. When SWCm = 1, UARTq can be used only when the reception operation is started in the STOP mode. When used simultaneously with another SNOOZE mode function or interrupt, if the reception operation is started in a state other than the STOP mode, such as those given below, data may not be received correctly and a framing error or parity error may be generated.

- **When after the SWCm bit has been set to 1, the reception operation is started before the STOP mode is entered**
- **When the reception operation is started while another function is in the SNOOZE mode**
- **When after returning from the STOP mode to normal operation due to an interrupt or other cause, the reception operation is started before the SWCm bit is returned to 0**

4. If a parity error, framing error, or overrun error occurs while the SSECm bit is set to 1, the PEFmn, FEFmn, or OVFmn flag is not set and an error interrupt (INTSREq) is not generated. Therefore, when the setting of SSECm = 1 is made, clear the PEFmn, FEFmn, or OVFmn flag before setting the SWC0 bit to 1 and read the value in bits 7 to 0 (RxDq register) of the SDRm1 register.

5. The CPU shifts from the STOP mode to the SNOOZE mode on detecting the valid edge of the RxDq signal. Note, however, that transfer through the UART channel may not start and the CPU may remain in the SNOOZE mode if an input pulse on the RxDq pin is too short to be detected as a start bit.

In such cases, data may not be received correctly, and this may lead to a framing error or parity error in the next UART transfer.

Table 13-3. Baud Rate Setting for UART Reception in SNOOZE Mode

High-speed On-chip Oscillator (f_{IH})	Baud Rate for UART Reception in SNOOZE Mode			
	Baud Rate of 4800 bps			
	Operation Clock (f_{MCK})	SDRmn[15:9]	Maximum Permissible Value	Minimum Permissible Value
32 MHz ± 1.0%[Note]	$f_{CLK}/2^5$	105	2.27%	-1.53%
24 MHz ± 1.0%[Note]	$f_{CLK}/2^5$	79	1.60%	-2.18%
16 MHz ± 1.0%[Note]	$f_{CLK}/2^4$	105	2.27%	-1.53%
12 MHz ± 1.0%[Note]	$f_{CLK}/2^4$	79	1.60%	-2.19%
8 MHz ± 1.0%[Note]	$f_{CLK}/2^3$	105	2.27%	-1.53%
6 MHz ± 1.0%[Note]	$f_{CLK}/2^3$	79	1.60%	-2.19%
4 MHz ± 1.0%[Note]	$f_{CLK}/2^2$	105	2.27%	-1.53%
3 MHz ± 1.0%[Note]	$f_{CLK}/2^2$	79	1.60%	-2.19%
2 MHz ± 1.0%[Note]	$f_{CLK}/21$	105	2.27%	-1.54%
1 MHz ± 1.0%[Note]	f_{CLK}	105	2.27%	-1.57%

Note When the accuracy of the clock frequency of the high-speed on-chip oscillator is ±1.5% or ±2.0%, the permissible range becomes smaller as shown below.

- In the case of f_{IH} ± 1.5%, perform (Maximum permissible value – 0.5%) and (Minimum permissible value + 0.5%) to the values in the above table.
- In the case of f_{IH} ± 2.5%, perform (Maximum permissible value – 1.5%) and (Minimum permissible value + 1.5%) to the values in the above table.

Remark The maximum permissible value and minimum permissible value are permissible values for the baud rate in UART reception. The baud rate on the transmitting side should be set to fall inside this range.

(1) SNOOZE mode operation (EOCm1 = 0, SSECm = 0/1)

Because of the setting of EOCm1 = 0, even though a communication error occurs, an error interrupt (INTSRE0) is not generated, regardless of the setting of the SSECm bit. A transfer end interrupt (INTSR0) will be generated.

Figure 13-89. Timing Chart of SNOOZE Mode Operation (EOCm1 = 0, SSECm = 0/1)

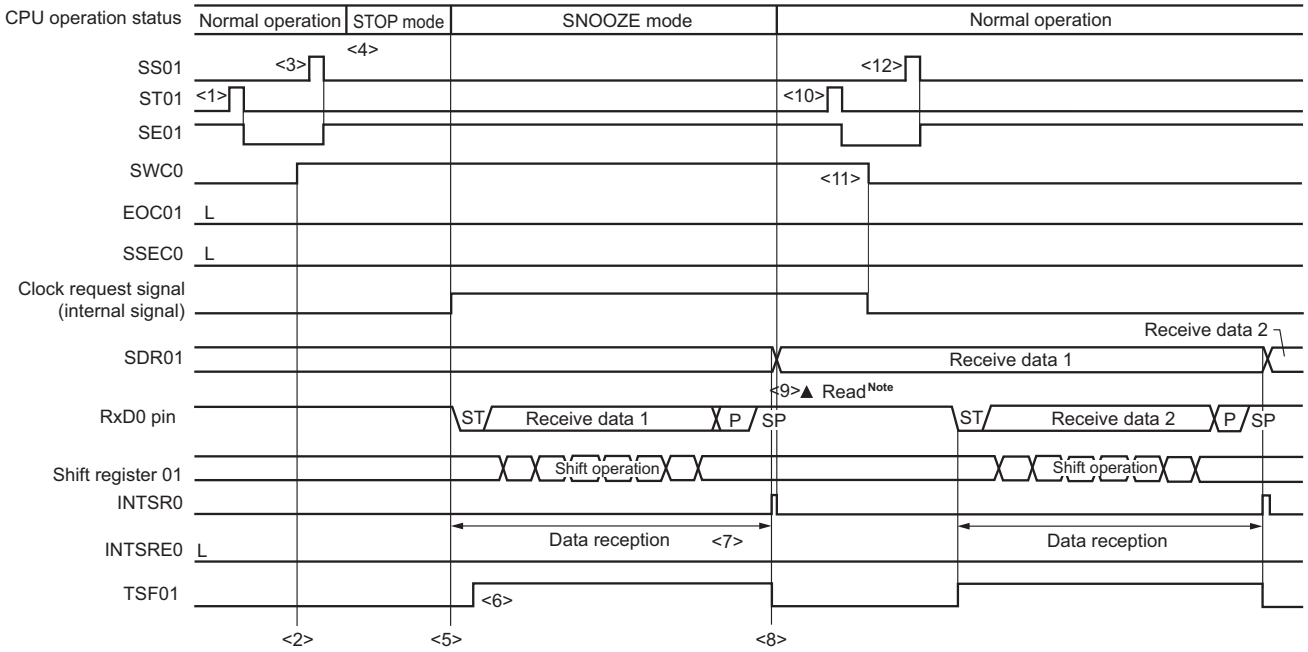

Note Read the received data when SWC0 = 1.

Caution Before switching to the SNOOZE mode or after reception operation in the SNOOZE mode finishes, set the STm1 bit to 1 (clear the SEm1 bit and stop the operation).
After the receive operation completes, also clear the SWCm bit to 0 (SNOOZE mode release).

Remarks 1. <1> to <12> in the figure correspond to <1> to <12> in **Figure 13-90 Flowchart of SNOOZE Mode Operation (EOCm1 = 0, SSECm = 0/1 or EOCm1 = 1, SSECm = 0)**.

2. m = 0; q = 0

(2) SNOOZE mode operation (EOCm1 = 1, SSECm = 0: Error interrupt (INTSREq) generation is enabled)

Because EOCm1 = 1 and SSECm = 0, an error interrupt (INTSREq) is generated when a communication error occurs.

Figure 13-90. Timing Chart of SNOOZE Mode Operation (EOCm1 = 1, SSECm = 0)

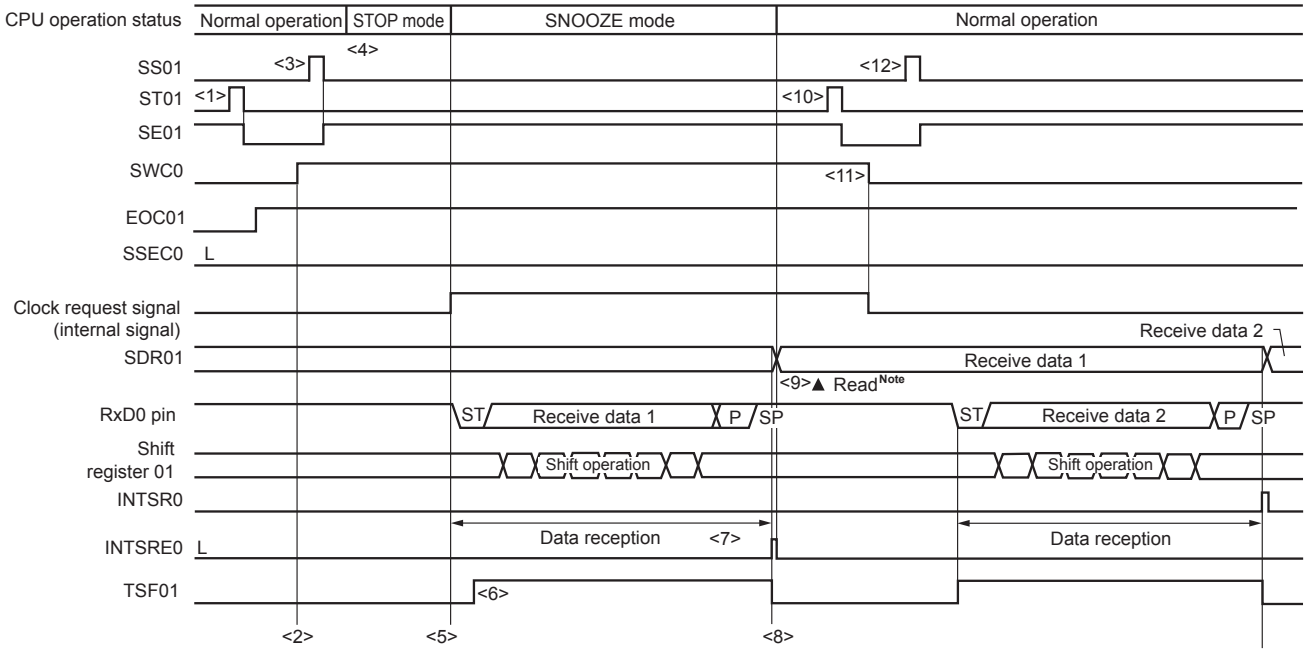

Note Read the received data when SWCm = 1.

Caution Before switching to the SNOOZE mode or after reception operation in the SNOOZE mode finishes, set the STm1 bit to 1 (clear the SEm1 bit, and stop the operation).
And after completion the receive operation, also clearing SWCm bit to 0 (SNOOZE mode release).

Remarks 1. <1> to <12> in the figure correspond to <1> to <12> in **Figure 13-90 Flowchart of SNOOZE Mode Operation (EOCm1 = 0, SSECm = 0/1 or EOCm1 = 1, SSECm = 0)**.

2. m = 0; q = 0

Figure 13-91. Flowchart of SNOOZE Mode Operation (EOCm1 = 0, SSECm = 0/1 or EOCm1 = 1, SSECm = 0)

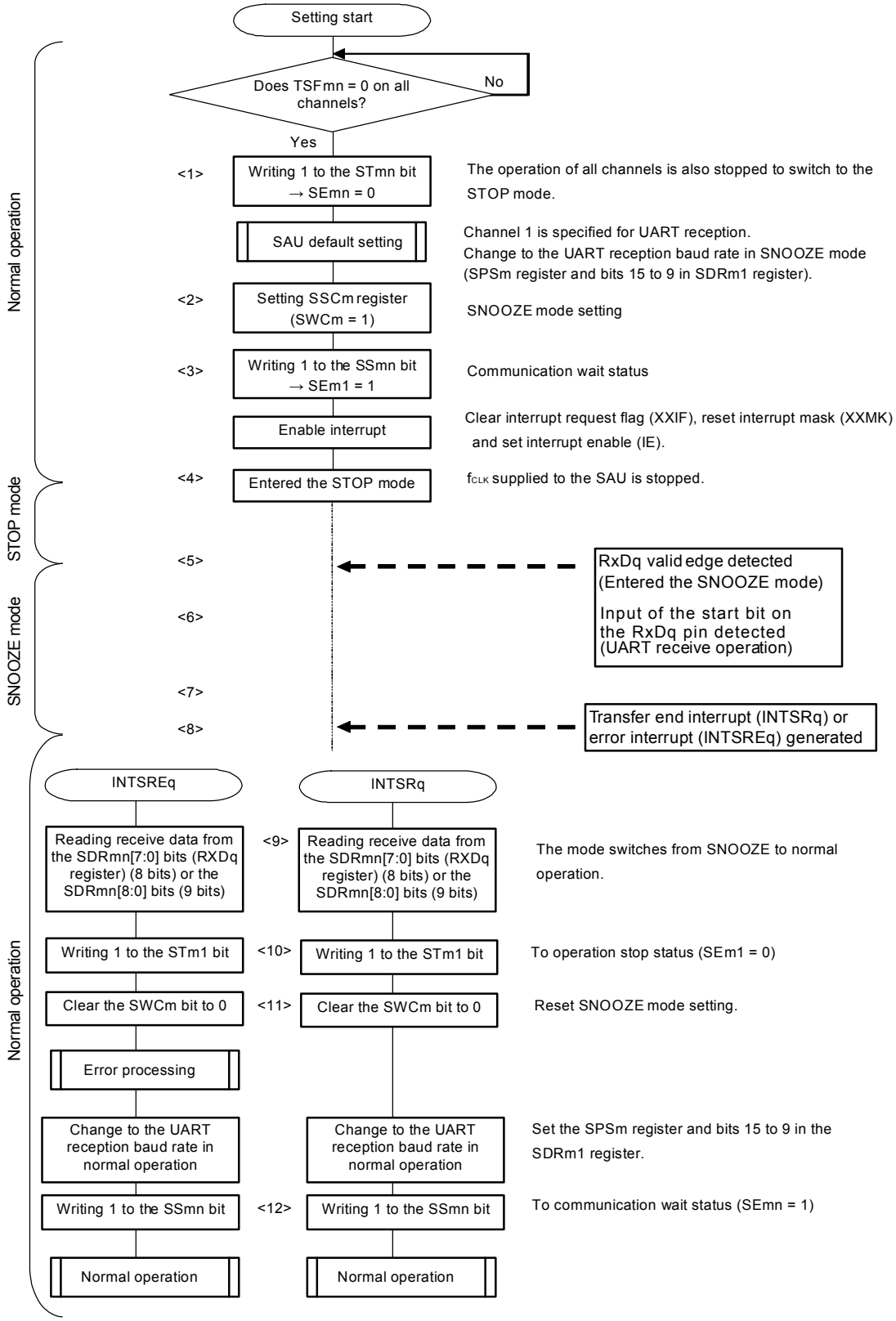

Remarks 1. <1> to <12> in the figure correspond to <1> to <12> in **Figure 13-89 Timing Chart of SNOOZE Mode Operation (EOCm1 = 0, SSECm = 0/1)** and **Figure 13-90 Timing Chart of SNOOZE Mode Operation (EOCm1 = 1, SSECm = 0)**.

2. m = 0; n = 1; q = 0

(3) SNOOZE mode operation (EOCm1 = 1, SSECm = 1: Error interrupt (INTSREq) generation is stopped)

Because EOCm1 = 1 and SSECm = 1, an error interrupt (INTSREq) is not generated when a communication error occurs.

Figure 13-92. Timing Chart of SNOOZE Mode Operation (EOCm1 = 1, SSECm = 1)

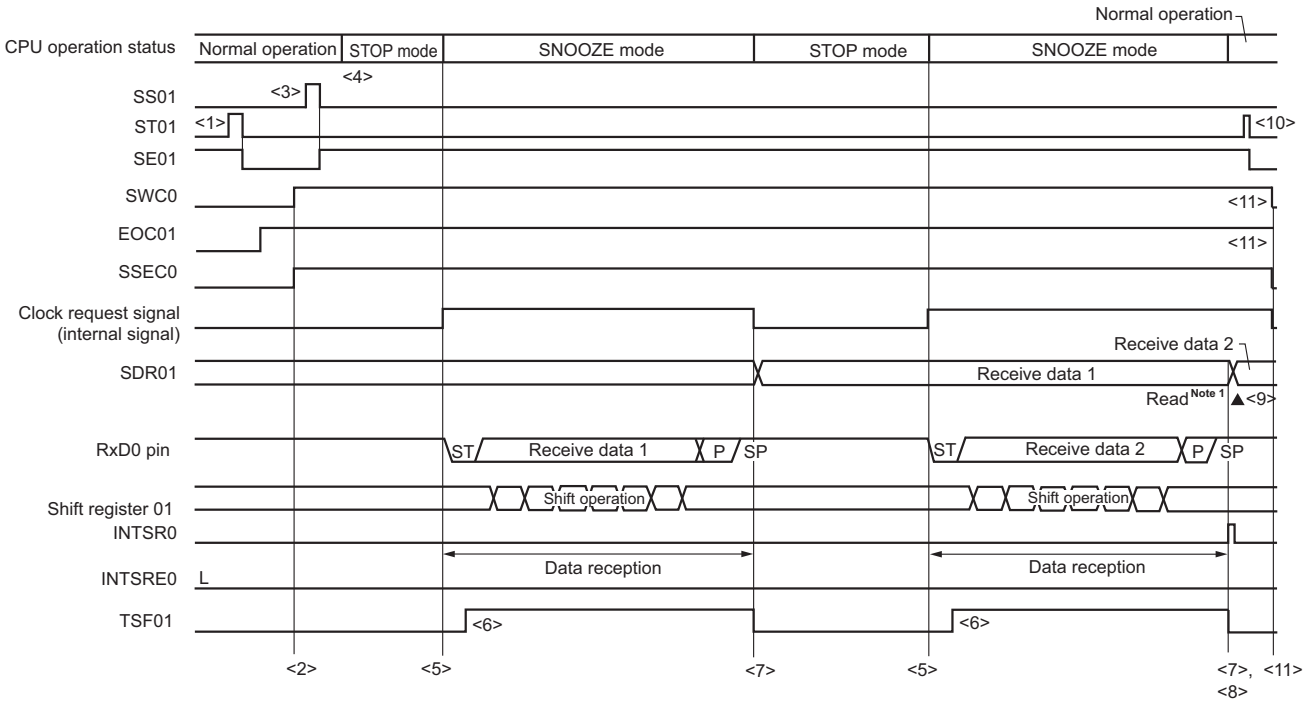

Note Read the received data when SWCm = 1.

Cautions 1. Before switching to the SNOOZE mode or after reception operation in the SNOOZE mode finishes, set the STm1 bit to 1 (clear the SEm1 bit and stop the operation).
After the receive operation completes, also clear the SWCm bit to 0 (SNOOZE mode release).

2. If a parity error, framing error, or overrun error occurs while the SSECm bit is set to 1, the PEFm1, FEFm1, or OVFm1 flag is not set and an error interrupt (INTSREq) is not generated. Therefore, when the setting of SSECm = 1 is made, clear the PEFm1, FEFm1, or OVFm1 flag before setting the SWCm bit to 1 and read the value in SDRm1[7:0] (RxDq register) (8 bits) or SDRm1[8:0] (9 bits).

Remarks 1. <1> to <11> in the figure correspond to <1> to <11> in **Figure 13-93 Flowchart of SNOOZE Mode Operation (EOCm1 = 1, SSECm = 1)**.

2. m = 0; q = 0

Figure 13-93. Flowchart of SNOOZE Mode Operation (EOCm1 = 1, SSECm = 1)

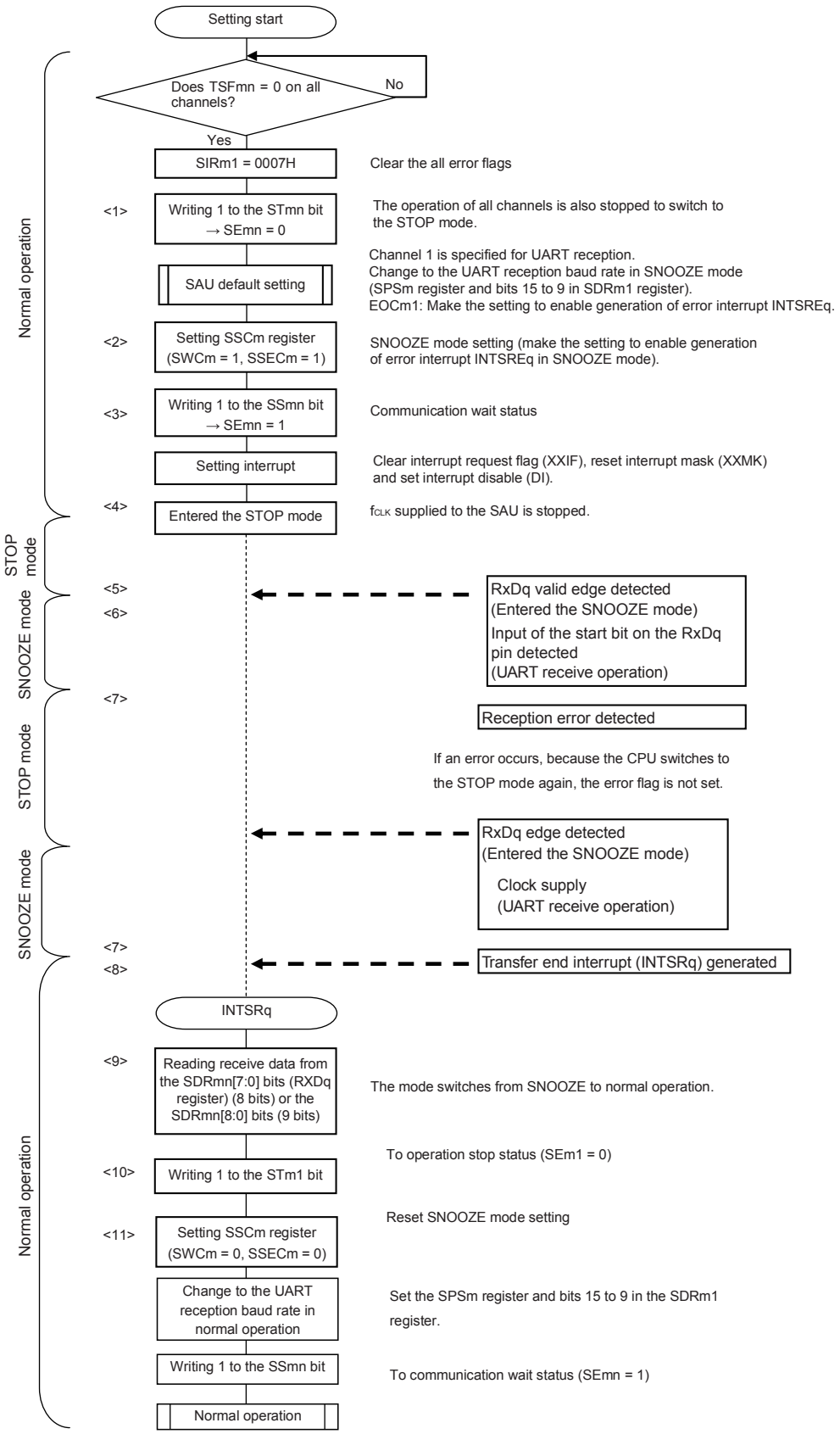

(**Caution** and **Remarks** are listed on the next page.)

Caution **If a parity error, framing error, or overrun error occurs while the SSECm bit is set to 1, the PEFm1, FEFm1, or OVFm1 flag is not set and an error interrupt (INTSREq) is not generated. Therefore, when the setting of SSECm = 1 is made, clear the PEFm1, FEFm1, or OVFm1 flag before setting the SWCm bit to 1 and read the value in SDRm1[7:0] (RxDq register) (8 bits) or SDRm1[8:0] (9 bits).**

Remarks 1. <1> to <11> in the figure correspond to <1> to <11> in **Figure 13-92 Timing Chart of SNOOZE Mode Operation (EOCm1 = 1, SSECm = 1)**.

2. m = 0; n = 1; q = 0

13.6.4 Calculating baud rate

(1) Baud rate calculation expression

The baud rate for UART (UART0 and UART1) communication can be calculated by the following expressions.

(Baud rate) = {Operation clock (f_{MCK}) frequency of target channel} ÷ (SDRmn[15:9] + 1) ÷ 2 [bps]

Caution Setting serial data register mn (SDRmn) SDRmn[15:9] = (0000000B, 0000001B) is prohibited.

Remarks 1. When UART is used, the value of SDRmn[15:9] is the value of bits 15 to 9 of the SDRmn register (0000010B to 1111111B) and therefore is 2 to 127.

2. m: Unit number (m = 0, 1), n: Channel number (n = 0 to 3), mn = 00 to 03, 10 to 13

The operation clock (f_{MCK}) is determined by serial clock select register m (SPSm) and bit 15 (CKSmn) of serial mode register mn (SMRmn).

Table 13-4. Selection of Operation Clock For UART

SMRmn Register	SPSm Register								Operation Clock (f_{MCK}) Note	
CKSmn	PRS m13	PRS m12	PRS m11	PRS m10	PRS m03	PRS m02	PRS m01	PRS m00		f_{CLK} = 32 MHz
0	X	X	X	X	0	0	0	0	f_{CLK}	32 MHz
	X	X	X	X	0	0	0	1	$f_{CLK}/2$	16 MHz
	X	X	X	X	0	0	1	0	$f_{CLK}/2^2$	8 MHz
	X	X	X	X	0	0	1	1	$f_{CLK}/2^3$	4 MHz
	X	X	X	X	0	1	0	0	$f_{CLK}/2^4$	2 MHz
	X	X	X	X	0	1	0	1	$f_{CLK}/2^5$	1 MHz
	X	X	X	X	0	1	1	0	$f_{CLK}/2^6$	500 kHz
	X	X	X	X	0	1	1	1	$f_{CLK}/2^7$	250 kHz
	X	X	X	X	1	0	0	0	$f_{CLK}/2^8$	125 kHz
	X	X	X	X	1	0	0	1	$f_{CLK}/2^9$	62.5 kHz
	X	X	X	X	1	0	1	0	$f_{CLK}/2^{10}$	31.25 kHz
	X	X	X	X	1	0	1	1	$f_{CLK}/2^{11}$	15.63 kHz
	X	X	X	X	1	1	0	0	$f_{CLK}/2^{12}$	7.81 kHz
	X	X	X	X	1	1	0	1	$f_{CLK}/2^{13}$	3.91 kHz
	X	X	X	X	1	1	1	0	$f_{CLK}/2^{14}$	1.95 kHz
	X	X	X	X	1	1	1	1	$f_{CLK}/2^{15}$	977 Hz
1	0	0	0	0	X	X	X	X	f_{CLK}	32 MHz
	0	0	0	1	X	X	X	X	$f_{CLK}/2$	16 MHz
	0	0	1	0	X	X	X	X	$f_{CLK}/2^2$	8 MHz
	0	0	1	1	X	X	X	X	$f_{CLK}/2^3$	4 MHz
	0	1	0	0	X	X	X	X	$f_{CLK}/2^4$	2 MHz
	0	1	0	1	X	X	X	X	$f_{CLK}/2^5$	1 MHz
	0	1	1	0	X	X	X	X	$f_{CLK}/2^6$	500 kHz
	0	1	1	1	X	X	X	X	$f_{CLK}/2^7$	250 kHz
	1	0	0	0	X	X	X	X	$f_{CLK}/2^8$	125 kHz
	1	0	0	1	X	X	X	X	$f_{CLK}/2^9$	62.5 kHz
	1	0	1	0	X	X	X	X	$f_{CLK}/2^{10}$	31.25 kHz
	1	0	1	1	X	X	X	X	$f_{CLK}/2^{11}$	15.63 kHz
	X	X	X	X	1	1	0	0	$f_{CLK}/2^{12}$	7.81 kHz
	X	X	X	X	1	1	0	1	$f_{CLK}/2^{13}$	3.91 kHz
	X	X	X	X	1	1	1	0	$f_{CLK}/2^{14}$	1.95 kHz
	X	X	X	X	1	1	1	1	$f_{CLK}/2^{15}$	977 Hz
Other than above									Setting prohibited	

Note When changing the clock selected for f_{CLK} (by changing the system clock control register (CKC) value), do so after having stopped (serial channel stop register m (STm) = 000FH) the operation of the serial array unit (SAU).

Remarks 1. X: Don't care

2. m: Unit number (m = 0), n: Channel number (n = 0 to 3), mn = 00 to 03

(2) Baud rate error during transmission

The baud rate error of UART (UART0 and UART1) communication during transmission can be calculated by the following expression. Make sure that the baud rate at the transmission side is within the permissible baud rate range at the reception side.

(Baud rate error) = (Calculated baud rate value) ÷ (Target baud rate) × 100 – 100 [%]

Here is an example of setting a UART baud rate at f_{CLK} = 32 MHz.

UART Baud Rate (Target Baud Rate)	f_{CLK} = 32 MHz			
	Operation Clock (f_{MCK})	SDRmn[15:9]	Calculated Baud Rate	Error from Target Baud Rate
300 bps	$f_{CLK}/2^9$	103	300.48 bps	+0.16 %
600 bps	$f_{CLK}/2^8$	103	600.96 bps	+0.16 %
1200 bps	$f_{CLK}/2^7$	103	1201.92 bps	+0.16 %
2400 bps	$f_{CLK}/2^6$	103	2403.85 bps	+0.16 %
4800 bps	$f_{CLK}/2^5$	103	4807.69 bps	+0.16 %
9600 bps	$f_{CLK}/2^4$	103	9615.38 bps	+0.16 %
19200 bps	$f_{CLK}/2^3$	103	19230.8 bps	+0.16 %
31250 bps	$f_{CLK}/2^3$	63	31250.0 bps	±0.0 %
38400 bps	$f_{CLK}/2^2$	103	38461.5 bps	+0.16 %
76800 bps	$f_{CLK}/2$	103	76923.1 bps	+0.16 %
153600 bps	f_{CLK}	103	153846 bps	+0.16 %
312500 bps	f_{CLK}	50	313725.5 bps	+0.39 %

Remark m: Unit number (m = 0), n: Channel number (n = 0, 2), mn = 00, 02

(3) Permissible baud rate range for reception

The permissible baud rate range for reception during UART (UART0 and UART1) communication can be calculated by the following expression. Make sure that the baud rate at the transmission side is within the permissible baud rate range at the reception side.

$$\text{(Maximum receivable baud rate)} = \frac{2 \times k \times Nfr}{2 \times k \times Nfr - k + 2} \times Brate$$

$$\text{(Minimum receivable baud rate)} = \frac{2 \times k \times (Nfr - 1)}{2 \times k \times Nfr - k - 2} \times Brate$$

Brate: Calculated baud rate value at the reception side (See **13.6.4 (1) Baud rate calculation expression**.)

k: SDRmn[15:9] + 1

Nfr: 1 data frame length [bits]

= (Start bit) + (Data length) + (Parity bit) + (Stop bit)

Remark m: Unit number (m = 0), n: Channel number (n = 1, 3), mn = 01, 03

Figure 13-94. Permissible Baud Rate Range for Reception (1 Data Frame Length = 11 Bits)

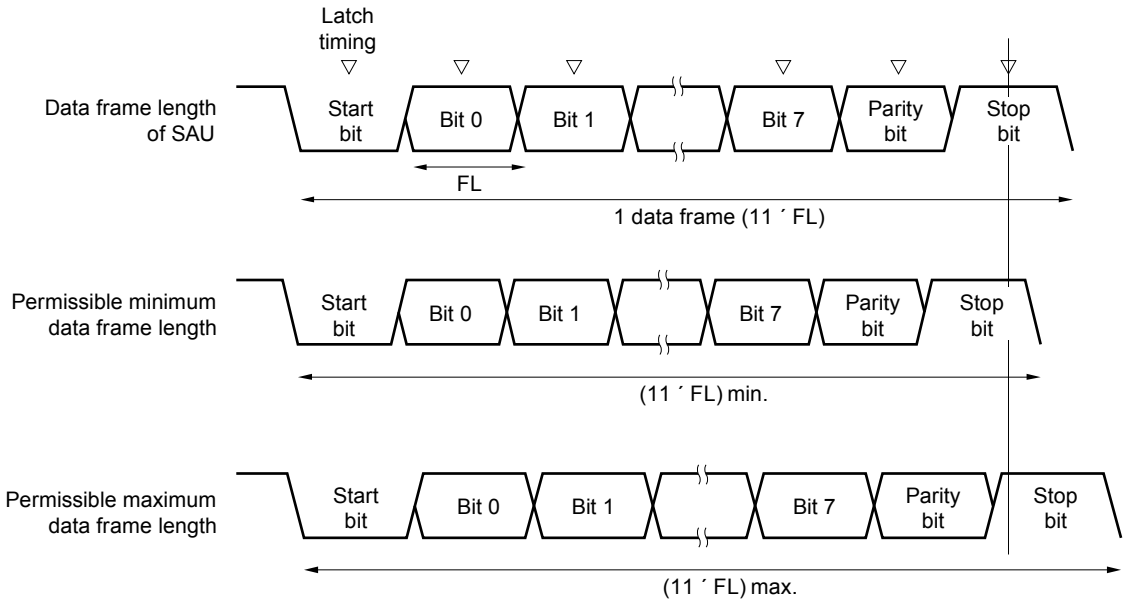

As shown in Figure 13-94, the timing of latching receive data is determined by the division ratio set by bits 15 to 9 of serial data register mn (SDRmn) after the start bit is detected. If the last data (stop bit) is received before this latch timing, the data can be correctly received.

13.6.5 Procedure for processing errors that occurred during UART (UART0 and UART1) communication

The procedure for processing errors that occurred during UART (UART0 and UART1) communication is described in Figures 13-94 and 13-95.

Figure 13-95. Processing Procedure in Case of Parity Error or Overrun Error

Software Manipulation	Hardware Status	Remark
Reads serial data register mn (SDRmn). →	The BFFmn bit of the SSRmn register is set to 0 and channel n is enabled to receive data.	This is to prevent an overrun error if the next reception is completed during error processing.
Reads serial status register mn (SSRmn).		Error type is identified and the read value is used to clear error flag.
Writes 1 to serial flag clear trigger register mn (SIRmn). →	Error flag is cleared.	Error can be cleared only during reading, by writing the value read from the SSRmn register to the SIRmn register without modification.

Figure 13-96. Processing Procedure in Case of Framing Error

Software Manipulation	Hardware Status	Remark
Reads serial data register mn (SDRmn). →	The BFFmn bit of the SSRmn register is set to 0 and channel n is enabled to receive data.	This is to prevent an overrun error if the next reception is completed during error processing.
Reads serial status register mn (SSRmn).		Error type is identified and the read value is used to clear error flag.
Writes serial flag clear trigger register mn (SIRmn). →	Error flag is cleared.	Error can be cleared only during reading, by writing the value read from the SSRmn register to the SIRmn register without modification.
Sets the STmn bit of serial channel stop register m (STm) to 1. →	The SEmn bit of serial channel enable status register m (SEm) is set to 0 and channel n stops operating.	
Synchronization with other party of communication		Synchronization with the other party of communication is re-established and communication is resumed because it is considered that a framing error has occurred because the start bit has been shifted.
Sets the SSmn bit of serial channel start register m (SSm) to 1. →	The SEmn bit of serial channel enable status register m (SEm) is set to 1 and channel n is enabled to operate.	

Remark m: Unit number (m = 0), n: Channel number (n = 0 to 3), mn = 00 to 03

13.7 Operation of Simplified I^{2}C (IIC00, IIC20) Communication

This is a clocked communication function to communicate with two or more devices by using two lines: serial clock (SCL) and serial data (SDA). This communication function is designed to execute single communication with devices such as EEPROM, flash memory, and A/D converter, and therefore, can be used only by the master.

Operate the control registers by software for setting the start and stop conditions while observing the specifications of the I^{2}C bus line

[Data transmission/reception]

- Master transmission, master reception (only master function with a single master)
- ACK output function[Note] and ACK detection function
- Data length of 8 bits
  (When an address is transmitted, the address is specified by the higher 7 bits, and the least significant bit is used for R/W control.)
- Generation of start condition and stop condition for software

[Interrupt function]

- Transfer end interrupt

[Error detection flag]

- Overrun error
- ACK error

* [Functions not supported by simplified I^{2}C]

- Slave transmission, slave reception
- Multi-master function (arbitration loss detection function)
- Wait detection function

Note When receiving the last data, ACK will not be output if 0 is written to the SOEmn (SOEm register) bit and serial communication data output is stopped. See the processing flow in **13.7.3 (2)** for details.

Remark m: Unit number (m = 0, 1), n: Channel number (n = 0), mn = 00, 10

The channel supporting simplified I^2C (IIC00, IIC20) is channel 0 of SAU0 and SAU1.

Unit	Channel	Used as CSI	Used as UART	Used as Simplified I^2C
0	0	CSI00	UART0	IIC00
	1	–		–
	2		UART1	–
	3	–		–
1	0	CSI20	–	IIC20
	1	CSI21		–

Simplified I^2C (IIC00, IIC20) performs the following four types of communication operations.

- Address field transmission (See **13.7.1**.)
- Data transmission (See **13.7.2**.)
- Data reception (See **13.7.3**.)
- Stop condition generation (See **13.7.4**.)

Note It is dedicated for communication between the MCU and RF transceiver.

13.7.1 Address field transmission

Address field transmission is a transmission operation that first executes in I^2C communication to identify the target for transfer (slave). After a start condition is generated, an address (7 bits) and a transfer direction (1 bit) are transmitted in one frame.

Simplified I^2C	IIC00	IIC20
Target channel	Channel 0 of SAU0	Channel 0 of SAU1
Pins used	SCL00, SDA00[Note 1]	SCL20, SDA20[Note 1]
Interrupt	INTIIC00	INTIIC20
	Transfer end interrupt only (Setting the buffer empty interrupt is prohibited.)	
Error detection flag	ACK error detection flag (PEFmn)	
Transfer data length	8 bits (transmitted with specifying the higher 7 bits as address and the least significant bit as R/W control)	
Transfer rate[Note 2]	Max. $f_{MCK}/4$ [Hz] (SDRmn[15:9] = 1 or more) f_{MCK}: Operation clock frequency of target channel However, the following condition must be satisfied in each mode of I^2C. ● Max. 1 MHz (fast mode plus) ● Max. 400 kHz (fast mode) ● Max. 100 kHz (standard mode)	
Data level	Non-reversed output (default: high level)	
Parity bit	No parity bit	
Stop bit	Appending 1 bit (for ACK transmission/reception timing)	
Data direction	MSB first	

Notes 1. To perform communication via simplified I^2C, set the N-ch open-drain output (V_{DD} tolerance) mode (POM11, POM14 = 1) with the port output mode register (POM0, POM1). For details, see **5.3 Registers Controlling Port Function** and **5.5 Register Settings When Using Alternate Function**.
When IIC00, IIC20 is communicating with an external device with a different potential, set the N-ch open-drain output (V_{DD} tolerance) mode (POMxx = 1) also for the clock input/output pins (SCL00, SCL20).
For details, see **5.4.5 Handling different potential (1.8 V, 2.5 V) by using I/O buffers**.

2. Use this operation within a range that satisfies the conditions above and the peripheral functions characteristics in the electrical specifications (see **CHAPTER 30 ELECTRICAL SPECIFICATIONS**).

Remark m: Unit number (m = 0, 1), n: Channel number (n = 0), mn = 00, 10

(1) Register setting

Figure 13-97. Example of Contents of Registers for Address Field Transmission of Simplified I²C (IIC00, IIC20)

(a) Serial mode register mn (SMRmn)

	15	14	13	12	11	10	9	8	7	6	5	4	3	2	1	0
SMRmn	CKSmn 0/1	CCSmn 0	0	0	0	0	0	STSmn Note 1 0	0	SISmn0 Note 1 0	1	0	0	MDmn2 1	MDmn1 0	MDmn0 0

Operation clock (f_{MCK}) of channel n
0: Prescaler output clock CKm0 set by the SPSm register
1: Prescaler output clock CKm1 set by the SPSm register

Operation mode of channel n
0: Transfer end interrupt

(b) Serial communication operation setting register mn (SCRmn)

	15	14	13	12	11	10	9	8	7	6	5	4	3	2	1	0
SCRmn	TXEmn 1	RXEmn 0	DAPmn 0	CKPmn 0	0	EOCmn 0	PTCmn1 0	PTCmn0 0	DIRmn 0	0	SLCmn1 0 Note 2	SLCmn0 1	0	1	DLSmn1 1 Note 3	DLSmn0 1

Setting of parity bit
00B: No parity

Setting of stop bit
01B: Appending 1 bit (ACK)

(c) Serial data register mn (SDRmn) (lower 8 bits: SIOr)

	15	14	13	12	11	10	9	8	7	6	5	4	3	2	1	0
SDRmn	Baud rate setting							0	Transmit data setting (address + R/W)							

SIOr

(d) Serial output register m (SOm)

	15	14	13	12	11	10	9	8	7	6	5	4	3	2	1	0
SOm	0	0	0	0	CKOm3 0/1	CKOm2 0/1	CKOm1 0/1	CKOm0 0/1	0	0	0	0	SOm3 0/1	SOm2 0/1	SOm1 0/1	SOm0 0/1

Start condition is generated by manipulating the SOmn bit.

(e) Serial output enable register m (SOEm)

	15	14	13	12	11	10	9	8	7	6	5	4	3	2	1	0
SOEm	0	0	0	0	0	0	0	0	0	0	0	0	SOEm3 0/1	SOEm2 0/1	SOEm1 0/1	SOEm0 0/1

SOEmn = 0 until the start condition is generated, and SOEmn = 1 after generation.

(f) Serial channel start register m (SSm) … Sets only the bits of the target channel to 1.

	15	14	13	12	11	10	9	8	7	6	5	4	3	2	1	0
SSm	0	0	0	0	0	0	0	0	0	0	0	0	SSm3 0/1	SSm2 0/1	SSm1 0/1	SSm0 0/1

SSmn = 0 until the start condition is generated, and SSmn = 1 after generation.

Notes 1. Only provided for the SMR00, SMR03 and SMR11registers.
2. Only provided for the SMR00, SMR02 and SCR10registers.
3. Only provided for the SCR00, SCR01, SCR10 and SCR11 registers. This bit is fixed to 1 for the other registers.

Remarks 1. m: Unit number (m = 0, 1), n: Channel number (n = 0), r: IIC number (r = 00, 20), mn = 00, 10

2. ☐: Setting is fixed in the IIC mode, ■: Setting disabled (set to the initial value)

×: Bit that cannot be used in this mode (set to the initial value when not used in any mode)

0/1: Set to 0 or 1 depending on the usage of the user

(2) Operation procedure

Figure 13-98. Initial Setting Procedure for Simplified I^2C

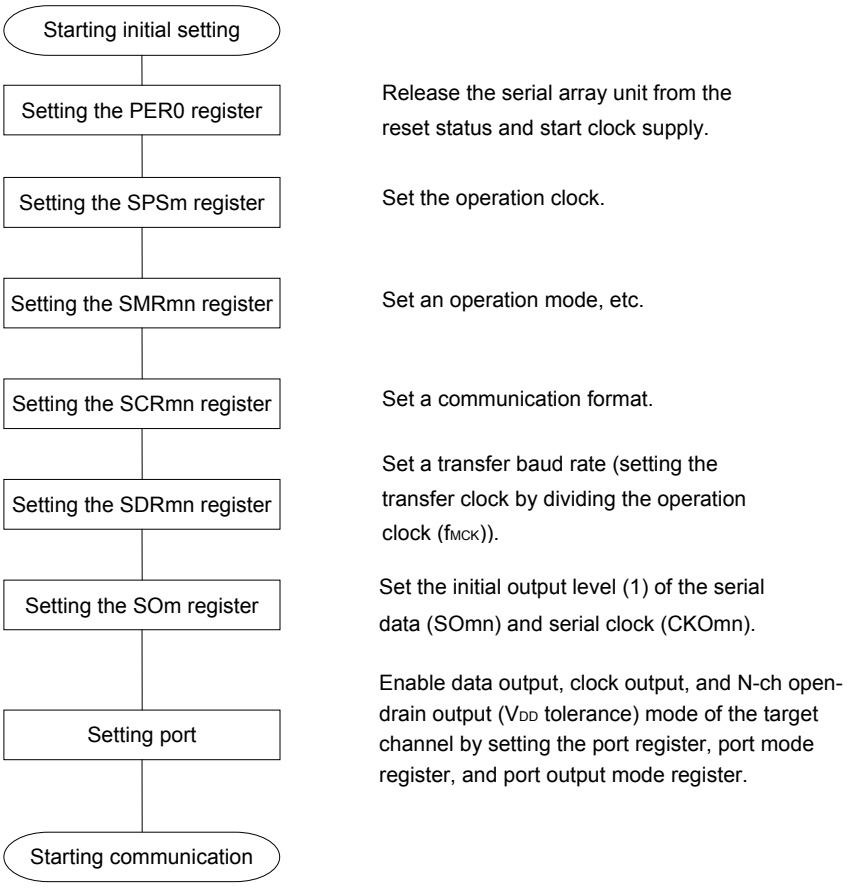

(3) Processing flow

Figure 13-99. Timing Chart of Address Field Transmission

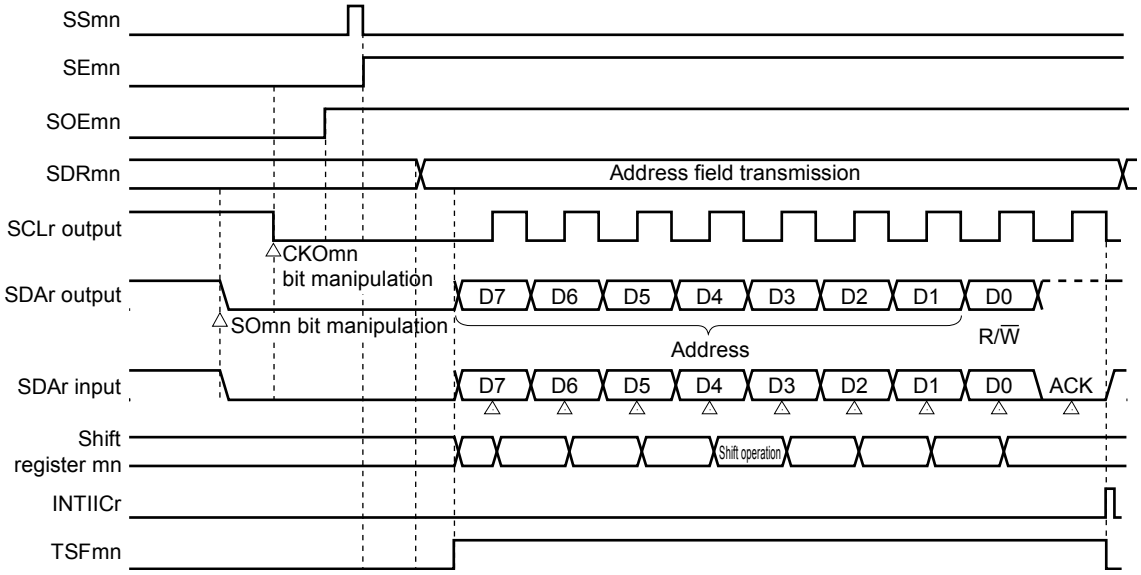

Remark m: Unit number (m = 0, 1), n: Channel number (n = 0), r: IIC number (r = 00, 20), mn = 00, 10

Figure 13-100. Flowchart of Simplified I²C Address Field Transmission

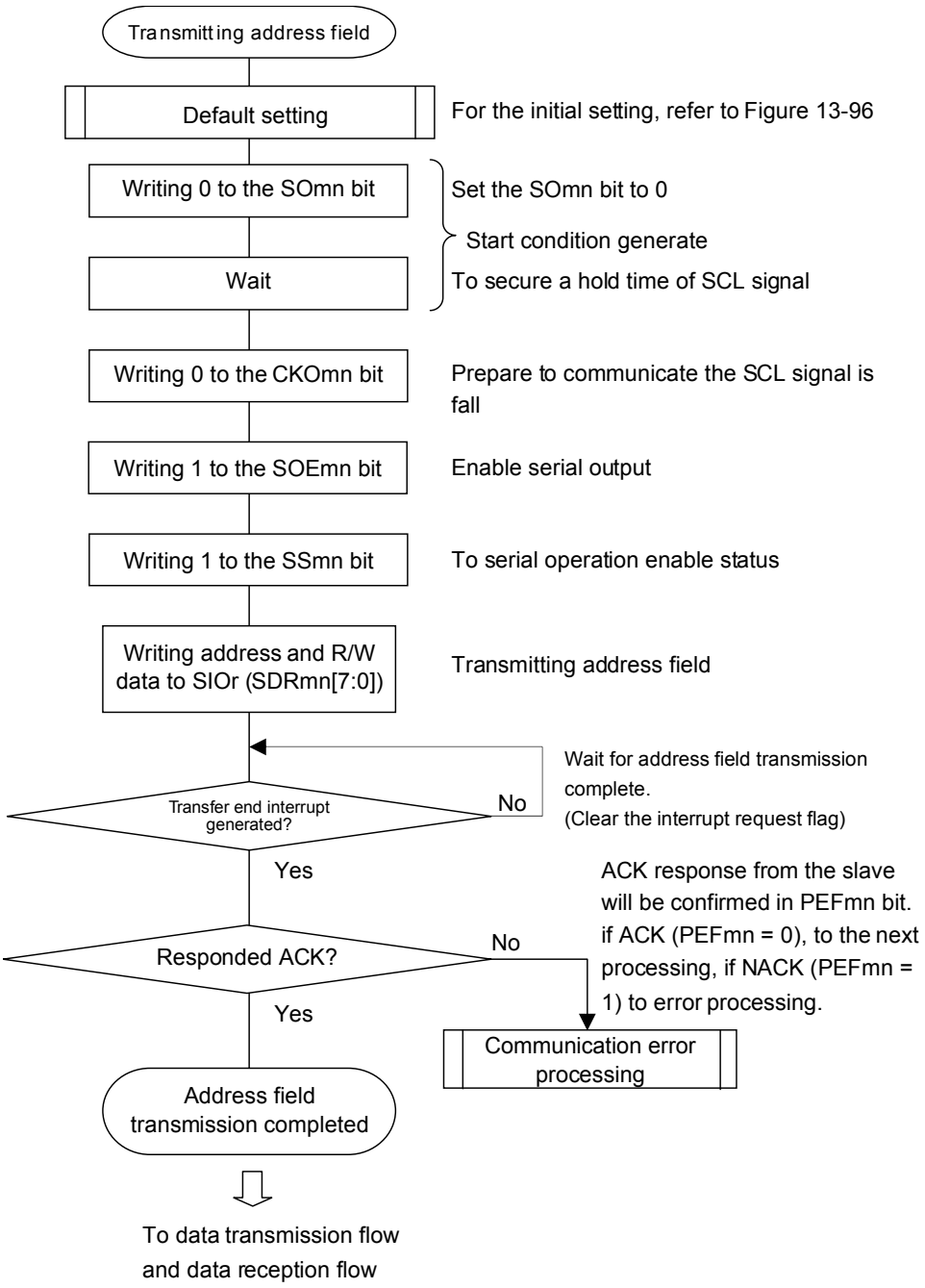

13.7.2 Data transmission

Data transmission is an operation to transmit data to the target for transfer (slave) after transmission of an address field. After all data are transmitted to the slave, a stop condition is generated and the bus is released.

Simplified I^2C	IIC00	IIC20
Target channel	Channel 0 of SAU0	Channel 0 of SAU1
Pins used	SCL00, SDA00[Note 1]	SCL20, SDA20[Note 1]
Interrupt	INTIIC00	INTIIC20
	Transfer end interrupt only (Setting the buffer empty interrupt is prohibited.)	
Error detection flag	ACK error flag (PEFmn)	
Transfer data length	8 bits	
Transfer rate[Note 2]	Max. $f_{MCK}/4$ [Hz] (SDRmn[15:9] = 1 or more) f_{MCK}: Operation clock frequency of target channel However, the following condition must be satisfied in each mode of I^2C. ● Max. 1 MHz (fast mode plus) ● Max. 400 kHz (fast mode) ● Max. 100 kHz (standard mode)	
Data level	Non-reversed output (default: high level)	
Parity bit	No parity bit	
Stop bit	Appending 1 bit (for ACK reception timing)	
Data direction	MSB first	

Notes 1. To perform communication via simplified I^2C, set the N-ch open-drain output (V_{DD} tolerance) mode (POM11, POM14 = 1) with the port output mode register (POM0, POM1). For details, see **5.3 Registers Controlling Port Function** and **5.5 Register Settings When Using Alternate Function**.
When IIC00, IIC20 is communicating with an external device with a different potential, set the N-ch open-drain output (V_{DD} tolerance) mode (POMxx = 1) also for the clock input/output pins (SCL00, SCL20).
For details, see **5.4.5 Handling different potential (1.8 V, 2.5 V) by using I/O buffers**.

2. Use this operation within a range that satisfies the conditions above and the peripheral functions characteristics in the electrical specifications (see **CHAPTER 30 ELECTRICAL SPECIFICATIONS**).

Remark m: Unit number (m = 0, 1), n: Channel number (n = 0), mn = 00, 10

(1) Register setting

Figure 13-101. Example of Contents of Registers for Data Transmission of Simplified I²C (IIC00, IIC20) (1/2)

(a) Serial mode register mn (SMRmn) … Do not manipulate this register during data transmission/reception.

	15	14	13	12	11	10	9	8	7	6	5	4	3	2	1	0
SMRmn	CKSmn 0/1	CCSmn 0	0	0	0	0	0	STSmn 0 Note 1	0	SISmn0 0 Note 1	1	0	0	MDmn2 1	MDmn1 0	MDmn0 0

(b) Serial communication operation setting register mn (SCRmn) … Do not manipulate the bits of this register, except the TXEmn and RXEmn bits, during data transmission/reception.

	15	14	13	12	11	10	9	8	7	6	5	4	3	2	1	0
SCRmn	TXEmn 1	RXEmn 0	DAPmn 0	CKPmn 0	0	EOCmn 0	PTCmn1 0	PTCmn0 0	DIRmn 0	0	SLCmn1 0 Note 2	SLCmn0 1	0	1	DLSmn1 1 Note 3	DLSmn0 1

(c) Serial data register mn (SDRmn) (lower 8 bits: SIOr) … During data transmission/reception, valid only lower 8-bits (SIOr)

	15	14	13	12	11	10	9	8	7	6	5	4	3	2	1	0
SDRmn	Baud rate setting Note 4							0	Transmit data setting							

SIOr

(d) Serial output register m (SOm) … Do not manipulate this register during data transmission/reception.

	15	14	13	12	11	10	9	8	7	6	5	4	3	2	1	0
SOm	0	0	0	0	CKOm3 0/1 Note5	CKOm2 0/1 Note5	CKOm1 0/1 Note5	CKOm0 0/1 Note5	0	0	0	0	SOm3 0/1 Note5	SOm2 0/1 Note5	SOm1 0/1 Note5	SOm0 0/1 Note5

(e) Serial output enable register m (SOEm) … Do not manipulate this register during data transmission/reception.

	15	14	13	12	11	10	9	8	7	6	5	4	3	2	1	0
SOEm	0	0	0	0	0	0	0	0	0	0	0	0	SOEm3 1	SOEm2 1	SOEm1 1	SOEm0 1

Notes 1. Only provided for the SMR01, SMR03 and SMR11registers.
2. Only provided for the SCR00, SCR02 and SCR10 registers.
3. Only provided for the SCR00, SCR11, SCR10 and SCR11 registers.
4. Because the setting is completed by address field transmission, setting is not required.
5. The value varies depending on the communication data during communication operation.

Remarks 1. m: Unit number (m = 0, 1), n: Channel number (n = 0), r: IIC number (r = 00, 20), mn = 00, 10
2. □: Setting is fixed in the IIC mode, ■: Setting disabled (set to the initial value)
×: Bit that cannot be used in this mode (set to the initial value when not used in any mode)
0/1: Set to 0 or 1 depending on the usage of the user

Figure 13-101. Example of Contents of Registers for Data Transmission of Simplified I²C (IIC00, IIC20) (2/2)

(f) Serial channel start register m (SSm) … Do not manipulate this register during data transmission/reception.

	15	14	13	12	11	10	9	8	7	6	5	4	3	2	1	0
SSm	0	0	0	0	0	0	0	0	0	0	0	0	SSm3 0/1	SSm2 0/1	SSm1 0/1	SSm0 0/1

Remarks 1. m: Unit number (m = 0, 1), n: Channel number (n = 0), r: IIC number (r = 00, 20), mn = 00, 10

2. ▒ : Setting disabled (set to the initial value)

×: Bit that cannot be used in this mode (set to the initial value when not used in any mode)

0/1: Set to 0 or 1 depending on the usage of the user

(2) Processing flow

Figure 13-102. Timing Chart of Data Transmission

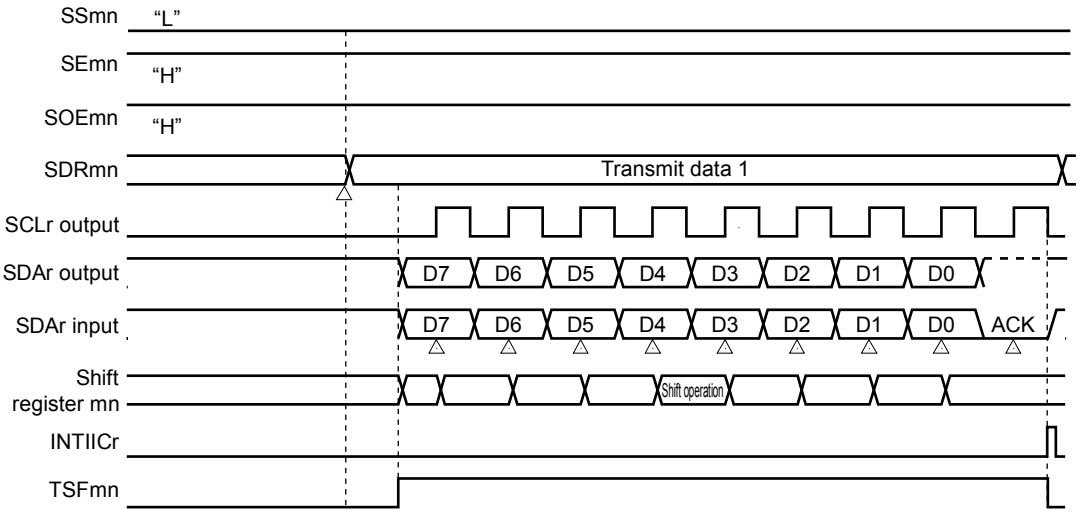

Figure 13-103. Flowchart of Simplified I²C Data Transmission

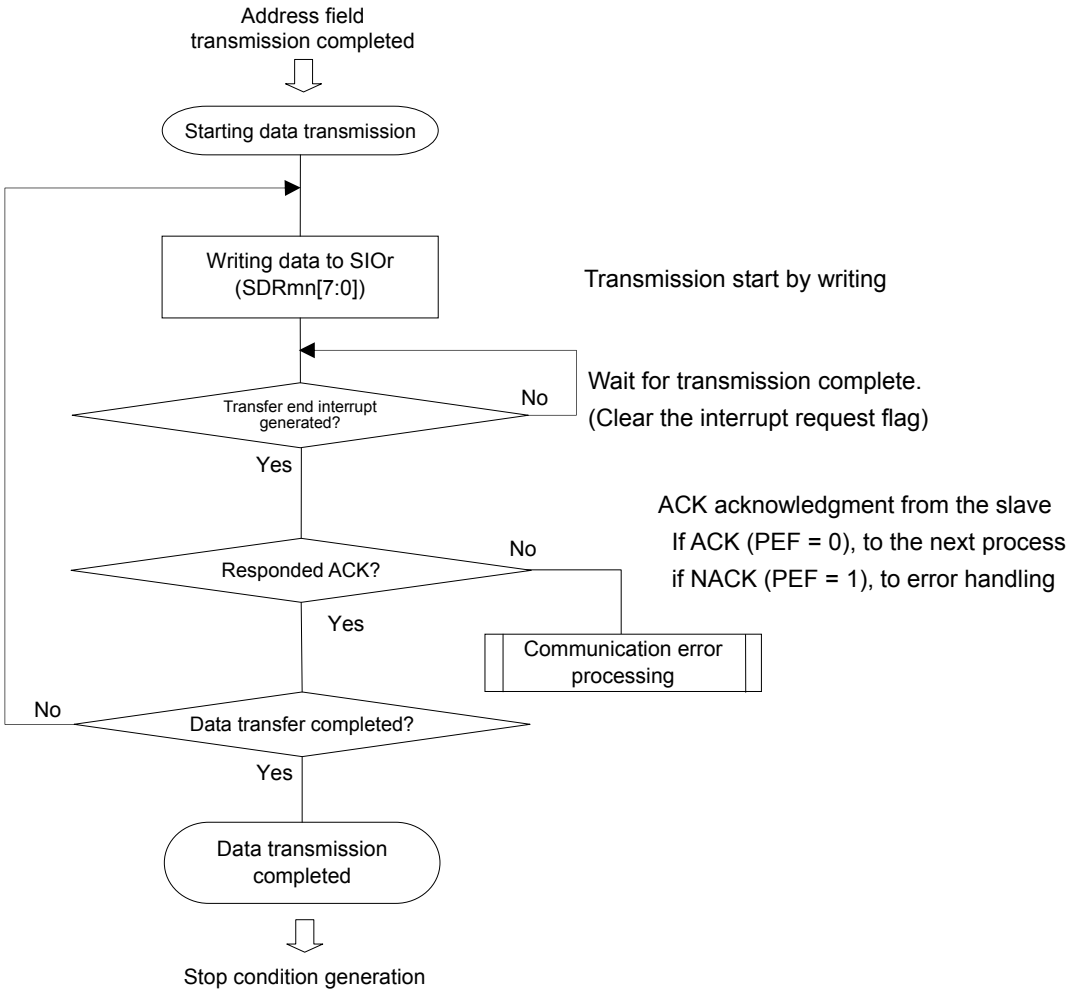

13.7.3 Data reception

Data reception is an operation to receive data to the target for transfer (slave) after transmission of an address field. After all data are received to the slave, a stop condition is generated and the bus is released.

Simplified I^2C	IIC00	IIC20
Target channel	Channel 0 of SAU0	Channel 0 of SAU1
Pins used	SCL00, SDA00[Note 1]	SCL20, SDA20[Note 1]
Interrupt	INTIIC00	INTIIC20
	Transfer end interrupt only (Setting the buffer empty interrupt is prohibited.)	
Error detection flag	Overrun error detection flag (OVFmn) only	
Transfer data length	8 bits	
Transfer rate[Note 2]	Max. $f_{MCK}/4$ [Hz] (SDRmn[15:9] = 1 or more) f_{MCK}: Operation clock frequency of target channel However, the following condition must be satisfied in each mode of I^2C. ● Max. 1 MHz (fast mode plus) ● Max. 400 kHz (fast mode) ● Max. 100 kHz (standard mode)	
Data level	Non-reversed output (default: high level)	
Parity bit	No parity bit	
Stop bit	Appending 1 bit (ACK transmission)	
Data direction	MSB first	

Notes 1. To perform communication via simplified I^2C, set the N-ch open-drain output (V_{DD} tolerance) mode (POM11, POM14 = 1) with the port output mode register (POM0, POM1). For details, see **5.3 Registers Controlling Port Function** and **5.5 Register Settings When Using Alternate Function**.
When IIC00, IIC20 are communicating with an external device with a different potential, set the N-ch open-drain output (V_{DD} tolerance) mode (POMxx = 1) also for the clock input/output pins (SCL00, SCL20).
For details, see **5.4.5 Handling different potential (1.8 V, 2.5 V) by using I/O buffers**.

2. Use this operation within a range that satisfies the conditions above and the peripheral functions characteristics in the electrical specifications (see **CHAPTER 30 ELECTRICAL SPECIFICATIONS**).

Remark m: Unit number (m = 0, 1), n: Channel number (n = 0), mn = 00, 10

(1) Register setting

Figure 13-104. Example of Contents of Registers for Data Reception of Simplified I²C (IIC00, IIC20) (1/2)

(a) Serial mode register mn (SMRmn) … Do not manipulate this register during data transmission/reception.

	15	14	13	12	11	10	9	8	7	6	5	4	3	2	1	0
SMRmn	CKSmn 0/1	CCSmn 0	0	0	0	0	0	STSmn 0 Note 1	0	SISmn0 0 Note 1	1	0	0	MDmn2 1	MDmn1 0	MDmn0 0

(b) Serial communication operation setting register mn (SCRmn) … Do not manipulate the bits of this register, except the TXEmn and RXEmn bits, during data transmission/reception.

	15	14	13	12	11	10	9	8	7	6	5	4	3	2	1	0
SCRmn	TXEmn 0	RXEmn 1	DAPmn 0	CKPmn 0	0	EOCmn 0	PTCmn1 0	PTCmn0 0	DIRmn 0	0	SLCmn1 0 Note 2	SLCmn0 1	0	1	DLSmn1 1 Note 3	DLSmn0 1

(c) Serial data register mn (SDRmn) (lower 8 bits: SIOr)

	15	14	13	12	11	10	9	8	7	6	5	4	3	2	1	0
SDRmn	Baud rate setting Note 4							0	Dummy transmit data setting (FFH)							

SIOr

(d) Serial output register m (SOm) … Do not manipulate this register during data transmission/reception.

	15	14	13	12	11	10	9	8	7	6	5	4	3	2	1	0
SOm	0	0	0	0	CKOm3 0/1 Note5	CKOm2 0/1 Note5	CKOm1 0/1 Note5	CKOm0 0/1 Note5	0	0	0	0	SOm3 0/1 Note5	SOm2 0/1 Note5	SOm1 0/1 Note5	SOm0 0/1 Note5

(e) Serial output enable register m (SOEm) … Do not manipulate this register during data transmission/reception.

	15	14	13	12	11	10	9	8	7	6	5	4	3	2	1	0
SOEm	0	0	0	0	0	0	0	0	0	0	0	0	SOEm3 0/1	SOEm2 0/1	SOEm1 0/1	SOEm0 0/1

Notes 1. Only provided for the SMR01, SMR03 and SMR11registers..

2. Only provided for the SCR00, SCR02 and SCR10registers.

3. Only provided for the SCR00, SCR01, SCR10 and SCR11 registers. This bit is fixed to 1 for the other registers.

4. The baud rate setting is not required because the baud rate has already been set when the address field was transmitted.

5. The value varies depending on the communication data during communication operation.

Remarks 1. m: Unit number (m = 0, 1), n: Channel number (n = 0), r: IIC number (r = 00, 20), mn = 00, 10

2. □: Setting is fixed in the IIC mode, ▒: Setting disabled (set to the initial value)

×: Bit that cannot be used in this mode (set to the initial value when not used in any mode)

0/1: Set to 0 or 1 depending on the usage of the user

Figure 13-104. Example of Contents of Registers for Data Reception of Simplified I²C (IIC00, IIC20) (2/2)

(f) Serial channel start register m (SSm) … Do not manipulate this register during data transmission/reception.

	15	14	13	12	11	10	9	8	7	6	5	4	3	2	1	0
SSm	0	0	0	0	0	0	0	0	0	0	0	0	SSm3 0/1	SSm2 0/1	SSm1 0/1	SSm0 0/1

Remarks 1. m: Unit number (m = 0, 1), n: Channel number (n = 0), r: IIC number (r = 00, 20), mn = 00, 10

2. ☐: Setting is fixed in the CSI master transmission mode, ▒ : Setting disabled (set to the initial value)

×: Bit that cannot be used in this mode (set to the initial value when not used in any mode)

0/1: Set to 0 or 1 depending on the usage of the user

(2) Processing flow

Figure 13-105. Timing Chart of Data Reception

(a) When starting data reception

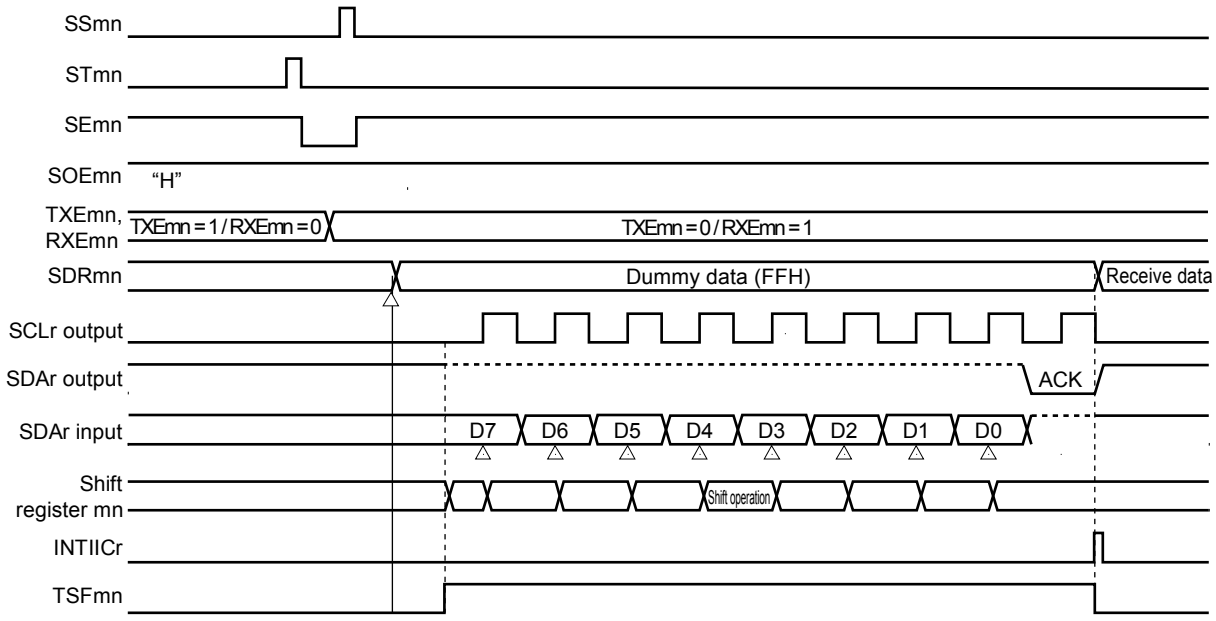

(b) When receiving last data

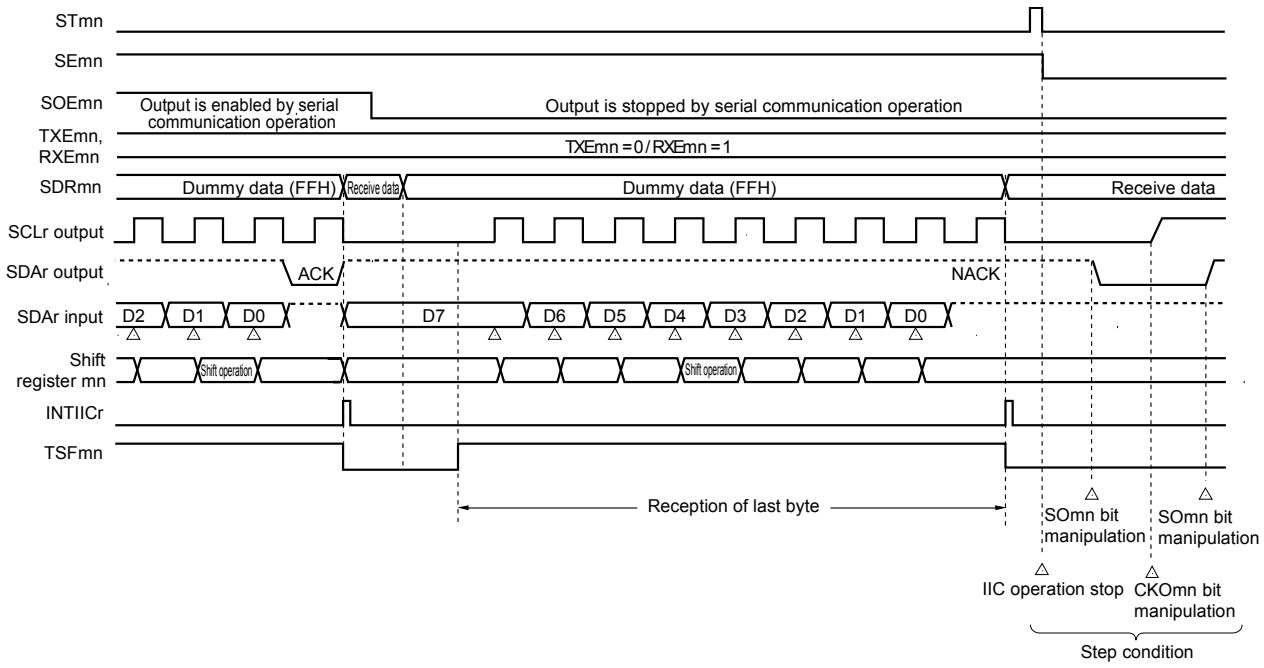

Remark m: Unit number (m = 0, 1), n: Channel number (n = 0), r: IIC number (r = 00, 20), mn = 00, 10

Figure 13-106. Flowchart of Data Reception

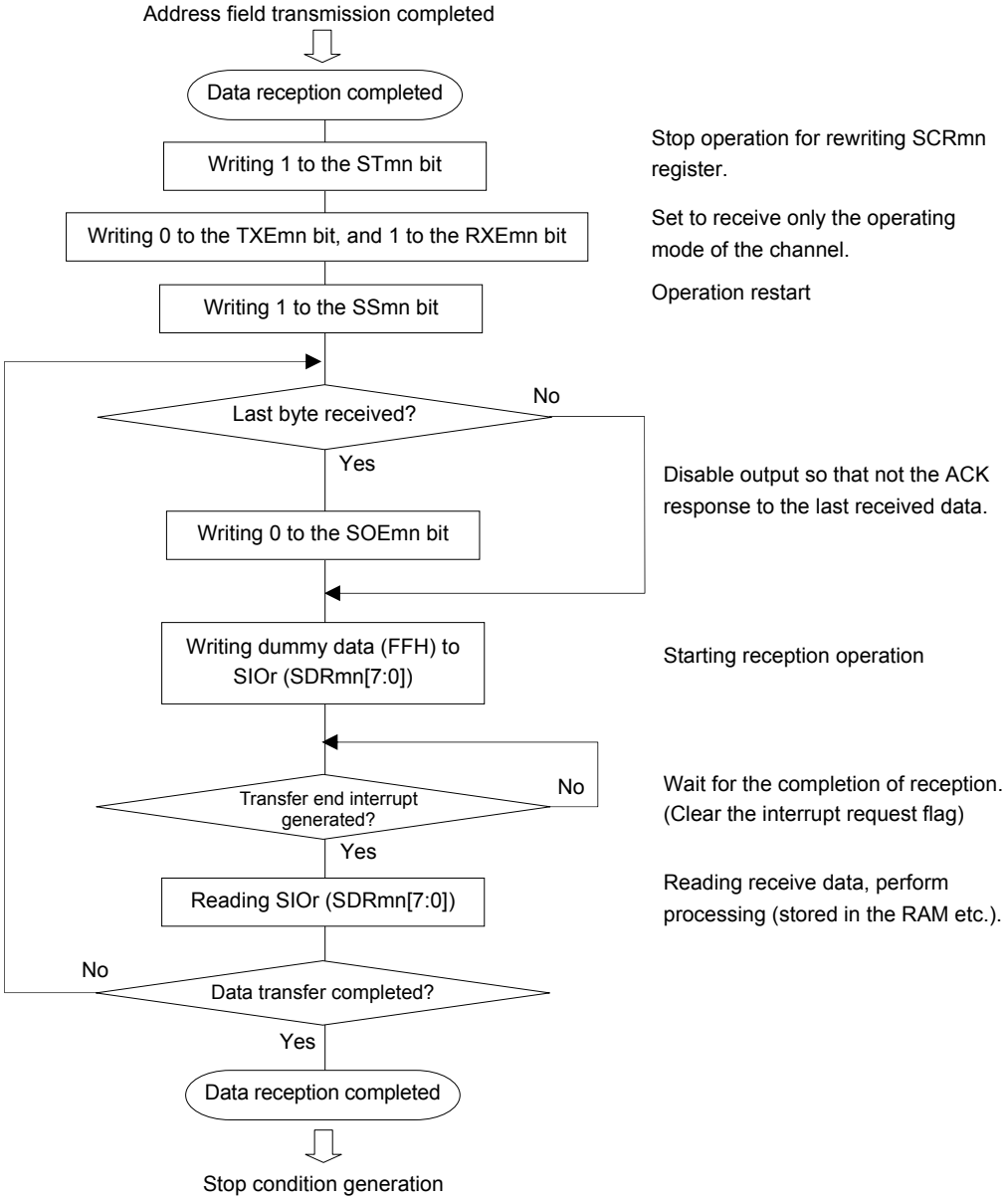

Caution ACK is not output when the last data is received (NACK). Communication is then completed by setting "1" to the STmn bit of serial channel stop register m (STm) to stop operation and generating a stop condition.

13.7.4 Stop condition generation

After all data are transmitted to or received from the target slave, a stop condition is generated and the bus is released.

(1) Processing flow

Figure 13-107. Timing Chart of Stop Condition Generation

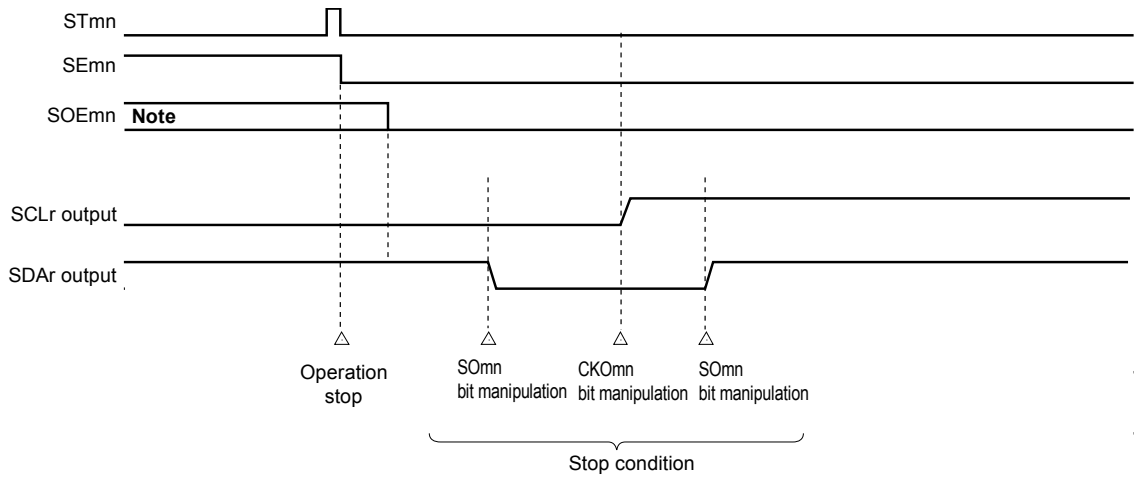

Note During a receive operation, the SOEmn bit of serial output enable register m (SOEm) is cleared to 0 before receiving the last data.

Figure 13-108. Flowchart of Stop Condition Generation

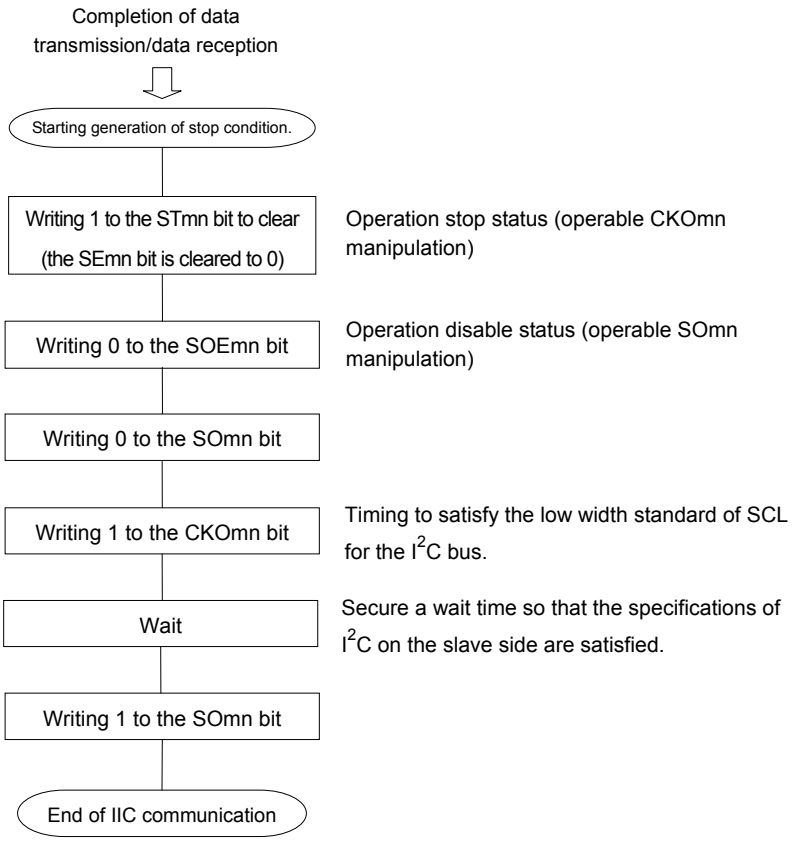

13.7.5 Calculating transfer rate

The transfer rate for simplified I^2C (IIC00, IIC20) communication can be calculated by the following expressions.

(Transfer rate) = {Operation clock (f_{MCK}) frequency of target channel} ÷ (SDRmn[15:9] + 1) ÷ 2

Caution SDRmn[15:9] must not be set to 00000000B. Be sure to set a value of 00000001B or greater for SDRmn[15:9]. The duty ratio of the SCL signal output by the simplified I^2C is 50%. The I^2C bus specifications define that the low-level width of the SCL signal is longer than the high-level width. If 400 kbps (fast mode) or 1 Mbps (fast mode plus) is specified, therefore, the low-level width of the SCL output signal becomes shorter than the value specified in the I^2C bus specifications. Make sure that the SDRmn[15:9] value satisfies the I^2C bus specifications.

Remarks 1. The value of SDRmn[15:9] is the value of bits 15 to 9 of the SDRmn register (0000001B to 1111111B) and therefore is 1 to 127.

2. m: Unit number (m = 0, 1), n: Channel number (n = 0), mn = 00, 10

The operation clock (f_{MCK}) is determined by serial clock select register m (SPSm) and bit 15 (CKSmn) of serial mode register mn (SMRmn).

Table 13-5. Selection of Operation Clock For Simplified I²C

SMRmn Register	SPSm Register								Operation Clock (f_{MCK})[Note]	
CKSmn	PRS m13	PRS m12	PRS m11	PRS m10	PRS m03	PRS m02	PRS m01	PRS m00		f_{CLK} = 32 MHz
0	X	X	X	X	0	0	0	0	f_{CLK}	32 MHz
	X	X	X	X	0	0	0	1	$f_{CLK}/2$	16 MHz
	X	X	X	X	0	0	1	0	$f_{CLK}/2^2$	8 MHz
	X	X	X	X	0	0	1	1	$f_{CLK}/2^3$	4 MHz
	X	X	X	X	0	1	0	0	$f_{CLK}/2^4$	2 MHz
	X	X	X	X	0	1	0	1	$f_{CLK}/2^5$	1 MHz
	X	X	X	X	0	1	1	0	$f_{CLK}/2^6$	500 kHz
	X	X	X	X	0	1	1	1	$f_{CLK}/2^7$	250 kHz
	X	X	X	X	1	0	0	0	$f_{CLK}/2^8$	125 kHz
	X	X	X	X	1	0	0	1	$f_{CLK}/2^9$	62.5 kHz
	X	X	X	X	1	0	1	0	$f_{CLK}/2^{10}$	31.25 kHz
	X	X	X	X	1	0	1	1	$f_{CLK}/2^{11}$	15.63 kHz
1	0	0	0	0	X	X	X	X	f_{CLK}	32 MHz
	0	0	0	1	X	X	X	X	$f_{CLK}/2$	16 MHz
	0	0	1	0	X	X	X	X	$f_{CLK}/2^2$	8 MHz
	0	0	1	1	X	X	X	X	$f_{CLK}/2^3$	4 MHz
	0	1	0	0	X	X	X	X	$f_{CLK}/2^4$	2 MHz
	0	1	0	1	X	X	X	X	$f_{CLK}/2^5$	1 MHz
	0	1	1	0	X	X	X	X	$f_{CLK}/2^6$	500 kHz
	0	1	1	1	X	X	X	X	$f_{CLK}/2^7$	250 kHz
	1	0	0	0	X	X	X	X	$f_{CLK}/2^8$	125 kHz
	1	0	0	1	X	X	X	X	$f_{CLK}/2^9$	62.5 kHz
	1	0	1	0	X	X	X	X	$f_{CLK}/2^{10}$	31.25 kHz
	1	0	1	1	X	X	X	X	$f_{CLK}/2^{11}$	15.63 kHz
Other than above									Setting prohibited	

Note When changing the clock selected for f_{CLK} (by changing the system clock control register (CKC) value), do so after having stopped (serial channel stop register m (STm) = 000FH) the operation of the serial array unit (SAU).

Remarks 1. X: Don't care

2. m: Unit number (m = 0, 1), n: Channel number (n = 0), mn = 00, 10

Here is an example of setting an I²C transfer rate where f_{MCK} = f_{CLK} = 32 MHz.

I²C Transfer Mode (Desired Transfer Rate)	f_{CLK} = 32 MHz			
	Operation Clock (f_{MCK})	SDRmn[15:9]	Calculated Transfer Rate	Error from Desired Transfer Rate
100 kHz	$f_{CLK}/2$	79	100 kHz	0.0%
400 kHz	f_{CLK}	41	380 kHz	5.0%[Note]
1 MHz	f_{CLK}	18	0.84 MHz	16.0%[Note]

Note The error cannot be set to about 0% because the duty ratio of the SCL signal is 50%.

13.7.6 Procedure for processing errors that occurred during simplified I²C (IIC00, IIC20) communication

The procedure for processing errors that occurred during simplified I²C (IIC00, IIC20) communication is described in **Figures 13-108** and **13-109**.

Figure 13-109. Processing Procedure in Case of Overrun Error

Software Manipulation	Hardware Status	Remark
Reads serial data register mn (SDRmn). →	The BFFmn bit of the SSRmn register is set to 0 and channel n is enabled to receive data.	This is to prevent an overrun error if the next reception is completed during error processing.
Reads serial status register mn (SSRmn).		The error type is identified and the read value is used to clear the error flag.
Writes 1 to serial flag clear trigger register mn (SIRmn). →	The error flag is cleared.	The error only during reading can be cleared, by writing the value read from the SSRmn register to the SIRmn register without modification.

Figure 13-110. Processing Procedure in Case of ACK Error in Simplified I²C Mode

Software Manipulation	Hardware Status	Remark
Reads serial status register mn (SSRmn).		The error type is identified and the read value is used to clear the error flag.
Writes 1 to serial flag clear trigger register mn (SIRmn). →	The error flag is cleared.	The error only during reading can be cleared, by writing the value read from the SSRmn register to the SIRmn register without modification.
Sets the STmn bit of serial channel stop register m (STm) to 1. →	The SEmn bit of serial channel enable status register m (SEm) is set to 0 and channel n stops operation.	The slave is not ready for reception because ACK is not returned. Therefore, a stop condition is created, the bus is released, and communication is started again from the start condition. Or, a restart condition is generated and transmission can be redone from address transmission.
Creates a stop condition.		
Creates a start condition.		
Sets the SSmn bit of serial channel start register m (SSm) to 1. →	The SEmn bit of serial channel enable status register m (SEm) is set to 1 and channel n is enabled to operate.	

Remark m: Unit number (m = 0, 1), n: Channel number (n = 0), r: IIC number (r = 00, 20), mn = 00, 10

CHAPTER 14 SERIAL INTERFACE IICA

14.1 Functions of Serial Interface IICA

Serial interface IICA has the following three modes.

(1) Operation stop mode

This mode is used when serial transfers are not performed. It can therefore be used to reduce power consumption.

(2) I^2C bus mode (multimaster supported)

This mode is used for 8-bit data transfers with several devices via two lines: a serial clock (SCLAn) line and a serial data bus (SDAAn) line.

This mode complies with the I^2C bus format and the master device can generated “start condition”, “address”, “transfer direction specification”, “data”, and “stop condition” data to the slave device, via the serial data bus. The slave device automatically detects these received status and data by hardware. This function can simplify the part of application program that controls the I^2C bus.

Since the SCLAn and SDAAn pins are used for open drain outputs, serial interface IICA requires pull-up resistors for the serial clock line and the serial data bus line.

(3) Wakeup mode

The STOP mode can be released by generating an interrupt request signal (INTIICAn) when an extension code from the master device or a local address has been received while in STOP mode. This can be set by using the WUPn bit of IICA control register n1 (IICCTLn1).

Remark n = 0

Figure 14-1 shows a block diagram of serial interface IICA.

Figure 14-1. Block Diagram of Serial Interface IICA0

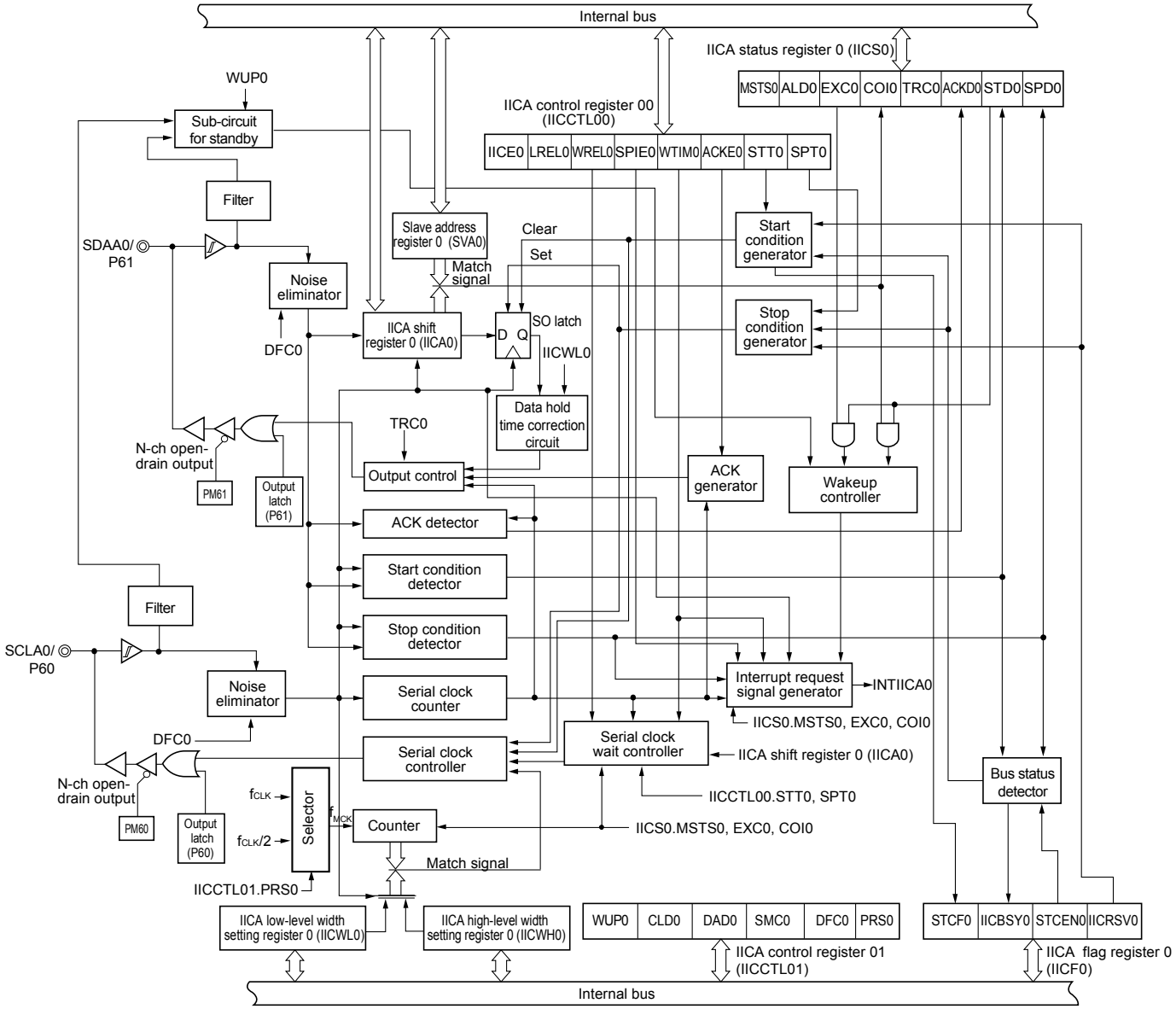

Figure 14-2 shows a serial bus configuration example.

Figure 14-2. Serial Bus Configuration Example Using I²C Bus

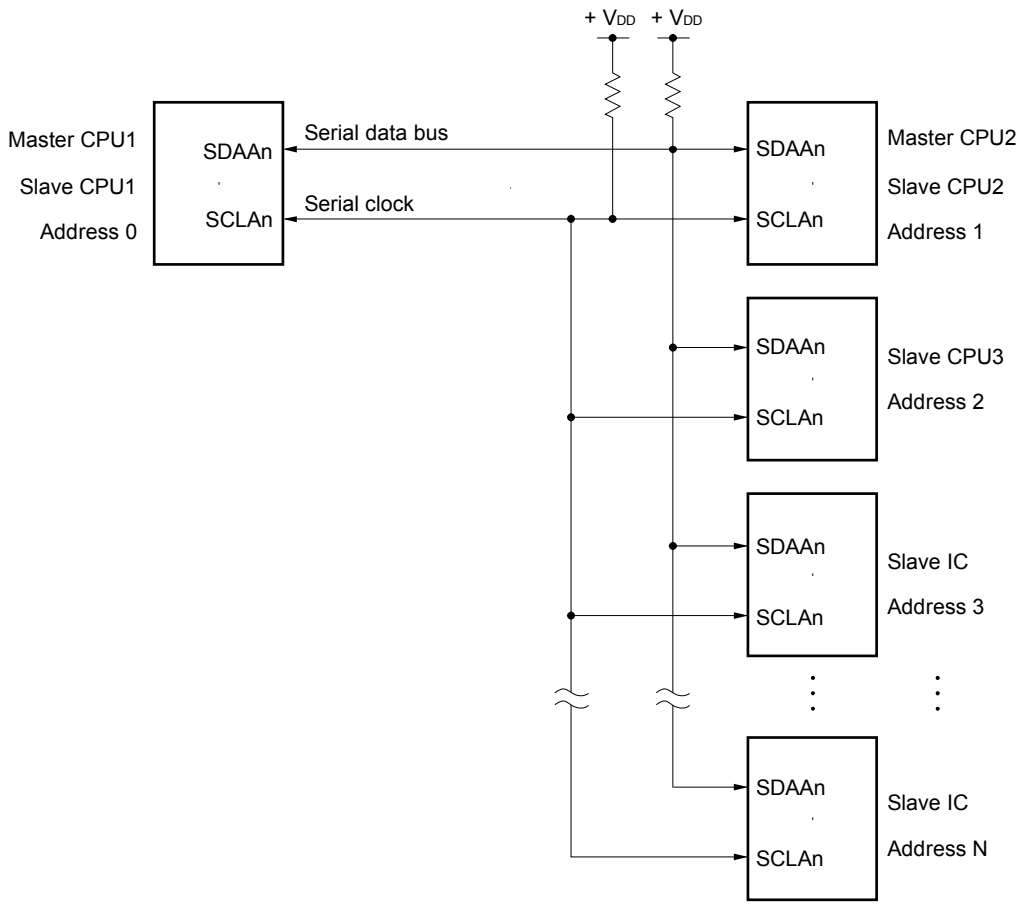

Remark n = 0

14.2 Configuration of Serial Interface IICA

Serial interface IICA includes the following hardware.

Table 14-1. Configuration of Serial Interface IICA

Item	Configuration
Registers	IICA shift register n (IICAn) Slave address register n (SVAn)
Control registers	Peripheral enable register 0 (PER0) IICA control register n0 (IICCTLn0) IICA status register n (IICSn) IICA flag register n (IICFn) IICA control register n1 (IICCTLn1) IICA low-level width setting register n (IICWLn) IICA high-level width setting register n (IICWHn) Port mode register 6 (PM6) Port register 6 (P6)

Remark n = 0

(1) IICA shift register n (IICAn)

The IICAn register is used to convert 8-bit serial data to 8-bit parallel data and vice versa in synchronization with the serial clock. The IICAn register can be used for both transmission and reception.

The actual transmit and receive operations can be controlled by writing and reading operations to the IICAn register.

Cancel the wait state and start data transfer by writing data to the IICAn register during the wait period.

The IICAn register can be set by an 8-bit memory manipulation instruction.

Reset signal generation clears IICAn to 00H.

Figure 14-3. Format of IICA Shift Register n (IICA)

Address: FFF50H (IICA0), FFF54H (IICA1) After reset: 00H R/W

Symbol	7	6	5	4	3	2	1	0
IICAn								

Cautions 1. Do not write data to the IICAn register during data transfer.

2. Write or read the IICAn register only during the wait period. Accessing the IICAn register in a communication state other than during the wait period is prohibited. When the device serves as the master, however, the IICAn register can be written only once after the communication trigger bit (STTn) is set to 1.

3. When communication is reserved, write data to the IICAn register after the interrupt triggered by a stop condition is detected.

Remark n = 0

(2) Slave address register n (SVAn)

This register stores seven bits of local addresses {A6, A5, A4, A3, A2, A1, A0} when in slave mode.
The SVAn register can be set by an 8-bit memory manipulation instruction.
However, rewriting to this register is prohibited while STDn = 1 (while the start condition is detected).
Reset signal generation clears the SVAn register to 00H.

Figure 14-4. Format of Slave Address Register n (SVAn)

Address: F0234H (SVA0), F023DH (SVA1) After reset: 00H R/W

Symbol	7	6	5	4	3	2	1	0
SVAn	A6	A5	A4	A3	A2	A1	A0	0[Note]

Note Bit 0 is fixed to 0.

(3) SO latch

The SO latch is used to retain the SDAAn pin's output level.

(4) Wakeup controller

This circuit generates an interrupt request (INTIICAn) when the address received by this register matches the address value set to the slave address register n (SVAn) or when an extension code is received.

(5) Serial clock counter

This counter counts the serial clocks that are output or input during transmit/receive operations and is used to verify that 8-bit data was transmitted or received.

(6) Interrupt request signal generator

This circuit controls the generation of interrupt request signals (INTIICAn).
An I^2C interrupt request is generated by the following two triggers.

- Falling edge of eighth or ninth clock of the serial clock (set by the WTIMn bit)
- Interrupt request generated when a stop condition is detected (set by the SPIEn bit)

Remark WTIMn bit: Bit 3 of IICA control register n0 (IICCTLn0)
SPIEn bit: Bit 4 of IICA control register n0 (IICCTLn0)

(7) Serial clock controller

In master mode, this circuit generates the clock output via the SCLAn pin from a sampling clock.

(8) Serial clock wait controller

This circuit controls the wait timing.

(9) ACK generator, stop condition detector, start condition detector, and ACK detector

These circuits generate and detect each status.

(10) Data hold time correction circuit

This circuit generates the hold time for data corresponding to the falling edge of the serial clock.

Remark n = 0

(11) Start condition generator

This circuit generates a start condition when the STTn bit is set to 1.

However, in the communication reservation disabled status (IICRSVn bit = 1), when the bus is not released (IICBSYn bit = 1), start condition requests are ignored and the STCFn bit is set to 1.

(12) Stop condition generator

This circuit generates a stop condition when the SPTn bit is set to 1.

(13) Bus status detector

This circuit detects whether or not the bus is released by detecting start conditions and stop conditions.

However, as the bus status cannot be detected immediately following operation, the initial status is set by the STCENn bit.

Remarks 1. STTn bit: Bit 1 of IICA control register n0 (IICCTLn0)
SPTn bit: Bit 0 of IICA control register n0 (IICCTLn0)
IICRSVn bit: Bit 0 of IICA flag register n (IICFn)
IICBSYn bit: Bit 6 of IICA flag register n (IICFn)
STCFn bit: Bit 7 of IICA flag register n (IICFn)
STCENn bit: Bit 1 of IICA flag register n (IICFn)

2. n = 0

14.3 Registers Controlling Serial Interface IICA

Serial interface IICA is controlled by the following registers.

- Peripheral enable register 0 (PER0)
- IICA control register n0 (IICCTLn0)
- IICA flag register n (IICFn)
- IICA status register n (IICSn)
- IICA control register n1 (IICCTLn1)
- IICA low-level width setting register n (IICWLn)
- IICA high-level width setting register n (IICWHn)
- Port mode register 6 (PM6)
- Port register 6 (P6)

Remark n = 0

14.3.1 Peripheral enable register 0 (PER0)

This register is used to enable or disable supplying the clock to the peripheral hardware. Clock supply to a hardware macro that is not used is stopped in order to reduce the power consumption and noise.

When serial interface IICAn is used, be sure to set bits 6, 4 (IICA1EN, IICA0EN) of this register to 1.

The PER0 register can be set by a 1-bit or 8-bit memory manipulation instruction.

Reset signal generation clears this register to 00H.

Figure 14-5. Format of Peripheral Enable Register 0 (PER0)

Address: F00F0H After reset: 00H R/W

Symbol	<7>	6	<5>	<4>	<3>	<2>	1	<0>
PER0	RTCEN	0	ADCEN	IICA0EN	SAU1EN	SAU0EN	0	TAU0EN

IICAnEN	Control of serial interface IICAn input clock supply
0	Stops input clock supply. ● SFR used by serial interface IICAn cannot be written. ● Serial interface IICAn is in the reset status.
1	Enables input clock supply. ● SFR used by serial interface IICAn can be read/written.

Cautions 1. When setting serial interface IICA, be sure to set the following registers first while the IICAnEN bit is set to 1. If IICAnEN = 0, the control registers of serial interface IICA are set to their initial values, and writing to them is ignored (except for port mode register 6 (PM6) and port register 6 (P6)).

- **IICA control register n0 (IICCTLn0)**
- **IICA flag register n (IICFn)**
- **IICA status register n (IICSn)**
- **IICA control register n1 (IICCTLn1)**
- **IICA low-level width setting register n (IICWLn)**
- **IICA high-level width setting register n (IICWHn)**

2. Be sure to clear bits 1 and 6 to "0".

Remark n = 0

14.3.2 IICA control register n0 (IICCTLn0)

This register is used to enable/stop I^2C operations, set wait timing, and set other I^2C operations.

The IICCTLn0 register can be set by a 1-bit or 8-bit memory manipulation instruction. However, set the SPIEn, WTIMn, and ACKEn bits while IICEn = 0 or during the wait period. These bits can be set at the same time when the IICEn bit is set from "0" to "1".

Reset signal generation clears this register to 00H.

Remark n = 0

Figure 14-6. Format of IICA Control Register n0 (IICCTLn0) (1/4)

Address: F0230H (IICCTL00), F0238H (IICCTL10) After reset: 00H R/W

Symbol	<7>	<6>	<5>	<4>	<3>	<2>	<1>	<0>
IICCTLn0	IICEn	LRELn	WRELn	SPIEn	WTIMn	ACKEn	STTn	SPTn

IICEn	I^2C operation enable
0	Stop operation. Reset the IICA status register n (IICSn)[Note 1]. Stop internal operation.
1	Enable operation.
Be sure to set this bit (1) while the SCLAn and SDAAn lines are at high level.	
Condition for clearing (IICEn = 0)	Condition for setting (IICEn = 1)
● Cleared by instruction ● Reset	● Set by instruction

LRELn[Notes 2, 3]	Exit from communications
0	Normal operation
1	This exits from the current communications and sets standby mode. This setting is automatically cleared to 0 after being executed. Its uses include cases in which a locally irrelevant extension code has been received. The SCLAn and SDAAn lines are set to high impedance. The following flags of IICA control register n0 (IICCTLn0) and the IICA status register n (IICSn) are cleared to 0. • STTn • SPTn • MSTSn • EXCn • COIn • TRCn • ACKDn • STDn
The standby mode following exit from communications remains in effect until the following communications entry conditions are met. ● After a stop condition is detected, restart is in master mode. ● An address match or extension code reception occurs after the start condition.	
Condition for clearing (LRELn = 0)	Condition for setting (LRELn = 1)
● Automatically cleared after execution ● Reset	● Set by instruction

WRELn[Notes 2, 3]	Wait cancellation
0	Do not cancel wait
1	Cancel wait. This setting is automatically cleared after wait is canceled.
When the WRELn bit is set (wait canceled) during the wait period at the ninth clock pulse in the transmission status (TRCn = 1), the SDAAn line goes into the high impedance state (TRCn = 0).	
Condition for clearing (WRELn = 0)	Condition for setting (WRELn = 1)
● Automatically cleared after execution ● Reset	● Set by instruction

Notes 1. The IICA status register n (IICSn), the STCFn and IICBSYn bits of the IICA flag register n (IICFn), and the CLDn and DADn bits of IICA control register n1 (IICCTLn1) are reset.

2. The signal of this bit is invalid while IICEn is 0.

3. When the LRELn and WRELn bits are read, 0 is always read.

Caution **If the operation of I^2C is enabled (IICEn = 1) when the SCLAn line is high level, the SDAAn line is low level, and the digital filter is turned on (DFCn bit of IICCTLn1 register = 1), a start condition will be inadvertently detected immediately. In this case, set (1) the LRELn bit by using a 1-bit memory manipulation instruction immediately after enabling operation of I^2C (IICEn = 1).**

Remark n = 0

Figure 14-6. Format of IICA Control Register n0 (IICCTLn0) (2/4)

SPIEn[Note 1]	Enable/disable generation of interrupt request when stop condition is detected
0	Disable
1	Enable
If the WUPn bit of IICA control register n1 (IICCTLn1) is 1, no stop condition interrupt will be generated even if SPIEn = 1.	
Condition for clearing (SPIEn = 0)	Condition for setting (SPIEn = 1)
● Cleared by instruction ● Reset	● Set by instruction

WTIMn[Note 1]	Control of wait and interrupt request generation
0	Interrupt request is generated at the eighth clock's falling edge. Master mode: After output of eight clocks, clock output is set to low level and wait is set. Slave mode: After input of eight clocks, the clock is set to low level and wait is set for master device.
1	Interrupt request is generated at the ninth clock's falling edge. Master mode: After output of nine clocks, clock output is set to low level and wait is set. Slave mode: After input of nine clocks, the clock is set to low level and wait is set for master device.
An interrupt is generated at the falling edge of the ninth clock during address transfer independently of the setting of this bit. The setting of this bit is valid when the address transfer is completed. When in master mode, a wait is inserted at the falling edge of the ninth clock during address transfers. For a slave device that has received a local address, a wait is inserted at the falling edge of the ninth clock after an acknowledge ($\overline{\text{ACK}}$) is issued. However, when the slave device has received an extension code, a wait is inserted at the falling edge of the eighth clock.	
Condition for clearing (WTIMn = 0)	Condition for setting (WTIMn = 1)
● Cleared by instruction ● Reset	● Set by instruction

ACKEn[Notes 1, 2]	Acknowledgment control
0	Disable acknowledgment.
1	Enable acknowledgment. During the ninth clock period, the SDAAn line is set to low level.
Condition for clearing (ACKEn = 0)	Condition for setting (ACKEn = 1)
● Cleared by instruction ● Reset	● Set by instruction

Notes 1. The signal of this bit is invalid while IICEn is 0. Set this bit during that period.

2. The set value is invalid during address transfer and if the code is not an extension code.
When the device serves as a slave and the addresses match, an acknowledgment is generated regardless of the set value.

Remark n = 0

Figure 14-6. Format of IICA Control Register n0 (IICCTLn0) (3/4)

STTn[Notes 1, 2]	Start condition trigger
0	Do not generate a start condition.
1	When bus is released (in standby state, when IICBSYn = 0): If this bit is set (1), a start condition is generated (startup as the master). When a third party is communicating: ● When communication reservation function is enabled (IICRSVn = 0) Functions as the start condition reservation flag. When set to 1, automatically generates a start condition after the bus is released. ● When communication reservation function is disabled (IICRSVn = 1) Even if this bit is set (1), the STTn bit is cleared and the STTn clear flag (STCFn) is set (1). No start condition is generated. In the wait state (when master device): Generates a restart condition after releasing the wait.

Cautions concerning set timing

- For master reception: Cannot be set to 1 during transfer. Can be set to 1 only in the waiting period when the ACKEn bit has been cleared to 0 and slave has been notified of final reception.
- For master transmission: A start condition cannot be generated normally during the acknowledge period. Set to 1 during the wait period that follows output of the ninth clock.
- Cannot be set to 1 at the same time as stop condition trigger (SPTn).
- Once STTn is set (1), setting it again (1) before the clear condition is met is not allowed.

Condition for clearing (STTn = 0)	Condition for setting (STTn = 1)
● Cleared by setting the STTn bit to 1 while communication reservation is prohibited. ● Cleared by loss in arbitration ● Cleared after start condition is generated by master device ● Cleared by LRELn = 1 (exit from communications) ● When IICEn = 0 (operation stop) ● Reset	● Set by instruction

Notes 1. The signal of this bit is invalid while IICEn is 0.

2. The STTn bit is always read as 0.

Remarks 1. IICRSVn: Bit 0 of IIC flag register n (IICFn)

STCFn: Bit 7 of IIC flag register n (IICFn)

2. n = 0

Figure 14-6. Format of IICA Control Register n0 (IICCTLn0) (4/4)

SPTn[Note]	Stop condition trigger
0	Stop condition is not generated.
1	Stop condition is generated (termination of master device's transfer).

Cautions concerning set timing
- For master reception: Cannot be set to 1 during transfer.
  Can be set to 1 only in the waiting period when the ACKEn bit has been cleared to 0 and slave has been notified of final reception.
- For master transmission: A stop condition cannot be generated normally during the acknowledge period.
  Therefore, set it during the wait period that follows output of the ninth clock.
- Cannot be set to 1 at the same time as start condition trigger (STTn).
- The SPTn bit can be set to 1 only when in master mode.
- When the WTIMn bit has been cleared to 0, if the SPTn bit is set to 1 during the wait period that follows output of eight clocks, note that a stop condition will be generated during the high-level period of the ninth clock. The WTIMn bit should be changed from 0 to 1 during the wait period following the output of eight clocks, and the SPTn bit should be set to 1 during the wait period that follows the output of the ninth clock.
- Once SPTn is set (1), setting it again (1) before the clear condition is met is not allowed.

Condition for clearing (SPTn = 0)	Condition for setting (SPTn = 1)
● Cleared by loss in arbitration ● Automatically cleared after stop condition is detected ● Cleared by LRELn = 1 (exit from communications) ● When IICEn = 0 (operation stop) ● Reset	● Set by instruction

Note When the SPTn register is read, 0 is always read.

Caution When bit 3 (TRCn) of the IICA status register n (IICSn) is set to 1 (transmission status), bit 5 (WRELn) of IICA control register n0 (IICCTLn0) is set to 1 during the ninth clock and wait is canceled, after which the TRCn bit is cleared (reception status) and the SDAAn line is set to high impedance. Release the wait performed while the TRCn bit is 1 (transmission status) by writing to the IICA shift register n.

Remarks 1. Bit 0 (SPTn) becomes 0 when it is read after data setting.
2. n = 0

14.3.3 IICA status register n (IICSn)

This register indicates the status of I^2C.

The IICSn register is read by a 1-bit or 8-bit memory manipulation instruction only when STTn = 1 and during the wait period.

Reset signal generation clears this register to 00H.

Caution Reading the IICSn register while the address match wakeup function is enabled (WUPn = 1) in STOP mode is prohibited. When the WUPn bit is changed from 1 to 0 (wakeup operation is stopped), regardless of the INTIICAn interrupt request, the change in status is not reflected until the next start condition or stop condition is detected. To use the wakeup function, therefore, enable (SPIEn = 1) the interrupt generated by detecting a stop condition and read the IICSn register after the interrupt has been detected.

Remark STTn: bit 1 of IICA control register n0 (IICCTLn0)
WUPn: bit 7 of IICA control register n1 (IICCTLn1)

Figure 14-7. Format of IICA Status Register n (IICSn) (1/3)

Address: FFF51H (IICS0), FFF55H (IICS1) After reset: 00H R

Symbol	<7>	<6>	<5>	<4>	<3>	<2>	<1>	<0>
IICSn	MSTSn	ALDn	EXCn	COIn	TRCn	ACKDn	STDn	SPDn

MSTSn	Master status check flag
0	Slave device status or communication standby status
1	Master device communication status

Condition for clearing (MSTSn = 0)	Condition for setting (MSTSn = 1)
● When a stop condition is detected ● When ALDn = 1 (arbitration loss) ● Cleared by LRELn = 1 (exit from communications) ● When the IICEn bit changes from 1 to 0 (operation stop) ● Reset	● When a start condition is generated

ALDn	Detection of arbitration loss
0	This status means either that there was no arbitration or that the arbitration result was a “win”.
1	This status indicates the arbitration result was a “loss”. The MSTSn bit is cleared.

Condition for clearing (ALDn = 0)	Condition for setting (ALDn = 1)
● Automatically cleared after the IICSn register is read[Note] ● When the IICEn bit changes from 1 to 0 (operation stop) ● Reset	● When the arbitration result is a “loss”.

Note This register is also cleared when a 1-bit memory manipulation instruction is executed for bits other than the IICSn register. Therefore, when using the ALDn bit, read the data of this bit before the data of the other bits.

Remarks 1. LRELn: Bit 6 of IICA control register n0 (IICCTLn0)
IICEn: Bit 7 of IICA control register n0 (IICCTLn0)
2. n = 0

Figure 14-7. Format of IICA Status Register n (IICSn) (2/3)

EXCn	Detection of extension code reception
0	Extension code was not received.
1	Extension code was received.

Condition for clearing (EXCn = 0)	Condition for setting (EXCn = 1)
● When a start condition is detected ● When a stop condition is detected ● Cleared by LRELn = 1 (exit from communications) ● When the IICEn bit changes from 1 to 0 (operation stop) ● Reset	● When the higher four bits of the received address data is either “0000” or “1111” (set at the rising edge of the eighth clock).

COIn	Detection of matching addresses
0	Addresses do not match.
1	Addresses match.

Condition for clearing (COIn = 0)	Condition for setting (COIn = 1)
● When a start condition is detected ● When a stop condition is detected ● Cleared by LRELn = 1 (exit from communications) ● When the IICEn bit changes from 1 to 0 (operation stop) ● Reset	● When the received address matches the local address (slave address register n (SVAn)) (set at the rising edge of the eighth clock).

TRCn	Detection of transmit/receive status
0	Receive status (other than transmit status). The SDAAn line is set for high impedance.
1	Transmit status. The value in the SOn latch is enabled for output to the SDAAn line (valid starting at the falling edge of the first byte’s ninth clock).

Condition for clearing (TRCn = 0)	Condition for setting (TRCn = 1)
<Both master and slave> ● When a stop condition is detected ● Cleared by LRELn = 1 (exit from communications) ● When the IICEn bit changes from 1 to 0 (operation stop) ● Cleared by WRELn = 1[Note] (wait cancel) ● When the ALDn bit changes from 0 to 1 (arbitration loss) ● Reset ● When not used for communication (MSTSn, EXCn, COIn = 0) <Master> ● When “1” is output to the first byte’s LSB (transfer direction specification bit) <Slave> ● When a start condition is detected ● When “0” is input to the first byte’s LSB (transfer direction specification bit)	<Master> ● When a start condition is generated ● When 0 (master transmission) is output to the LSB (transfer direction specification bit) of the first byte (during address transfer) <Slave> ● When 1 (slave transmission) is input to the LSB (transfer direction specification bit) of the first byte from the master (during address transfer)

Note When bit 3 (TRCn) of the IICA status register n (IICSn) is set to 1 (transmission status), bit 5 (WRELn) of IICA control register n0 (IICCTLn0) is set to 1 during the ninth clock and wait is canceled, after which the TRCn bit is cleared (reception status) and the SDAAn line is set to high impedance. Release the wait performed while the TRCn bit is 1 (transmission status) by writing to the IICA shift register n.

Remarks 1. LRELn: Bit 6 of IICA control register n0 (IICCTLn0)
IICEn: Bit 7 of IICA control register n0 (IICCTLn0)
2. n = 0

Figure 14-7. Format of IICA Status Register n (IICSn) (3/3)

ACKDn	Detection of acknowledge ($\overline{ACK}$)
0	Acknowledge was not detected.
1	Acknowledge was detected.

Condition for clearing (ACKDn = 0)	Condition for setting (ACKDn = 1)
● When a stop condition is detected ● At the rising edge of the next byte's first clock ● Cleared by LRELn = 1 (exit from communications) ● When the IICEn bit changes from 1 to 0 (operation stop) ● Reset	● After the SDAAn line is set to low level at the rising edge of SCLAn line's ninth clock

STDn	Detection of start condition
0	Start condition was not detected.
1	Start condition was detected. This indicates that the address transfer period is in effect.

Condition for clearing (STDn = 0)	Condition for setting (STDn = 1)
● When a stop condition is detected ● At the rising edge of the next byte's first clock following address transfer ● Cleared by LRELn = 1 (exit from communications) ● When the IICEn bit changes from 1 to 0 (operation stop) ● Reset	● When a start condition is detected

SPDn	Detection of stop condition
0	Stop condition was not detected.
1	Stop condition was detected. The master device's communication is terminated and the bus is released.

Condition for clearing (SPDn = 0)	Condition for setting (SPDn = 1)
● At the rising edge of the address transfer byte's first clock following setting of this bit and detection of a start condition ● When the WUPn bit changes from 1 to 0 ● When the IICEn bit changes from 1 to 0 (operation stop) ● Reset	● When a stop condition is detected

Remarks 1. LRELn: Bit 6 of IICA control register n0 (IICCTLn0)
IICEn: Bit 7 of IICA control register n0 (IICCTLn0)
2. n = 0

14.3.4 IICA flag register n (IICFn)

This register sets the operation mode of I^2C and indicates the status of the I^2C bus.

The IICFn register can be set by a 1-bit or 8-bit memory manipulation instruction. However, the STTn clear flag (STCFn) and I^2C bus status flag (IICBSYn) bits are read-only.

The IICRSVn bit can be used to enable/disable the communication reservation function.

The STCENn bit can be used to set the initial value of the IICBSYn bit.

The IICRSVn and STCENn bits can be written only when the operation of I^2C is disabled (bit 7 (IICEn) of IICA control register n0 (IICCTLn0) = 0). When operation is enabled, the IICFn register can be read.

Reset signal generation clears this register to 00H.

Figure 14-8. Format of IICA Flag Register n (IICFn)

Address: FFF52H (IICF0), FFF56H (IICF1) After reset: 00H R/W[Note]

Symbol	<7>	<6>	5	4	3	2	<1>	<0>
IICFn	STCFn	IICBSYn	0	0	0	0	STCENn	IICRSVn

STCFn	STTn clear flag
0	Generate start condition
1	Start condition generation unsuccessful: clear the STTn flag

Condition for clearing (STCFn = 0)	Condition for setting (STCFn = 1)
· Cleared by STTn = 1 · When IICEn = 0 (operation stop) · Reset	· Generating start condition unsuccessful and the STTn bit cleared to 0 when communication reservation is disabled (IICRSVn = 1).

IICBSYn	I^2C bus status flag
0	Bus release status (communication initial status when STCENn = 1)
1	Bus communication status (communication initial status when STCENn = 0)

Condition for clearing (IICBSYn = 0)	Condition for setting (IICBSYn = 1)
· Detection of stop condition · When IICEn = 0 (operation stop) · Reset	· Detection of start condition · Setting of the IICEn bit when STCENn = 0

STCENn	Initial start enable trigger
0	After operation is enabled (IICEn = 1), enable generation of a start condition upon detection of a stop condition.
1	After operation is enabled (IICEn = 1), enable generation of a start condition without detecting a stop condition.

Condition for clearing (STCENn = 0)	Condition for setting (STCENn = 1)
· Cleared by instruction · Detection of start condition · Reset	· Set by instruction

IICRSVn	Communication reservation function disable bit
0	Enable communication reservation
1	Disable communication reservation

Condition for clearing (IICRSVn = 0)	Condition for setting (IICRSVn = 1)
· Cleared by instruction · Reset	· Set by instruction

Note Bits 6 and 7 are read-only.

Cautions 1. Write to the STCENn bit only when the operation is stopped (IICEn = 0).

2. As the bus release status (IICBSYn = 0) is recognized regardless of the actual bus status when STCENn = 1, when generating the first start condition (STTn = 1), it is necessary to verify that no third party communications are in progress in order to prevent such communications from being destroyed.

3. Write to IICRSVn only when the operation is stopped (IICEn = 0).

Remarks 1. STTn: Bit 1 of IICA control register n0 (IICCTLn0)
IICEn: Bit 7 of IICA control register n0 (IICCTLn0)

2. n = 0

14.3.5 IICA control register n1 (IICCTLn1)

This register is used to set the operation mode of I²C and detect the statuses of the SCLAn and SDAAn pins.

The IICCTLn1 register can be set by a 1-bit or 8-bit memory manipulation instruction. However, the CLDn and DADn bits are read-only.

Set the IICCTLn1 register, except the WUPn bit, while operation of I²C is disabled (bit 7 (IICEn) of IICA control register n0 (IICCTLn0) is 0).

Reset signal generation clears this register to 00H.

Figure 14-9. Format of IICA Control Register n1 (IICCTLn1) (1/2)

Address: F0231H (IICCTL01), F0239H (IICCTL11) After reset: 00H R/W[Note 1]

Symbol	<7>	6	<5>	<4>	<3>	<2>	1	<0>
IICCTLn1	WUPn	0	CLDn	DADn	SMCn	DFCn	0	PRSn

WUPn	Control of address match wakeup
0	Stops operation of address match wakeup function in STOP mode.
1	Enables operation of address match wakeup function in STOP mode.
To shift to STOP mode when WUPn = 1, execute the STOP instruction at least three f_{MCK} clocks after setting (1) the WUPn bit (see **Figure 14-22 Flow When Setting WUPn = 1**). Clear (0) the WUPn bit after the address has matched or an extension code has been received. The subsequent communication can be entered by the clearing (0) WUPn bit. (The wait must be released and transmit data must be written after the WUPn bit has been cleared (0).) The interrupt timing when the address has matched or when an extension code has been received, while WUPn = 1, is identical to the interrupt timing when WUPn = 0. (A delay of the difference of sampling by the clock will occur.) Furthermore, when WUPn = 1, a stop condition interrupt is not generated even if the SPIEn bit is set to 1.	
Condition for clearing (WUPn = 0)	Condition for setting (WUPn = 1)
● Cleared by instruction (after address match or extension code reception)	● Set by instruction (when the MSTSn, EXCn, and COIn bits are “0”, and the STDn bit also “0” (communication not entered))[Note 2]

Notes 1. Bits 4 and 5 are read-only.

2. The status of the IICA status register n (IICSn) must be checked and the WUPn bit must be set during the period shown below.

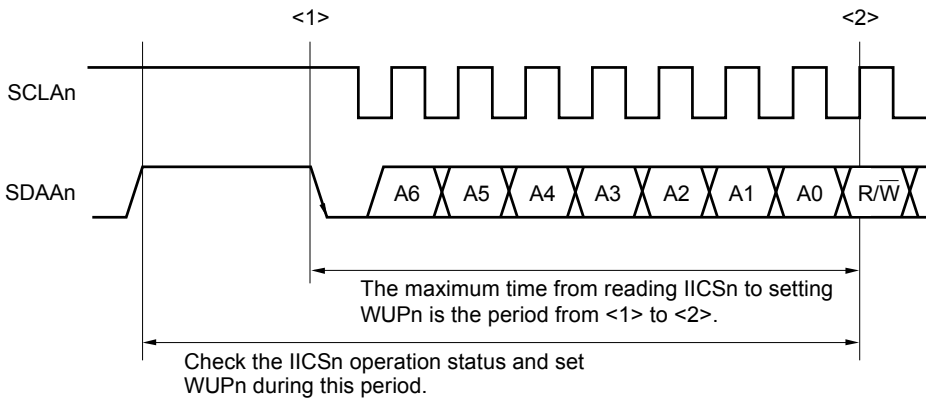

Remark n = 0

Figure 14-9. Format of IICA Control Register n1 (IICCTLn1) (2/2)

CLDn	Detection of SCLAn pin level (valid only when IICEn = 1)
0	The SCLAn pin was detected at low level.
1	The SCLAn pin was detected at high level.
Condition for clearing (CLDn = 0)	Condition for setting (CLDn = 1)
● When the SCLAn pin is at low level ● When IICEn = 0 (operation stop) ● Reset	● When the SCLAn pin is at high level

DADn	Detection of SDAAn pin level (valid only when IICEn = 1)
0	The SDAAn pin was detected at low level.
1	The SDAAn pin was detected at high level.
Condition for clearing (DADn = 0)	Condition for setting (DADn = 1)
● When the SDAAn pin is at low level ● When IICEn = 0 (operation stop) ● Reset	● When the SDAAn pin is at high level

SMCn	Operation mode switching
0	Operates in standard mode (fastest transfer rate: 100 kbps).
1	Operates in fast mode (fastest transfer rate: 400 kbps) or fast mode plus (fastest transfer rate: 1 Mbps).

DFCn	Digital filter operation control
0	Digital filter off.
1	Digital filter on.
Use the digital filter only in fast mode and fast mode plus. The digital filter is used for noise elimination. The transfer clock does not vary, regardless of the DFCn bit being set (1) or cleared (0).	

PRSn	IICA operation clock (f_{MCK}) control
0	Selects f_{CLK} (1 MHz ≤ f_{CLK} ≤ 20 MHz).
1	Selects $f_{CLK}/2$ (20 MHz < f_{CLK}).

Cautions1. The fastest operation frequency of the IICA operation clock (f_{MCK}) is 20 MHz (max.). Set bit 0 (PRSn) of the IICA control register n1 (IICCTLn1) to "1" only when the f_{CLK} exceeds 20 MHz.

2. Note the minimum f_{CLK} operation frequency when setting the transfer clock. The minimum f_{CLK} operation frequency for serial interface IICA is determined according to the mode.
Fast mode: f_{CLK} = 3.5 MHz (min.)
Fast mode plus: f_{CLK} = 10 MHz (min.)
Normal mode: f_{CLK} = 1 MHz (min.)

Remarks 1. IICEn: Bit 7 of IICA control register n0 (IICCTLn0)
2. n = 0

14.3.6 IICA low-level width setting register n (IICWLn)

This register is used to set the low-level width (t_{LOW}) of the SCLAn pin signal that is output by serial interface IICA and to control the SDAAn pin signal.

The IICWLn register can be set by an 8-bit memory manipulation instruction.

Set the IICWLn register while operation of I^2C is disabled (bit 7 (IICEn) of IICA control register n0 (IICCTLn0) is 0).

Reset signal generation sets this register to FFH.

For details about setting the IICWLn register, see **14.4.2 Setting transfer clock by using IICWLn and IICWHn registers**.

The data hold time is a quarter of the time specified by IICWLn.

Figure 14-10. Format of IICA Low-Level Width Setting Register n (IICWLn)

Address: F0232H (IICWL0), F023AH (IICWL1) After reset: FFH R/W

Symbol	7	6	5	4	3	2	1	0
IICWLn								

14.3.7 IICA high-level width setting register n (IICWHn)

This register is used to set the high-level width of the SCLAn pin signal that is output by serial interface IICA and to control the SDAAn pin signal.

The IICWHn register can be set by an 8-bit memory manipulation instruction.

Set the IICWHn register while operation of I^2C is disabled (bit 7 (IICEn) of IICA control register n0 (IICCTLn0) is 0).

Reset signal generation sets this register to FFH.

Figure 14-11. Format of IICA High-Level Width Setting Register n (IICWHn)

Address: F0233H (IICWH0), F023BH (IICWH1) After reset: FFH R/W

Symbol	7	6	5	4	3	2	1	0
IICWHn								

Remarks 1. For setting procedures of the transfer clock on master side and of the IICWLn and IICWHn registers on slave side, see **14.4.2 (1)** and **14.4.2 (2)**, respectively.

2. n = 0

14.3.8 Port mode register 6 (PM6)

This register sets the input/output of port 6 in 1-bit units.

When using the P60/SCLA0 pin as clock I/O and the P61/SDAA0 pin as serial data I/O, clear PM60 and PM61, and the output latches of P60 and P61 to 0.

Set the IICEn bit (bit 7 of IICA control register n0 (IICCTLn0)) to 1 before setting the output mode because the P60/SCLA0 and P61/SDAA0 pins output a low level (fixed) when the IICEn bit is 0.

The PM6 register can be set by a 1-bit or 8-bit memory manipulation instruction.

Reset signal generation sets this register to FFH.

Figure 14-12. Format of Port Mode Register 6 (PM6)

Address: FFF26H After reset: FFH R/W

Symbol	7	6	5	4	3	2	1	0
PM6	1	1	1	1	PM63	PM62	PM61	PM60

PM6n	P6n pin I/O mode selection (n = 0 to 3)
0	Output mode (output buffer on)
1	Input mode (output buffer off)

14.4 I²C Bus Mode Functions

14.4.1 Pin configuration

The serial clock pin (SCLAn) and the serial data bus pin (SDAAn) are configured as follows.

(1) SCLAn .... This pin is used for serial clock input and output.
This pin is an N-ch open-drain output for both master and slave devices. Input is Schmitt input.

(2) SDAAn .... This pin is used for serial data input and output.
This pin is an N-ch open-drain output for both master and slave devices. Input is Schmitt input.

Since outputs from the serial clock line and the serial data bus line are N-ch open-drain outputs, an external pull-up resistor is required.

Figure 14-13. Pin Configuration Diagram

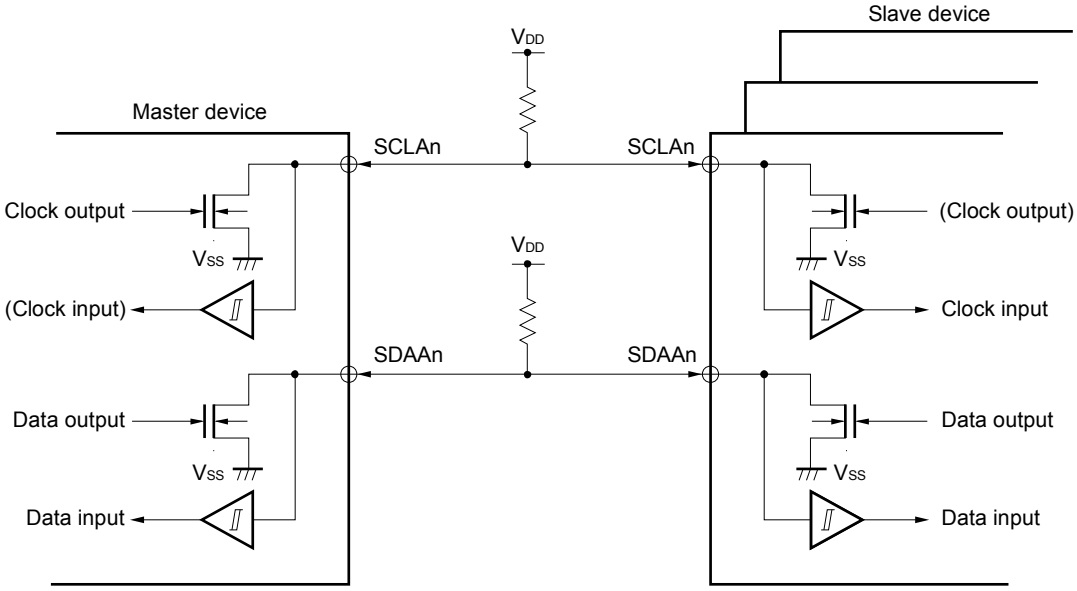

Remark n = 0

14.4.2 Setting transfer clock by using IICWLn and IICWHn registers

(1) Setting transfer clock on master side

$$\text{Transfer clock} = \frac{f_{MCK}}{IICWL + IICWH + f_{MCK}(t_R + t_F)}$$

At this time, the optimal setting values of the IICWLn and IICWHn registers are as follows.
(The fractional parts of all setting values are rounded up.)

● When the fast mode

$$IICWLn = \frac{0.52}{\text{Transfer clock}} \times f_{MCK}$$
$$IICWHn = \left(\frac{0.48}{\text{Transfer clock}} - t_R - t_F\right) \times f_{MCK}$$

● When the normal mode

$$IICWLn = \frac{0.47}{\text{Transfer clock}} \times f_{MCK}$$
$$IICWHn = \left(\frac{0.53}{\text{Transfer clock}} - t_R - t_F\right) \times f_{MCK}$$

● When the fast mode plus

$$IICWLn = \frac{0.50}{\text{Transfer clock}} \times f_{MCK}$$
$$IICWHn = \left(\frac{0.50}{\text{Transfer clock}} - t_R - t_F\right) \times f_{MCK}$$

(2) Setting IICWLn and IICWHn registers on slave side

(The fractional parts of all setting values are truncated.)

● When the fast mode

$$IICWLn = 1.3\ \mu s \times f_{MCK}$$
$$IICWHn = (1.2\ \mu s - t_R - t_F) \times f_{MCK}$$

● When the normal mode

$$IICWLn = 4.7\ \mu s \times f_{MCK}$$
$$IICWHn = (5.3\ \mu s - t_R - t_F) \times f_{MCK}$$

● When the fast mode plus

$$IICWLn = 0.50\ \mu s \times f_{MCK}$$
$$IICWHn = (0.50\ \mu s - t_R - t_F) \times f_{MCK}$$

(**Caution** and **Remarks** are listed on the next page.)

Cautions1. The fastest operation frequency of the IICA operation clock (f_{MCK}) is 20 MHz (max.). Set bit 0 (PRSn) of the IICA control register n1 (IICCTLn1) to "1" only when the f_{CLK} exceeds 20 MHz.

2. Note the minimum f_{CLK} operation frequency when setting the transfer clock. The minimum f_{CLK} operation frequency for serial interface IICA is determined according to the mode.
Fast mode: f_{CLK} = 3.5 MHz (min.)
Fast mode plus: f_{CLK} = 10 MHz (min.)
Normal mode: f_{CLK} = 1 MHz (min.)

Remarks 1. Calculate the rise time (t_R) and fall time (t_F) of the SDAAn and SCLAn signals separately, because they differ depending on the pull-up resistance and wire load.

2. IICWLn: IICA low-level width setting register n
IICWHn: IICA high-level width setting register n
t_F: SDAAn and SCLAn signal falling times
t_R: SDAAn and SCLAn signal rising times
f_{MCK}: IICA operation clock frequency

3. n = 0

14.5 I²C Bus Definitions and Control Methods

The following section describes the I²C bus's serial data communication format and the signals used by the I²C bus. Figure 14-14 shows the transfer timing for the "start condition", "address", "data", and "stop condition" output via the I²C bus's serial data bus.

Figure 14-14. I²C Bus Serial Data Transfer Timing

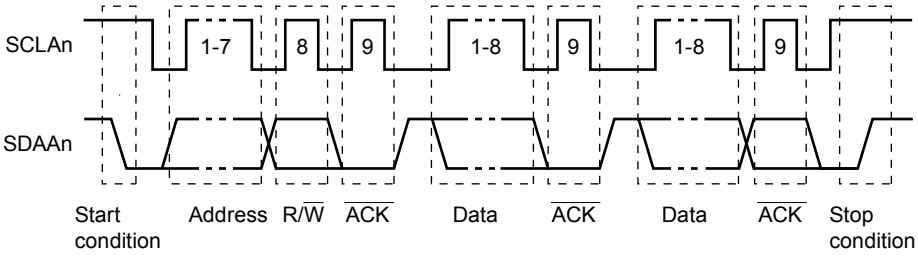

The master device generates the start condition, slave address, and stop condition.
The acknowledge ($\overline{ACK}$) can be generated by either the master or slave device (normally, it is output by the device that receives 8-bit data).

The serial clock (SCLAn) is continuously output by the master device. However, in the slave device, the SCLAn pin low level period can be extended and a wait can be inserted.

14.5.1 Start conditions

A start condition is met when the SCLAn pin is at high level and the SDAAn pin changes from high level to low level. The start conditions for the SCLAn pin and SDAAn pin are signals that the master device generates to the slave device when starting a serial transfer. When the device is used as a slave, start conditions can be detected.

Figure 14-15. Start Conditions

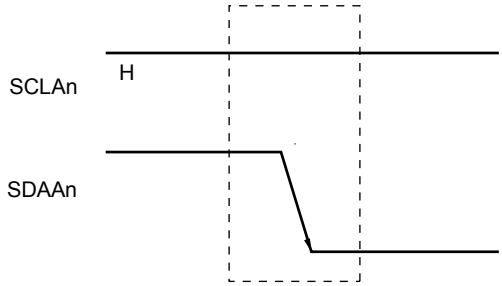

A start condition is output when bit 1 (STTn) of IICA control register n0 (IICCTLn0) is set (1) after a stop condition has been detected (SPDn: Bit 0 of the IICA status register n (IICSn) = 1). When a start condition is detected, bit 1 (STDn) of the IICSn register is set (1).

Remark n = 0

14.5.2 Addresses

The address is defined by the 7 bits of data that follow the start condition.

An address is a 7-bit data segment that is output in order to select one of the slave devices that are connected to the master device via the bus lines. Therefore, each slave device connected via the bus lines must have a unique address.

The slave devices include hardware that detects the start condition and checks whether or not the 7-bit address data matches the data values stored in the slave address register n (SVAn). If the address data matches the SVAn register values, the slave device is selected and communicates with the master device until the master device generates a start condition or stop condition.

Figure 14-16. Address

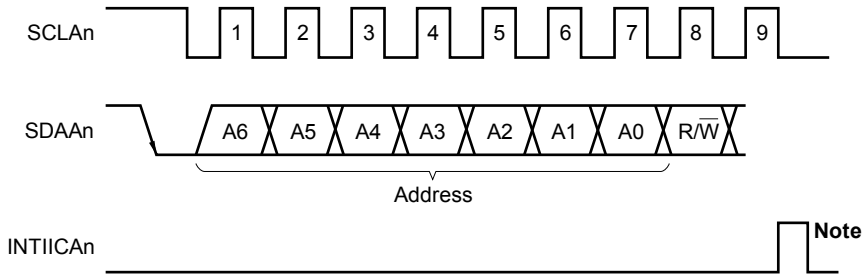

Note INTIICAn is not issued if data other than a local address or extension code is received during slave device operation.

Addresses are output when a total of 8 bits consisting of the slave address and the transfer direction described in **14.5.3 Transfer direction specification** are written to the IICA shift register n (IICAn). The received addresses are written to the IICAn register.

The slave address is assigned to the higher 7 bits of the IICAn register.

14.5.3 Transfer direction specification

In addition to the 7-bit address data, the master device sends 1 bit that specifies the transfer direction.

When this transfer direction specification bit has a value of “0”, it indicates that the master device is transmitting data to a slave device. When the transfer direction specification bit has a value of “1”, it indicates that the master device is receiving data from a slave device.

Figure 14-17. Transfer Direction Specification

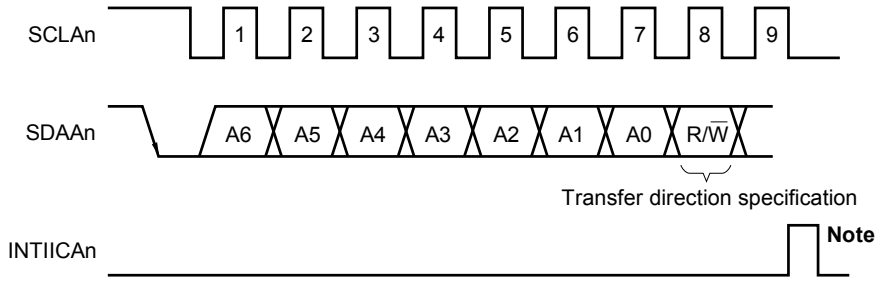

Note INTIICAn is not issued if data other than a local address or extension code is received during slave device operation.

Remark n = 0

14.5.4 Acknowledge ($\overline{\text{ACK}}$)

$\overline{\text{ACK}}$ is used to check the status of serial data at the transmission and reception sides.

The reception side returns $\overline{\text{ACK}}$ each time it has received 8-bit data.

The transmission side usually receives $\overline{\text{ACK}}$ after transmitting 8-bit data. When $\overline{\text{ACK}}$ is returned from the reception side, it is assumed that reception has been correctly performed and processing is continued. Whether $\overline{\text{ACK}}$ has been detected can be checked by using bit 2 (ACKDn) of the IICA status register n (IICSn).

When the master receives the last data item, it does not return $\overline{\text{ACK}}$ and instead generates a stop condition. If a slave does not return $\overline{\text{ACK}}$ after receiving data, the master outputs a stop condition or restart condition and stops transmission. If $\overline{\text{ACK}}$ is not returned, the possible causes are as follows.

<1> Reception was not performed normally.
<2> The final data item was received.
<3> The reception side specified by the address does not exist.

To generate $\overline{\text{ACK}}$, the reception side makes the SDAAn line low at the ninth clock (indicating normal reception).

Automatic generation of $\overline{\text{ACK}}$ is enabled by setting bit 2 (ACKEn) of IICA control register n0 (IICCTLn0) to 1. Bit 3 (TRCn) of the IICSn register is set by the data of the eighth bit that follows 7-bit address information. Usually, set the ACKEn bit to 1 for reception (TRCn = 0).

If a slave can receive no more data during reception (TRCn = 0) or does not require the next data item, then the slave must inform the master, by clearing the ACKEn bit to 0, that it will not receive any more data.

When the master does not require the next data item during reception (TRCn = 0), it must clear the ACKEn bit to 0 so that $\overline{\text{ACK}}$ is not generated. In this way, the master informs a slave at the transmission side that it does not require any more data (transmission will be stopped).

Figure 14-18. $\overline{\text{ACK}}$

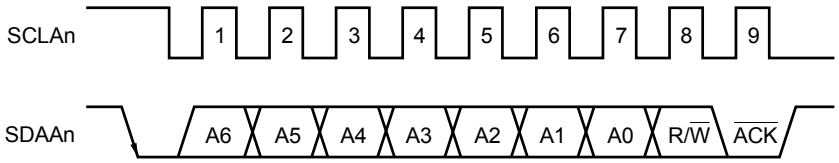

When the local address is received, $\overline{\text{ACK}}$ is automatically generated, regardless of the value of the ACKEn bit. When an address other than that of the local address is received, $\overline{\text{ACK}}$ is not generated (NACK).

When an extension code is received, $\overline{\text{ACK}}$ is generated if the ACKEn bit is set to 1 in advance.

How $\overline{\text{ACK}}$ is generated when data is received differs as follows depending on the setting of the wait timing.

- When 8-clock wait state is selected (bit 3 (WTIMn) of IICCTLn0 register = 0):
  By setting the ACKEn bit to 1 before releasing the wait state, $\overline{\text{ACK}}$ is generated at the falling edge of the eighth clock of the SCLAn pin.
- When 9-clock wait state is selected (bit 3 (WTIMn) of IICCTLn0 register = 1):
  $\overline{\text{ACK}}$ is generated by setting the ACKEn bit to 1 in advance.

Remark n = 0

14.5.5 Stop condition

When the SCLAn pin is at high level, changing the SDAAn pin from low level to high level generates a stop condition.

A stop condition is a signal that the master device generates to the slave device when serial transfer has been completed. When the device is used as a slave, stop conditions can be detected.

Figure 14-19. Stop Condition

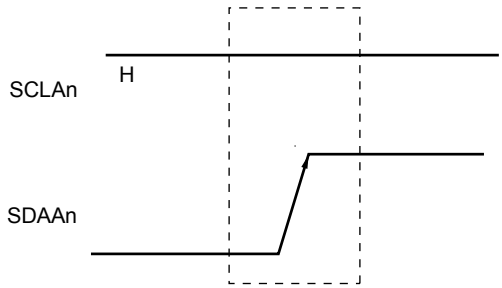

A stop condition is generated when bit 0 (SPTn) of IICA control register n0 (IICCTLn0) is set to 1. When the stop condition is detected, bit 0 (SPDn) of the IICA status register n (IICSn) is set to 1 and INTIICAn is generated when bit 4 (SPIEn) of the IICCTLn0 register is set to 1.

Remark n = 0

14.5.6 Wait

The wait is used to notify the communication partner that a device (master or slave) is preparing to transmit or receive data (i.e., is in a wait state).

Setting the SCLAn pin to low level notifies the communication partner of the wait state. When wait state has been canceled for both the master and slave devices, the next data transfer can begin.

Figure 14-20. Wait (1/2)

(a) When master device has a nine-clock wait and slave device has an eight-clock wait (master transmits, slave receives, and ACKEn = 1)

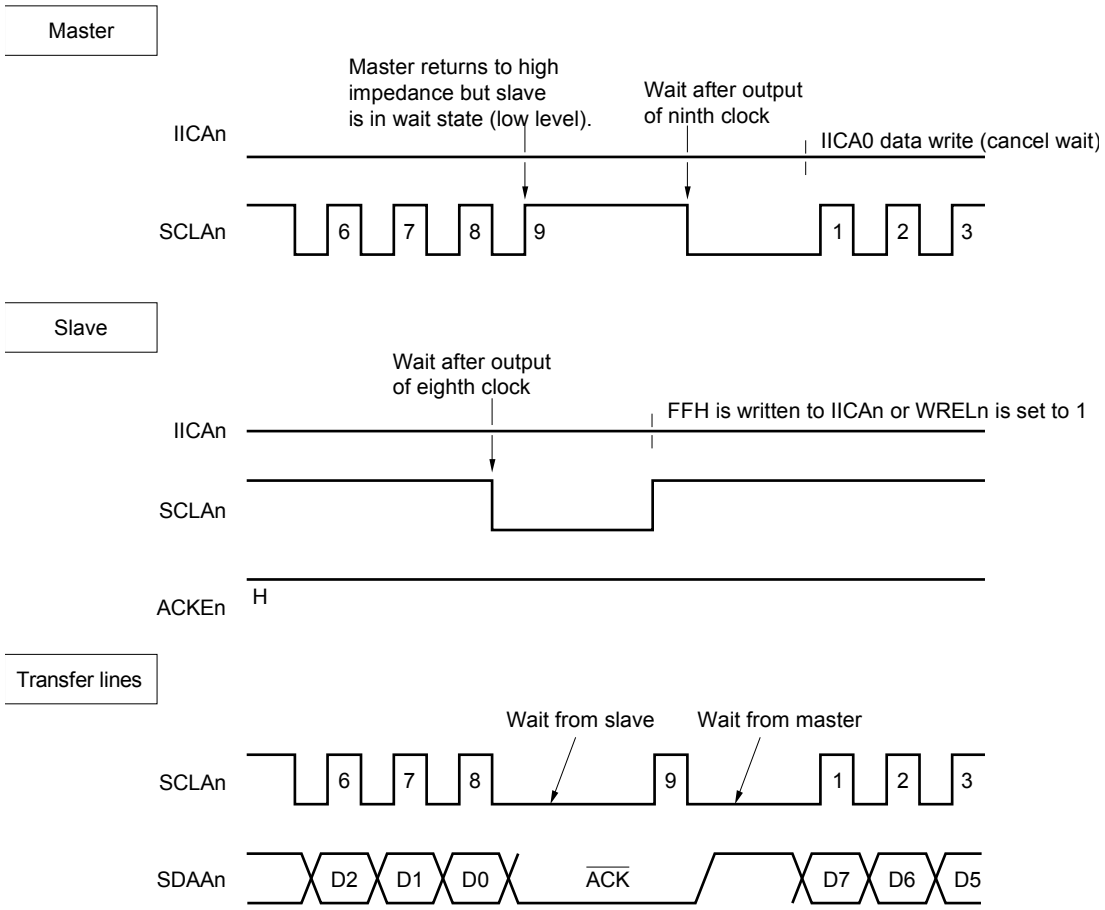

Remark n = 0

Figure 14-20. Wait (2/2)

(b) When master and slave devices both have a nine-clock wait (master transmits, slave receives, and ACKEn = 1)

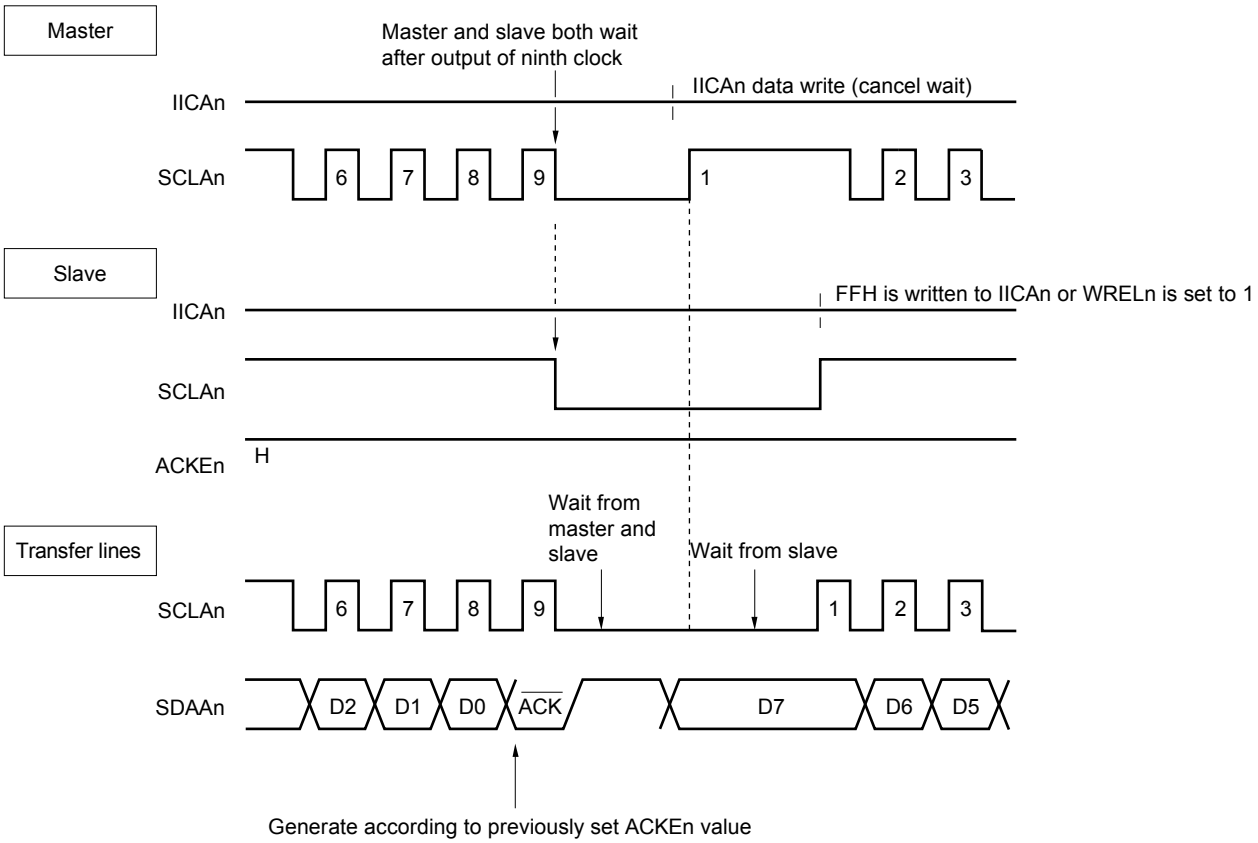

Remark ACKEn: Bit 2 of IICA control register n0 (IICCTLn0)
WRELn: Bit 5 of IICA control register n0 (IICCTLn0)

A wait may be automatically generated depending on the setting of bit 3 (WTIMn) of IICA control register n0 (IICCTLn0).

Normally, the receiving side cancels the wait state when bit 5 (WRELn) of the IICCTLn0 register is set to 1 or when FFH is written to the IICA shift register n (IICAn), and the transmitting side cancels the wait state when data is written to the IICAn register.

The master device can also cancel the wait state via either of the following methods.

- By setting bit 1 (STTn) of the IICCTLn0 register to 1
- By setting bit 0 (SPTn) of the IICCTLn0 register to 1

Remark n = 0

14.5.7 Canceling wait

The I^2C usually cancels a wait state by the following processing.

- Writing data to the IICA shift register n (IICAn)
- Setting bit 5 (WRELn) of IICA control register n0 (IICCTLn0) (canceling wait)
- Setting bit 1 (STTn) of the IICCTLn0 register (generating start condition)[Note]
- Setting bit 0 (SPTn) of the IICCTLn0 register (generating stop condition)[Note]

Note Master only

When the above wait canceling processing is executed, the I^2C cancels the wait state and communication is resumed.

To cancel a wait state and transmit data (including addresses), write the data to the IICAn register.

To receive data after canceling a wait state, or to complete data transmission, set bit 5 (WRELn) of the IICCTLn0 register to 1.

To generate a restart condition after canceling a wait state, set bit 1 (STTn) of the IICCTLn0 register to 1.

To generate a stop condition after canceling a wait state, set bit n (SPTn) of the IICCTLn0 register to 1.

Execute the canceling processing only once for one wait state.

If, for example, data is written to the IICAn register after canceling a wait state by setting the WRELn bit to 1, an incorrect value may be output to SDAAn line because the timing for changing the SDAAn line conflicts with the timing for writing the IICAn register.

In addition to the above, communication is stopped if the IICEn bit is cleared to 0 when communication has been aborted, so that the wait state can be canceled.

If the I^2C bus has deadlocked due to noise, processing is saved from communication by setting bit 6 (LRELn) of the IICCTLn0 register, so that the wait state can be canceled.

Caution If a processing to cancel a wait state is executed when WUPn = 1, the wait state will not be canceled.

Remark n = 0

14.5.8 Interrupt request (INTIICAn) generation timing and wait control

The setting of bit 3 (WTIMn) of IICA control register n0 (IICCTLn0) determines the timing by which INTIICAn is generated and the corresponding wait control, as shown in Table 14-2.

Table 14-2. INTIICAn Generation Timing and Wait Control

WTIMn	During Slave Device Operation			During Master Device Operation		
	Address	Data Reception	Data Transmission	Address	Data Reception	Data Transmission
0	9 Notes 1, 2	8 Note 2	8 Note 2	9	8	8
1	9 Notes 1, 2	9 Note 2	9 Note 2	9	9	9

Notes 1. The slave device's INTIICAn signal and wait period occurs at the falling edge of the ninth clock only when there is a match with the address set to the slave address register n (SVAn).
At this point, $\overline{\text{ACK}}$ is generated regardless of the value set to the IICCTLn0 register's bit 2 (ACKEn). For a slave device that has received an extension code, INTIICAn occurs at the falling edge of the eighth clock.
However, if the address does not match after restart, INTIICAn is generated at the falling edge of the 9th clock, but wait does not occur.

2. If the received address does not match the contents of the slave address register n (SVAn) and extension code is not received, neither INTIICAn nor a wait occurs.

Remark The numbers in the table indicate the number of the serial clock's clock signals. Interrupt requests and wait control are both synchronized with the falling edge of these clock signals.

(1) During address transmission/reception

Slave device operation: Interrupt and wait timing are determined depending on the conditions described in Notes 1 and 2 above, regardless of the WTIMn bit.

Master device operation: Interrupt and wait timing occur at the falling edge of the ninth clock regardless of the WTIMn bit.

(2) During data reception

- Master/slave device operation: Interrupt and wait timing are determined according to the WTIMn bit.

(3) During data transmission

- Master/slave device operation: Interrupt and wait timing are determined according to the WTIMn bit.

(4) Wait cancellation method

The four wait cancellation methods are as follows.

- Writing data to the IICA shift register n (IICAn)
- Setting bit 5 (WRELn) of IICA control register n0 (IICCTLn0) (canceling wait)
- Setting bit 1 (STTn) of IICCTLn0 register (generating start condition)Note
- Setting bit 0 (SPTn) of IICCTLn0 register (generating stop condition)Note

Note Master only.

When an 8-clock wait has been selected (WTIMn = 0), the presence/absence of $\overline{\text{ACK}}$ generation must be determined prior to wait cancellation.

(5) Stop condition detection

INTIICAn is generated when a stop condition is detected (only when SPIEn = 1).

Remark n = 0

14.5.9 Address match detection method

In I²C bus mode, the master device can select a particular slave device by transmitting the corresponding slave address.

Address match can be detected automatically by hardware. An interrupt request (INTIICAn) occurs when the address set to the slave address register n (SVAn) matches the slave address sent by the master device, or when an extension code has been received.

14.5.10 Error detection

In I²C bus mode, the status of the serial data bus (SDAAn) during data transmission is captured by the IICA shift register n (IICAn) of the transmitting device, so the IICA data prior to transmission can be compared with the transmitted IICA data to enable detection of transmission errors. A transmission error is judged as having occurred when the compared data values do not match.

14.5.11 Extension code

(1) When the higher 4 bits of the receive address are either “0000” or “1111”, the extension code reception flag (EXCn) is set to 1 for extension code reception and an interrupt request (INTIICAn) is issued at the falling edge of the eighth clock. The local address stored in the slave address register n (SVAn) is not affected.

(2) The settings below are specified if 11110xx0 is transferred from the master by using a 10-bit address transfer when the SVAn register is set to 11110xx0. Note that INTIICAn occurs at the falling edge of the eighth clock.

- Higher four bits of data match: EXCn = 1
- Seven bits of data match: COIn = 1

Remark EXCn: Bit 5 of IICA status register n (IICSn)
COIn: Bit 4 of IICA status register n (IICSn)

(3) Since the processing after the interrupt request occurs differs according to the data that follows the extension code, such processing is performed by software.
If the extension code is received while a slave device is operating, then the slave device is participating in communication even if its address does not match.
For example, after the extension code is received, if you do not wish to operate the target device as a slave device, set bit 6 (LRELn) of IICA control register n0 (IICCTLn0) to 1 to set the standby mode for the next communication operation.

Table 14-3. Bit Definitions of Major Extension Codes

Slave Address	R/W Bit	Description
0 0 0 0 0 0 0	0	General call address
1 1 1 1 0 x x	0	10-bit slave address specification (during address authentication)
1 1 1 1 0 x x	1	10-bit slave address specification (after address match, when read command is issued)

Remarks 1. See the I²C bus specifications issued by NXP Semiconductors for details of extension codes other than those described above.
2. n = 0

14.5.12 Arbitration

When several master devices simultaneously generate a start condition (when the STTn bit is set to 1 before the STDn bit is set to 1), communication among the master devices is performed as the number of clocks are adjusted until the data differs. This kind of operation is called arbitration.

When one of the master devices loses in arbitration, an arbitration loss flag (ALDn) in the IICA status register n (IICSn) is set (1) via the timing by which the arbitration loss occurred, and the SCLAn and SDAAn lines are both set to high impedance, which releases the bus.

The arbitration loss is detected based on the timing of the next interrupt request (the eighth or ninth clock, when a stop condition is detected, etc.) and the ALDn = 1 setting that has been made by software.

For details of interrupt request timing, see **14.5.8 Interrupt request (INTIICAn) generation timing and wait control**.

Remark STDn: Bit 1 of IICA status register n (IICSn)
STTn: Bit 1 of IICA control register n0 (IICCTLn0)

Figure 14-21. Arbitration Timing Example

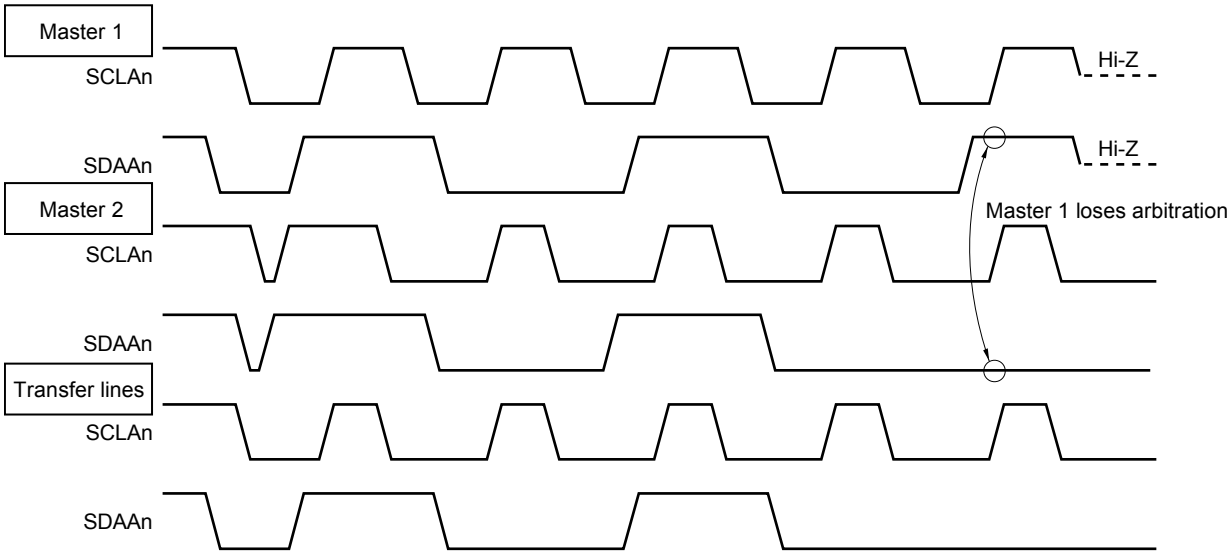

Remark n = 0

Table 14-4. Status During Arbitration and Interrupt Request Generation Timing

Status During Arbitration	Interrupt Request Generation Timing
During address transmission	At falling edge of eighth or ninth clock following byte transfer[Note 1]
Read/write data after address transmission	
During extension code transmission	
Read/write data after extension code transmission	
During data transmission	
During $\overline{\text{ACK}}$ transfer period after data transmission	
When restart condition is detected during data transfer	
When stop condition is detected during data transfer	When stop condition is generated (when SPIEn = 1)[Note 2]
When data is at low level while attempting to generate a restart condition	At falling edge of eighth or ninth clock following byte transfer[Note 1]
When stop condition is detected while attempting to generate a restart condition	When stop condition is generated (when SPIEn = 1)[Note 2]
When data is at low level while attempting to generate a stop condition	At falling edge of eighth or ninth clock following byte transfer[Note 1]
When SCLAn is at low level while attempting to generate a restart condition	

Notes 1. When the WTIMn bit (bit 3 of IICA control register n0 (IICCTLn0)) = 1, an interrupt request occurs at the falling edge of the ninth clock. When WTIMn = 0 and the extension code's slave address is received, an interrupt request occurs at the falling edge of the eighth clock.

2. When there is a chance that arbitration will occur, set SPIEn = 1 for master device operation.

Remarks 1. SPIEn: Bit 4 of IICA control register n0 (IICCTLn0)

2. n = 0

14.5.13 Wakeup function

The I^2C bus slave function is a function that generates an interrupt request signal (INTIICAn) when a local address and extension code have been received.

This function makes processing more efficient by preventing unnecessary INTIICAn signal from occurring when addresses do not match.

When a start condition is detected, wakeup standby mode is set. This wakeup standby mode is in effect while addresses are transmitted due to the possibility that an arbitration loss may change the master device (which has generated a start condition) to a slave device.

To use the wakeup function in the STOP mode, set the WUPn bit to 1. Addresses can be received regardless of the operation clock. An interrupt request signal (INTIICAn) is also generated when a local address and extension code have been received. Operation returns to normal operation by using an instruction to clear (0) the WUPn bit after this interrupt has been generated.

Figure 14-22 shows the flow for setting WUPn = 1 and Figure 14-23 shows the flow for setting WUPn = 0 upon an address match.

Figure 14-22. Flow When Setting WUPn = 1

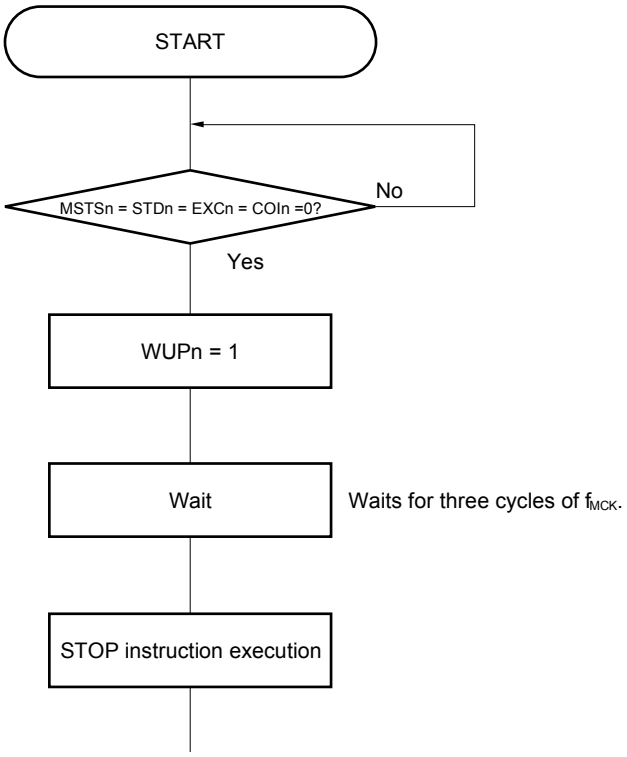

Remark n = 0

Figure 14-23. Flow When Setting WUPn = 0 upon Address Match (Including Extension Code Reception)

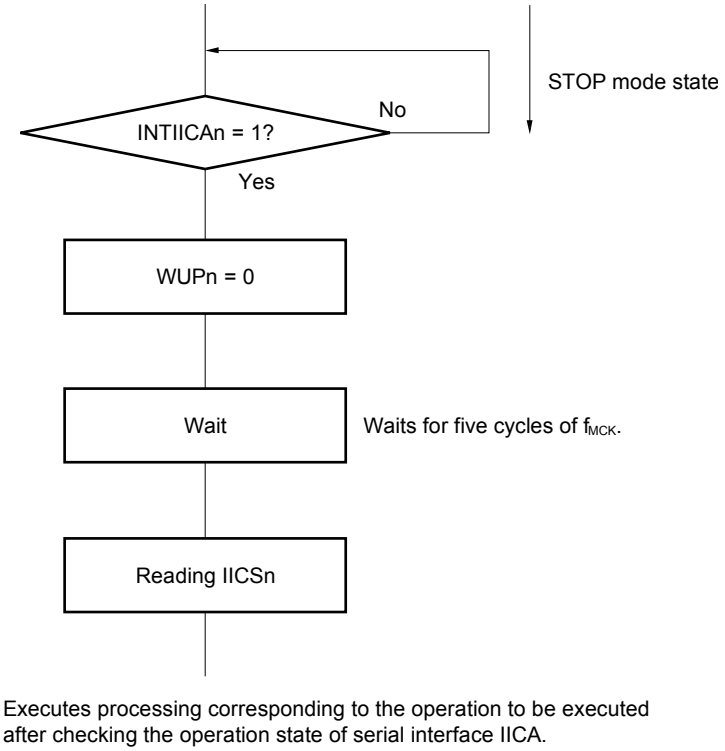

Use the following flows to perform the processing to release the STOP mode other than by an interrupt request (INTIICAn) generated from serial interface IICA.

- When operating next IIC communication as master: Flow shown in Figure 14-24.
- When operating next IIC communication as slave
  When released by INTIICAn interrupt: Same as the flow in Figure 14-23.
  When released by other than INTIICAn interrupt: Wait for INTIICAn interrupt with WUPn left set to 1.

Remark n = 0

Figure 14-24. When Operating as Master Device after Releasing STOP Mode other than by INTIICAn

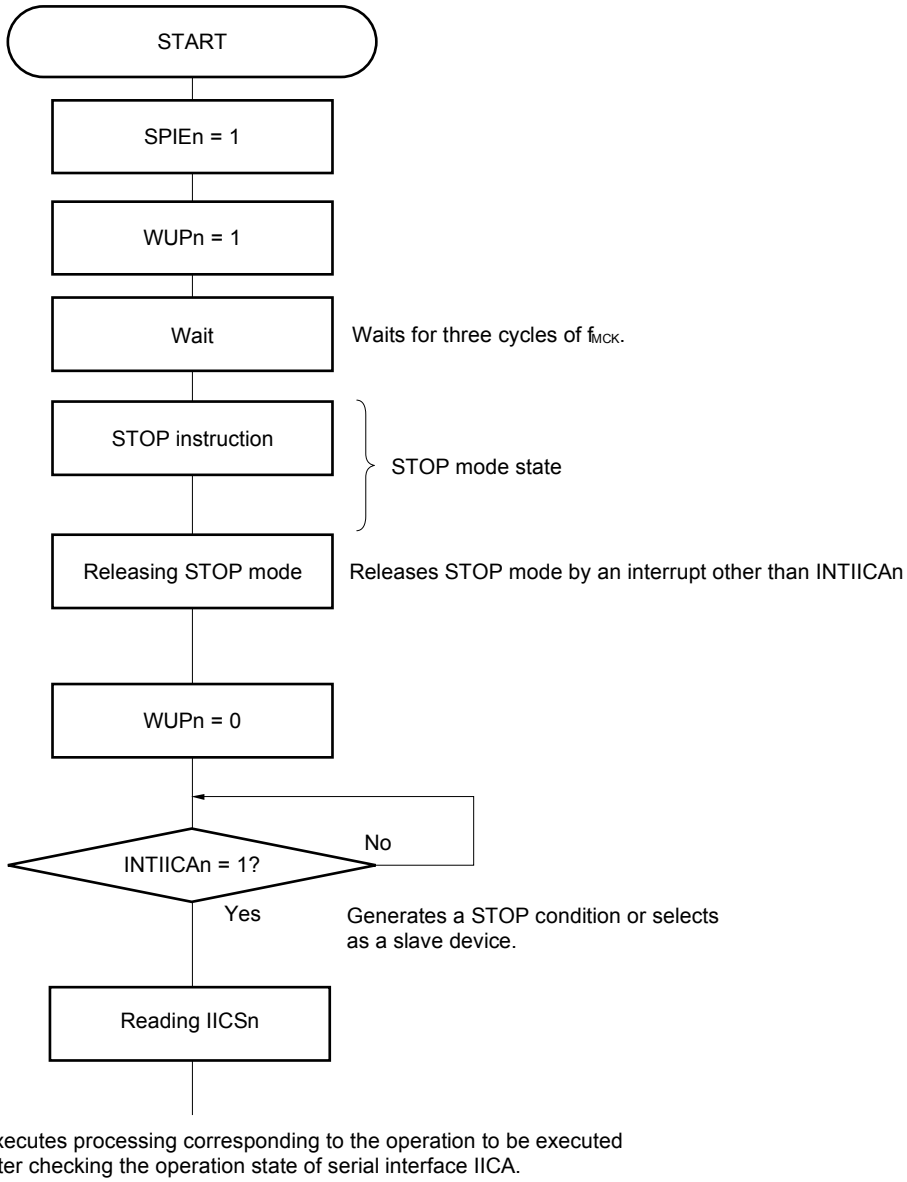

Remark n = 0

14.5.14 Communication reservation

(1) When communication reservation function is enabled (bit n (IICRSVn) of IICA flag register n (IICFn) = 0)

To start master device communications when not currently using a bus, a communication reservation can be made to enable transmission of a start condition when the bus is released. There are two modes under which the bus is not used.

- When arbitration results in neither master nor slave operation
- When an extension code is received and slave operation is disabled ($\overline{\text{ACK}}$ is not returned and the bus was released by setting bit 6 (LRELn) of IICA control register n0 (IICCTLn0) to 1 and saving communication).

If bit 1 (STTn) of the IICCTLn0 register is set to 1 while the bus is not used (after a stop condition is detected), a start condition is automatically generated and wait state is set.
If an address is written to the IICA shift register n (IICAn) after bit 4 (SPIEn) of the IICCTLn0 register was set to 1, and it was detected by generation of an interrupt request signal (INTIICAn) that the bus was released (detection of the stop condition), then the device automatically starts communication as the master. Data written to the IICAn register before the stop condition is detected is invalid.
When the STTn bit has been set to 1, the operation mode (as start condition or as communication reservation) is determined according to the bus status.

- If the bus has been released .....a start condition is generated
- If the bus has not been released (standby mode) ....communication reservation

Check whether the communication reservation operates or not by using the MSTSn bit (bit 7 of the IICA status register n (IICSn)) after the STTn bit is set to 1 and the wait time elapses.
Use software to secure the wait time calculated by the following expression.

Wait time from setting STTn = 1 to checking the MSTSn flag: (IICWLn setting value + IICWHn setting value + 4)/f_{MCK}+ t_F × 2

Remarks 1. IICWLn: IICA low-level width setting register n
IICWHn: IICA high-level width setting register n
t_F: SDAAn and SCLAn signal falling times
f_{MCK}: IICA operation clock frequency

2. n = 0

Figure 14-25 shows the communication reservation timing.

Figure 14-25. Communication Reservation Timing

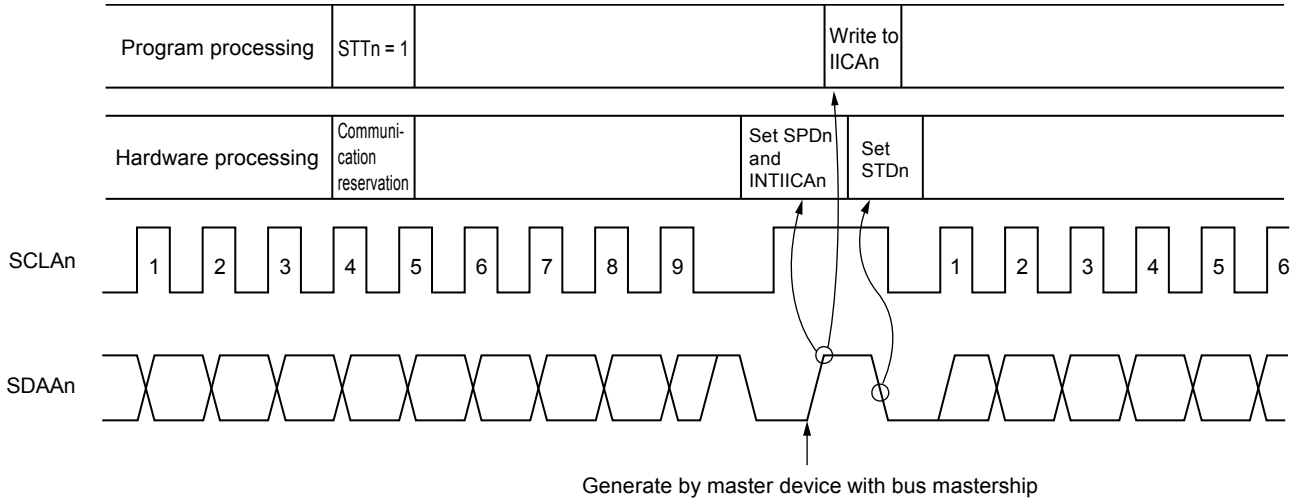

Remark IICAn: IICA shift register n
STTn: Bit 1 of IICA control register n0 (IICCTLn0)
STDn: Bit 1 of IICA status register n (IICSn)
SPDn: Bit 0 of IICA status register n (IICSn)

Communication reservations are accepted via the timing shown in Figure 14-26. After bit 1 (STDn) of the IICA status register n (IICSn) is set to 1, a communication reservation can be made by setting bit 1 (STTn) of IICA control register n0 (IICCTLn0) to 1 before a stop condition is detected.

Figure 14-26. Timing for Accepting Communication Reservations

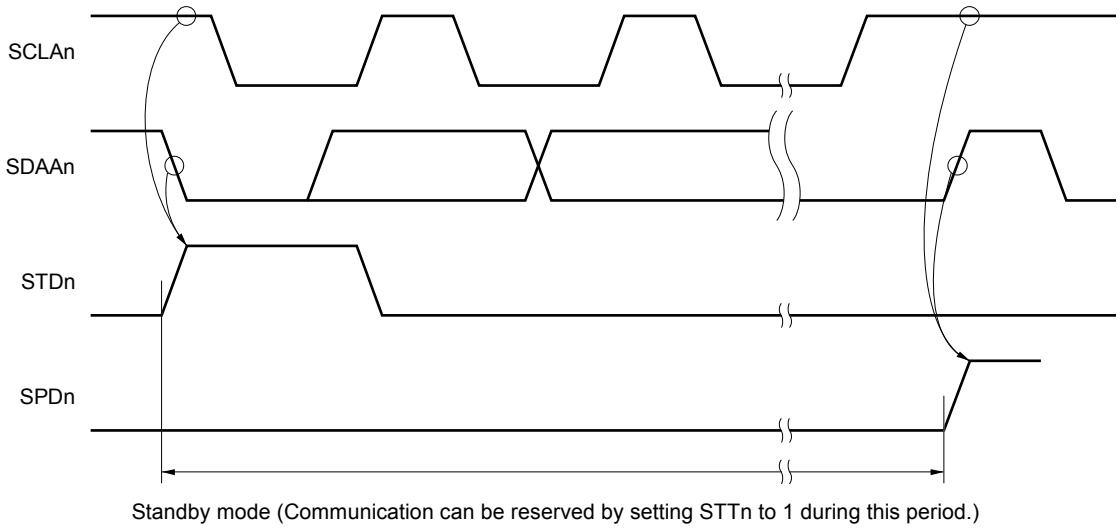

Remark n = 0

Figure 14-27 shows the communication reservation protocol.

Figure 14-27. Communication Reservation Protocol

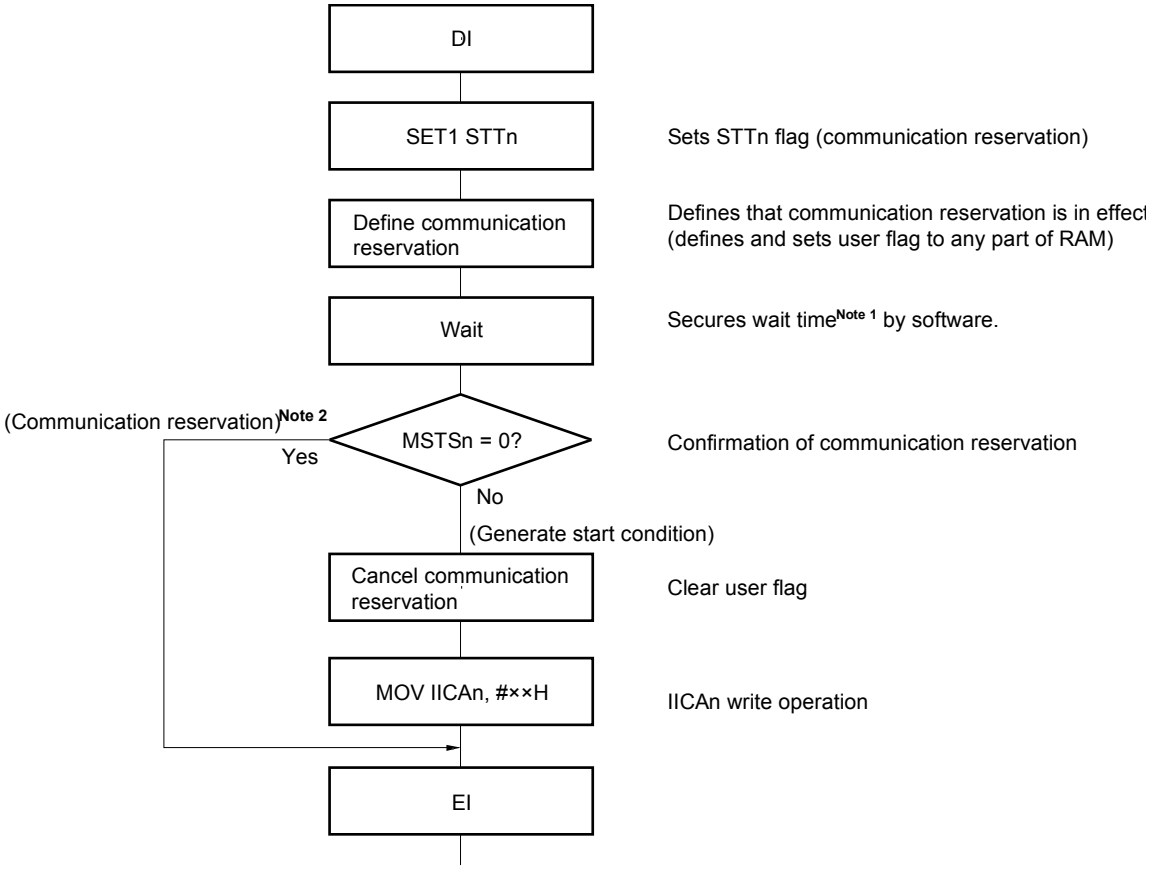

Notes 1. The wait time is calculated as follows.
(IICWLn setting value + IICWHn setting value + 4)/f_{MCK}+ t_F × 2

2. The communication reservation operation executes a write to the IICA shift register n (IICAn) when a stop condition interrupt request occurs.

Remarks 1. STTn: Bit 1 of IICA control register n0 (IICCTLn0)
MSTSn: Bit 7 of IICA status register n (IICSn)
IICAn: IICA shift register n
IICWLn: IICA low-level width setting register n
IICWHn: IICA high-level width setting register n
t_F: SDAAn and SCLAn signal falling times
f_{MCK}: IICA operation clock frequency

2. n = 0

(2) When communication reservation function is disabled (bit 0 (IICRSVn) of IICA flag register n (IICFn) = 1)

When bit 1 (STTn) of IICA control register n0 (IICCTLn0) is set to 1 when the bus is not used in a communication during bus communication, this request is rejected and a start condition is not generated. The following two statuses are included in the status where bus is not used.

- When arbitration results in neither master nor slave operation
- When an extension code is received and slave operation is disabled (ACK is not returned and the bus was released by setting bit 6 (LRELn) of the IICCTLn0 register to 1 and saving communication)

To confirm whether the start condition was generated or request was rejected, check STCFn (bit 7 of the IICFn register). It takes up to 5 f_{MCK} clocks until the STCFn bit is set to 1 after setting STTn = 1. Therefore, secure the time by software.

Remark n = 0

14.5.15 Cautions

(1) When STCENn = 0

Immediately after I^2C operation is enabled (IICEn = 1), the bus communication status (IICBSYn = 1) is recognized regardless of the actual bus status. When changing from a mode in which no stop condition has been detected to a master device communication mode, first generate a stop condition to release the bus, then perform master device communication.

When using multiple masters, it is not possible to perform master device communication when the bus has not been released (when a stop condition has not been detected).

Use the following sequence for generating a stop condition.

<1> Set IICA control register n1 (IICCTLn1).
<2> Set bit 7 (IICEn) of IICA control register n0 (IICCTLn0) to 1.
<3> Set bit 0 (SPTn) of the IICCTLn0 register to 1.

(2) When STCENn = 1

Immediately after I^2C operation is enabled (IICEn = 1), the bus released status (IICBSYn = 0) is recognized regardless of the actual bus status. To generate the first start condition (STTn = 1), it is necessary to confirm that the bus has been released, so as to not disturb other communications.

(3) If other I^2C communications are already in progress

If I^2C operation is enabled and the device participates in communication already in progress when the SDAAn pin is low and the SCLAn pin is high, the macro of I^2C recognizes that the SDAAn pin has gone low (detects a start condition). If the value on the bus at this time can be recognized as an extension code, $\overline{ACK}$ is returned, but this interferes with other I^2C communications. To avoid this, start I^2C in the following sequence.

<1> Clear bit 4 (SPIEn) of the IICCTLn0 register to 0 to disable generation of an interrupt request signal (INTIICAn) when the stop condition is detected.
<2> Set bit 7 (IICEn) of the IICCTLn0 register to 1 to enable the operation of I^2C.
<3> Wait for detection of the start condition.
<4> Set bit 6 (LRELn) of the IICCTLn0 register to 1 before $\overline{ACK}$ is returned (4 to 72 f_{MCK} clocks after setting the IICEn bit to 1), to forcibly disable detection.

(4) Setting the STTn and SPTn bits (bits 1 and 0 of the IICCTLn0 register) again after they are set and before they are cleared to 0 is prohibited.

(5) When transmission is reserved, set the SPIEn bit (bit 4 of the IICCTLn0 register) to 1 so that an interrupt request is generated when the stop condition is detected. Transfer is started when communication data is written to the IICA shift register n (IICAn) after the interrupt request is generated. Unless the interrupt is generated when the stop condition is detected, the device stops in the wait state because the interrupt request is not generated when communication is started. However, it is not necessary to set the SPIEn bit to 1 when the MSTSn bit (bit 7 of the IICA status register n (IICSn)) is detected by software.

Remark n = 0

14.5.16 Communication operations

The following shows three operation procedures with the flowchart.

(1) Master operation in single master system

The flowchart when using the RL78/G1D as the master in a single master system is shown below.

This flowchart is broadly divided into the initial settings and communication processing. Execute the initial settings at startup. If communication with the slave is required, prepare the communication and then execute communication processing.

(2) Master operation in multimaster system

In the I^2C bus multimaster system, whether the bus is released or used cannot be judged by the I^2C bus specifications when the bus takes part in a communication. Here, when data and clock are at a high level for a certain period (1 frame), the RL78/G1D takes part in a communication with bus released state.

This flowchart is broadly divided into the initial settings, communication waiting, and communication processing. The processing when the RL78/G1D looses in arbitration and is specified as the slave is omitted here, and only the processing as the master is shown. Execute the initial settings at startup to take part in a communication. Then, wait for the communication request as the master or wait for the specification as the slave. The actual communication is performed in the communication processing, and it supports the transmission/reception with the slave and the arbitration with other masters.

(3) Slave operation

An example of when the RL78/G1D is used as the I^2C bus slave is shown below.

When used as the slave, operation is started by an interrupt. Execute the initial settings at startup, then wait for the INTIICAn interrupt occurrence (communication waiting). When an INTIICAn interrupt occurs, the communication status is judged and its result is passed as a flag over to the main processing.

By checking the flags, necessary communication processing is performed.

Remark n = 0

(1) Master operation in single-master system

Figure 14-28. Master Operation in Single-Master System

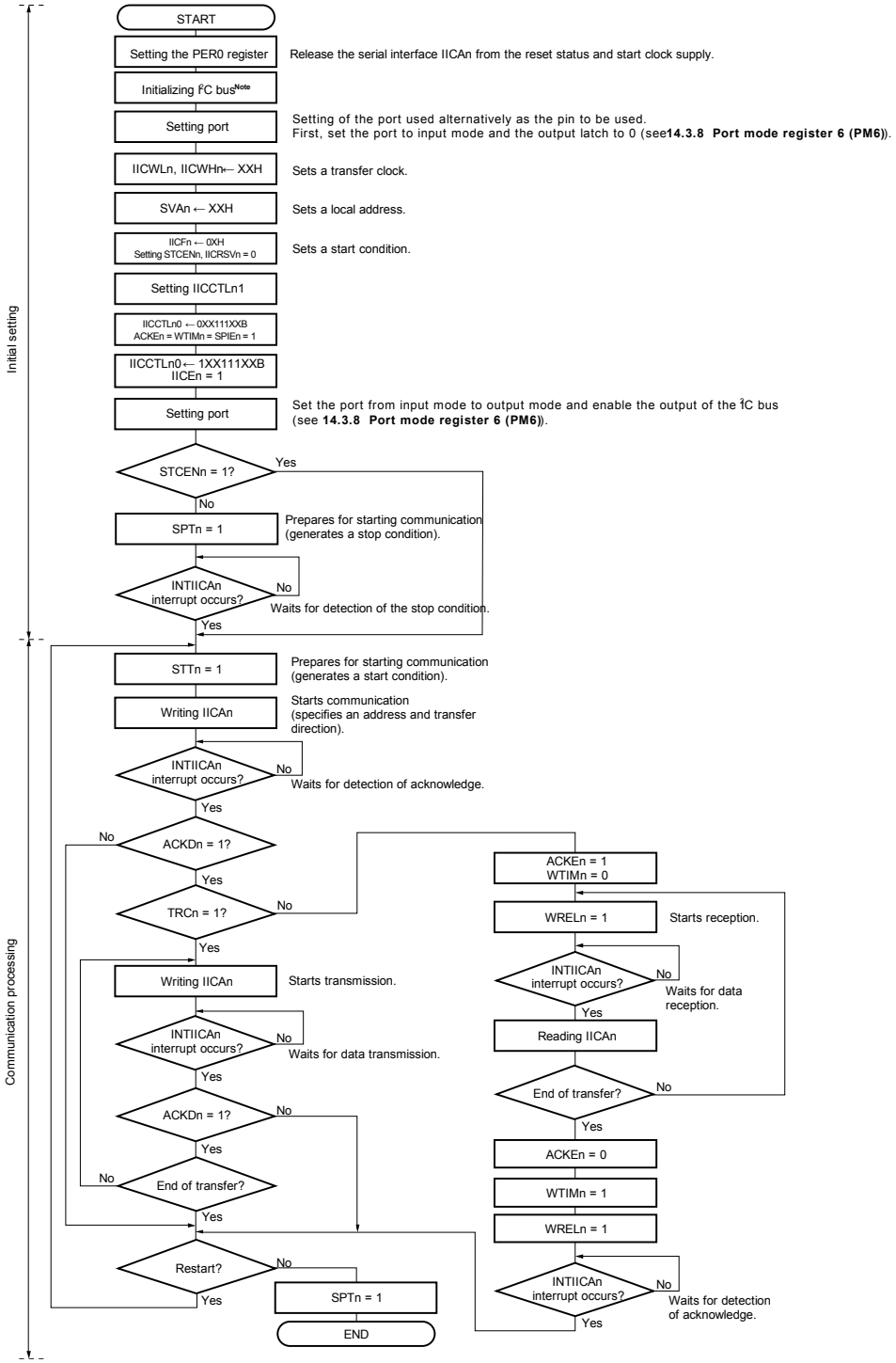

Note Release (SCLAn and SDAAn pins = high level) the I^2C bus in conformance with the specifications of the product that is communicating. If EEPROM is outputting a low level to the SDAAn pin, for example, set the SCLAn pin in the output port mode, and output a clock pulse from the output port until the SDAAn pin is constantly at high level.

Remarks 1. Conform to the specifications of the product that is communicating, with respect to the transmission and reception formats.

2. n = 0

(2) Master operation in multi-master system

Figure 14-29. Master Operation in Multi-Master System (1/3)

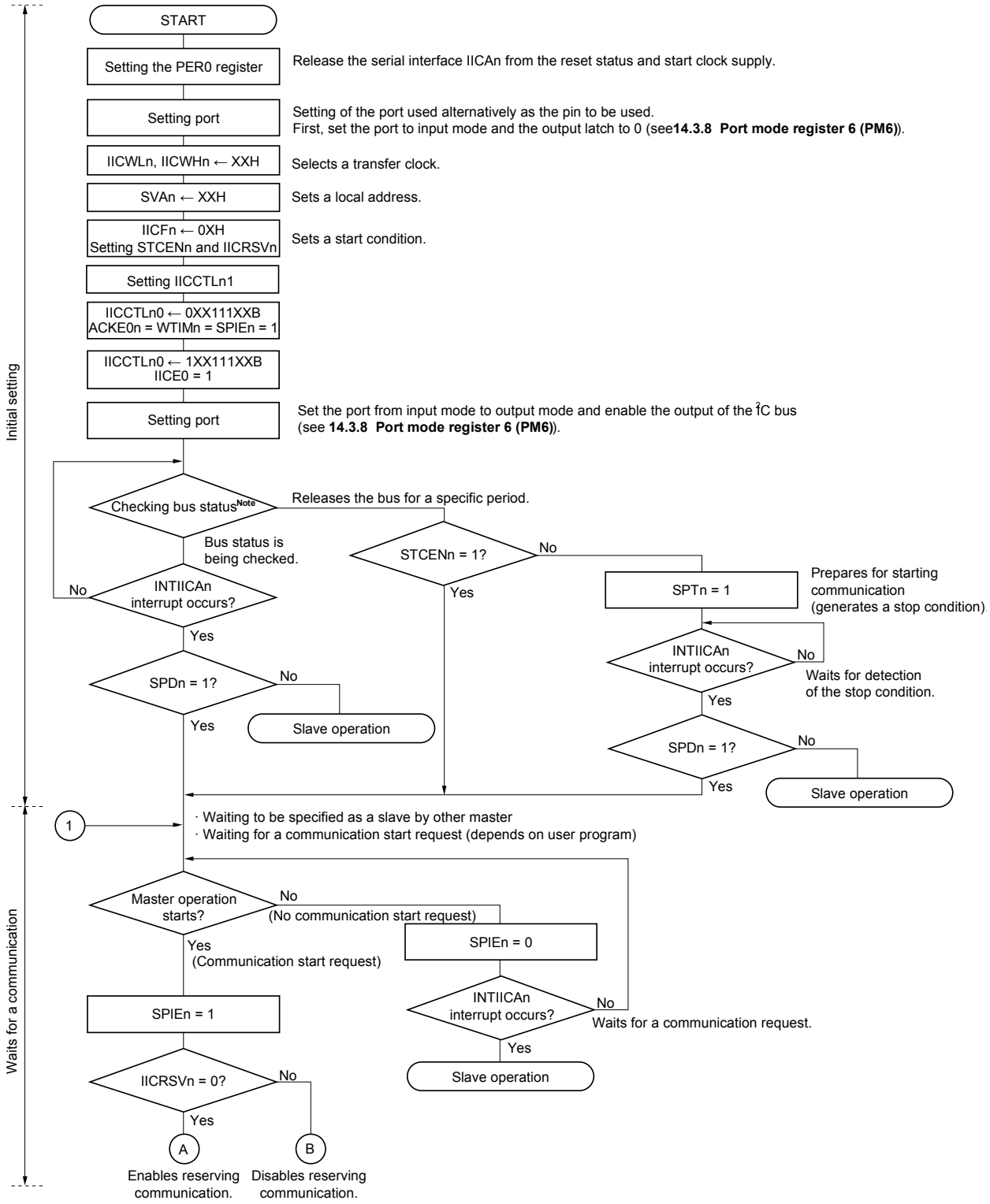

Note Confirm that the bus is released (CLDn bit = 1, DADn bit = 1) for a specific period (for example, for a period of one frame). If the SDAAn pin is constantly at low level, decide whether to release the I^2C bus (SCLAn and SDAAn pins = high level) in conformance with the specifications of the product that is communicating.

Remark n = 0

Figure 14-29. Master Operation in Multi-Master System (2/3)

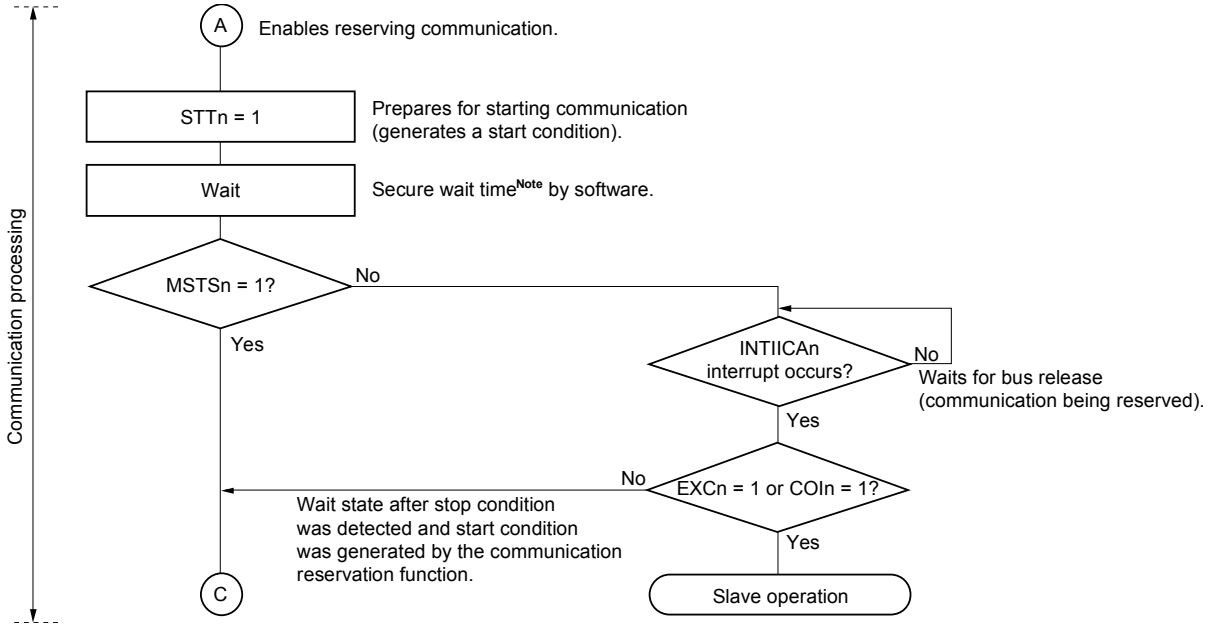

Note The wait time is calculated as follows.

(IICWLn setting value + IICWHn setting value + 4) × f_{CLK} + t_F × 2 [clocks]

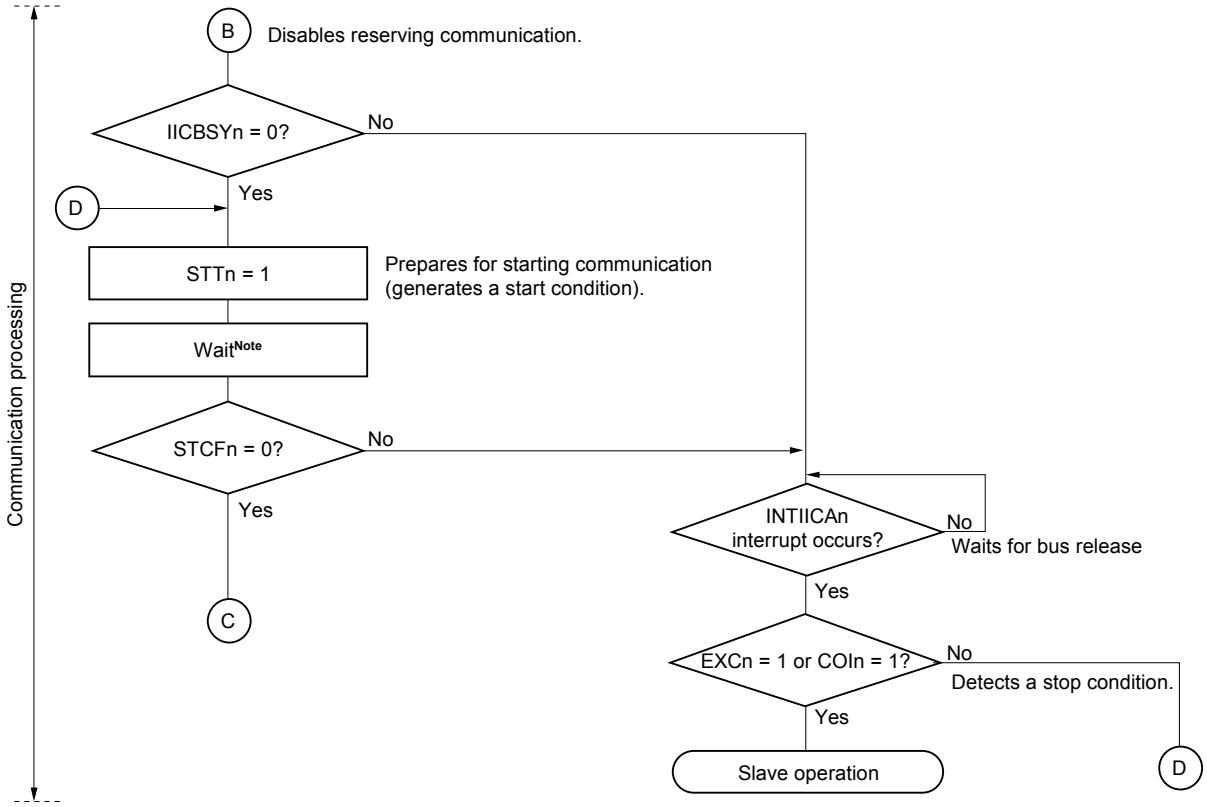

Remarks 1. IICWLn: IICA low-level width setting register n

IICWHn: IICA high-level width setting register n

t_F: SDAAn and SCLAn signal falling times

f_{MCK}: IICA operation clock frequency

2. n = 0

Figure 14-29. Master Operation in Multi-Master System (3/3)

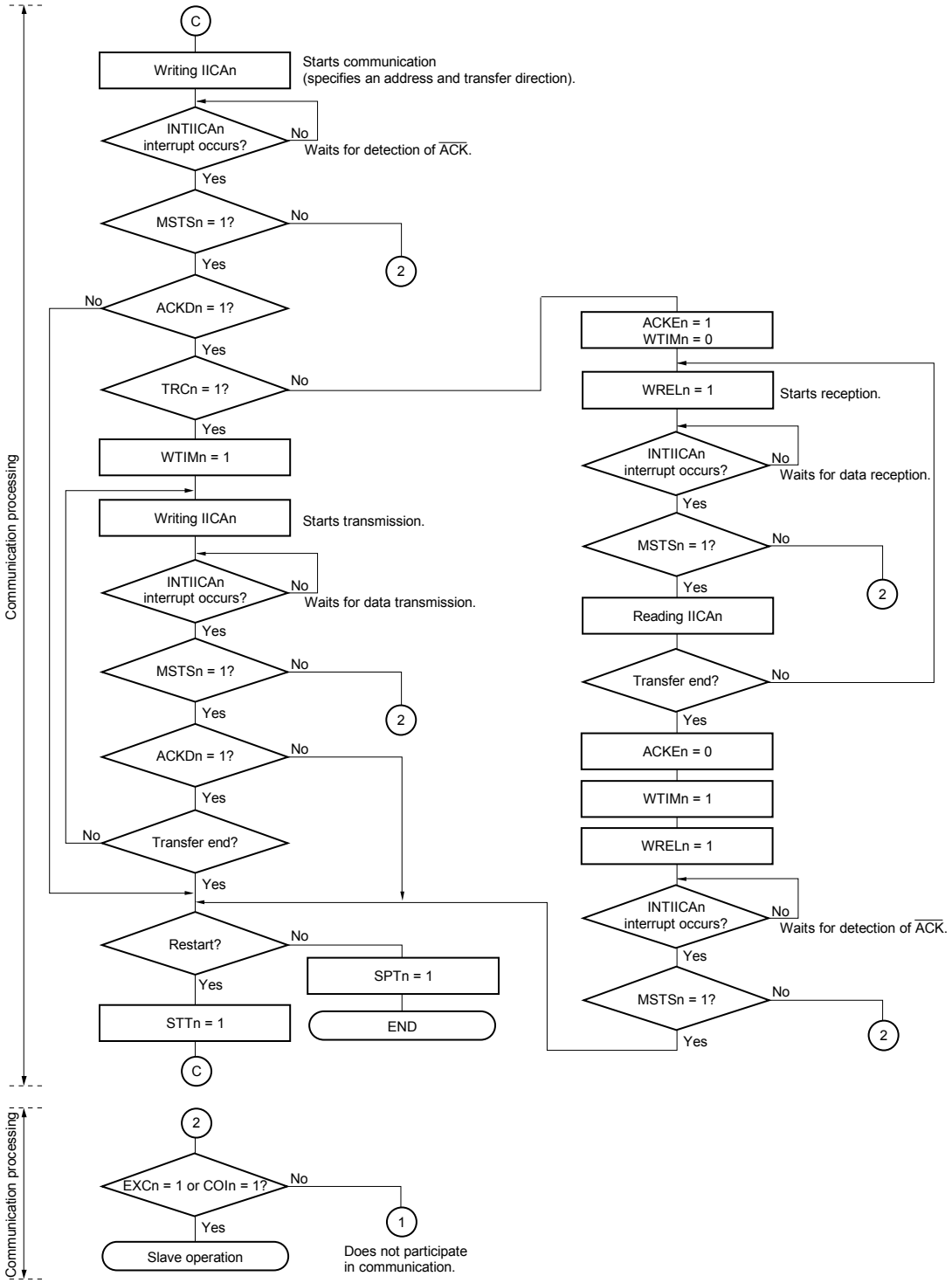

Remarks 1. Conform to the specifications of the product that is communicating, with respect to the transmission and reception formats.

2. To use the device as a master in a multi-master system, read the MSTSn bit each time interrupt INTIICAn has occurred to check the arbitration result.

3. To use the device as a slave in a multi-master system, check the status by using the IICA status register n (IICSn) and IICA flag register n (IICFn) each time interrupt INTIICAn has occurred, and determine the processing to be performed next.

4. n = 0

(3) Slave operation

The processing procedure of the slave operation is as follows.

Basically, the slave operation is event-driven. Therefore, processing by the INTIICAn interrupt (processing that must substantially change the operation status such as detection of a stop condition during communication) is necessary.

In the following explanation, it is assumed that the extension code is not supported for data communication. It is also assumed that the INTIICAn interrupt servicing only performs status transition processing, and that actual data communication is performed by the main processing.

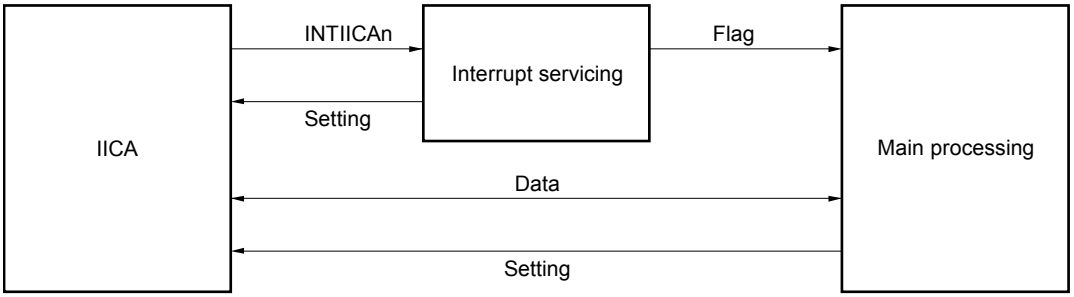

Therefore, data communication processing is performed by preparing the following three flags and passing them to the main processing instead of INTIICAn.

<1> Communication mode flag

This flag indicates the following two communication statuses.

- Clear mode: Status in which data communication is not performed
- Communication mode: Status in which data communication is performed (from valid address detection to stop condition detection, no detection of $\overline{\text{ACK}}$ from master, address mismatch)

<2> Ready flag

This flag indicates that data communication is enabled. Its function is the same as the INTIICAn interrupt for ordinary data communication. This flag is set by interrupt servicing and cleared by the main processing. Clear this flag by interrupt servicing when communication is started. However, the ready flag is not set by interrupt servicing when the first data is transmitted. Therefore, the first data is transmitted without the flag being cleared (an address match is interpreted as a request for the next data).

<3> Communication direction flag

This flag indicates the direction of communication. Its value is the same as the TRCn bit.

Remark n = 0

The main processing of the slave operation is explained next.

Start serial interface IICA and wait until communication is enabled. When communication is enabled, execute communication by using the communication mode flag and ready flag (processing of the stop condition and start condition is performed by an interrupt. Here, check the status by using the flags).

The transmission operation is repeated until the master no longer returns $\overline{ACK}$. If $\overline{ACK}$ is not returned from the master, communication is completed.

For reception, the necessary amount of data is received. When communication is completed, $\overline{ACK}$ is not returned as the next data. After that, the master generates a stop condition or restart condition. Exit from the communication status occurs in this way.

Figure 14-30. Slave Operation Flowchart (1)

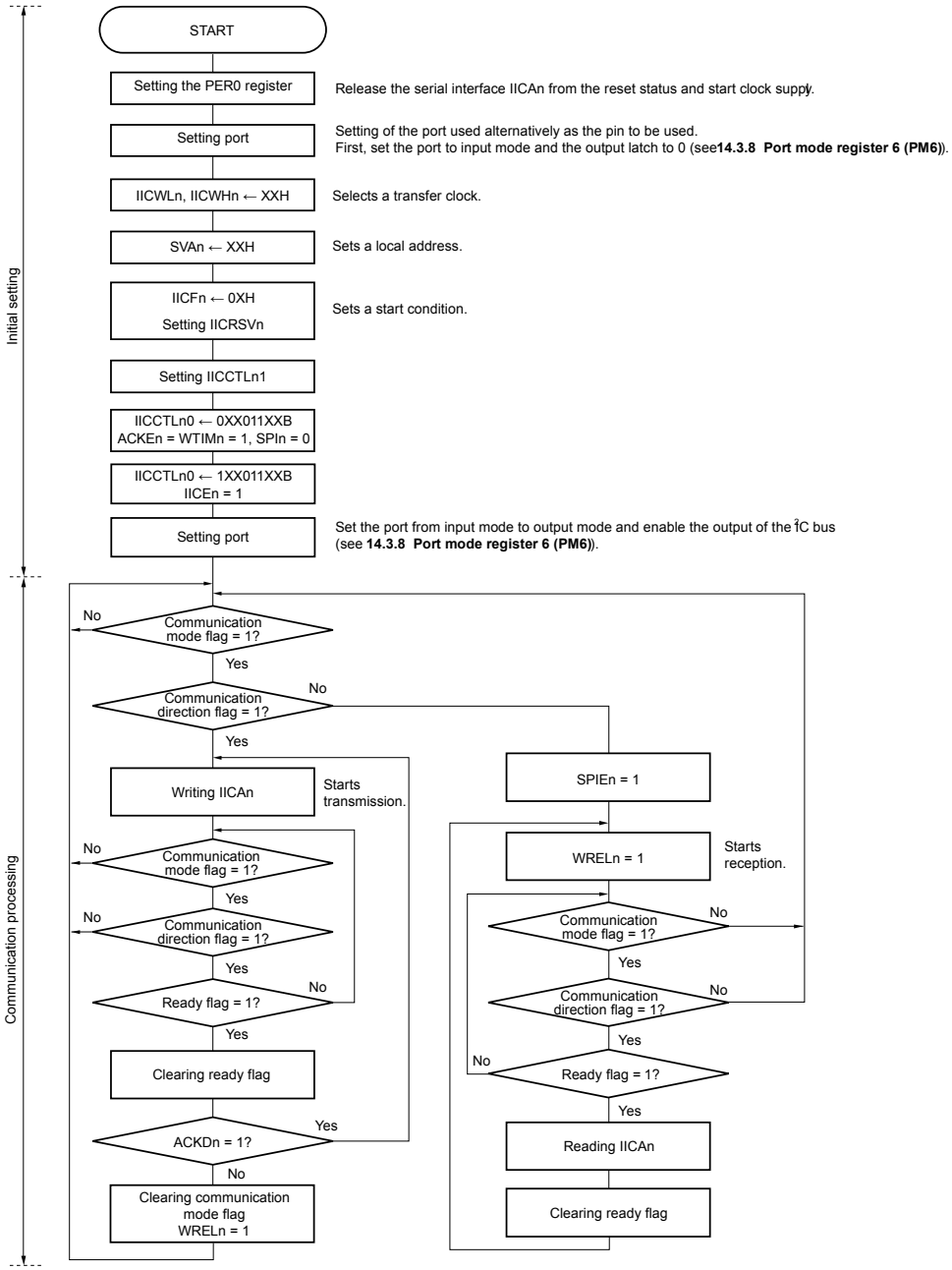

Remarks 1. Conform to the specifications of the product that is in communication, regarding the transmission and reception formats.

2. n = 0

An example of the processing procedure of the slave with the INTIICAn interrupt is explained below (processing is performed assuming that no extension code is used). The INTIICAn interrupt checks the status, and the following operations are performed.

<1> Communication is stopped if the stop condition is issued.
<2> If the start condition is issued, the address is checked and communication is completed if the address does not match. If the address matches, the communication mode is set, wait is cancelled, and processing returns from the interrupt (the ready flag is cleared).
<3> For data transmit/receive, only the ready flag is set. Processing returns from the interrupt with the I^2C bus remaining in the wait state.

Remark <1> to <3> above correspond to <1> to <3> in Figure 14-31 Slave Operation Flowchart (2).

Figure 14-31. Slave Operation Flowchart (2)

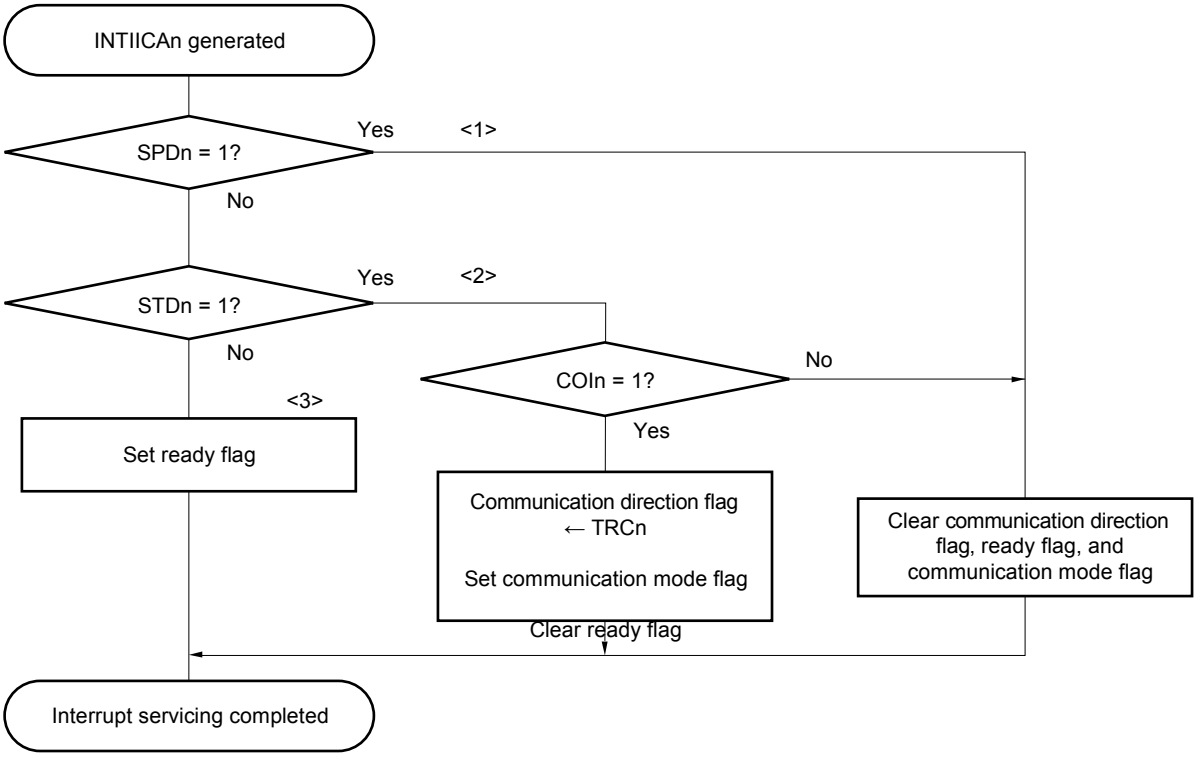

14.5.17 Timing of I^2C interrupt request (INTIICAn) occurrence

The timing of transmitting or receiving data and generation of interrupt request signal INTIICAn, and the value of the IICA status register n (IICSn) when the INTIICAn signal is generated are shown below.

Remarks 1. ST: Start condition
AD6 to AD0: Address
R/$\overline{W}$: Transfer direction specification
$\overline{ACK}$: Acknowledge
D7 to D0: Data
SP: Stop condition
2. n = 0

(1) Master device operation

(a) Start ~ Address ~ Data ~ Data ~ Stop (transmission/reception)

(i) When WTIMn = 0

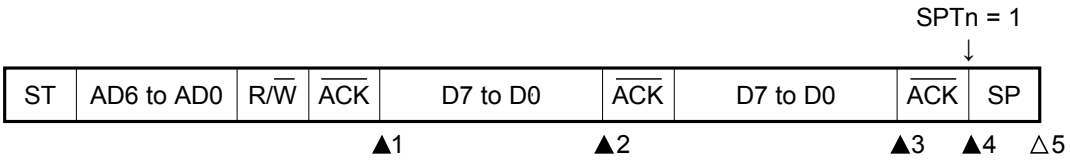

▲1: IICSn = 1000×110B
▲2: IICSn = 1000×000B
▲3: IICSn = 1000×000B (Sets the WTIMn bit to 1)[Note]
▲4: IICSn = 1000××00B (Sets the SPTn bit to 1)[Note]
△5: IICSn = 00000001B

Note To generate a stop condition, set the WTIMn bit to 1 and change the timing for generating the INTIICAn interrupt request signal.

Remark ▲: Always generated
△: Generated only when SPIEn = 1
×: Don't care

(ii) When WTIMn = 1

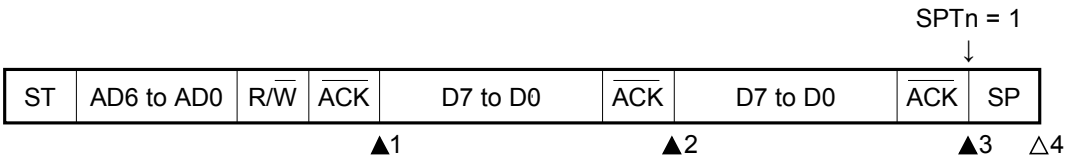

▲1: IICSn = 1000×110B
▲2: IICSn = 1000×100B
▲3: IICSn = 1000××00B (Sets the SPTn bit to 1)
△4: IICSn = 00000001B

Remark ▲: Always generated
△: Generated only when SPIEn = 1
×: Don't care

Remark n = 0

(b) Start ~ Address ~ Data ~ Start ~ Address ~ Data ~ Stop (restart)

(i) When WTIMn = 0

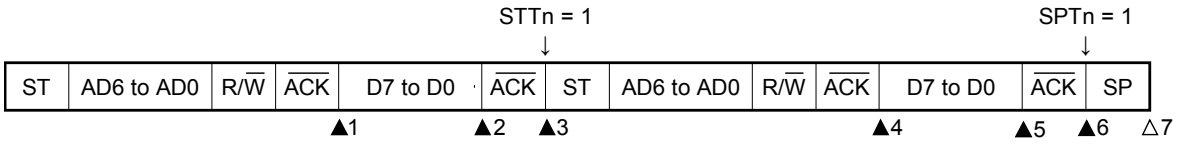

▲1: IICSn = 1000×110B
▲2: IICSn = 1000×000B (Sets the WTIMn bit to 1)[Note 1]
▲3: IICSn = 1000××00B (Clears the WTIMn bit to 0[Note 2], sets the STTn bit to 1)
▲4: IICSn = 1000×110B
▲5: IICSn = 1000×000B (Sets the WTIMn bit to 1)[Note 3]
▲6: IICSn = 1000××00B (Sets the SPTn bit to 1)
△7: IICSn = 00000001B

Notes 1. To generate a start condition, set the WTIMn bit to 1 and change the timing for generating the INTIICAn interrupt request signal.
2. Clear the WTIMn bit to 0 to restore the original setting.
3. To generate a stop condition, set the WTIMn bit to 1 and change the timing for generating the INTIICAn interrupt request signal.

Remark ▲: Always generated
△: Generated only when SPIEn = 1
×: Don't care

(ii) When WTIMn = 1

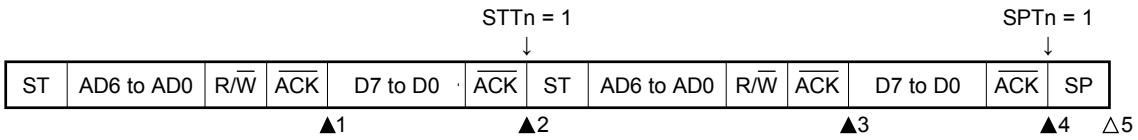

▲1: IICSn = 1000×110B
▲2: IICSn = 1000××00B (Sets the STTn bit to 1)
▲3: IICSn = 1000×110B
▲4: IICSn = 1000××00B (Sets the SPTn bit to 1)
△5: IICSn = 00000001B

Remark ▲: Always generated
△: Generated only when SPIEn = 1
×: Don't care

Remark n = 0

(c) Start ~ Code ~ Data ~ Data ~ Stop (extension code transmission)

(i) When WTIMn = 0

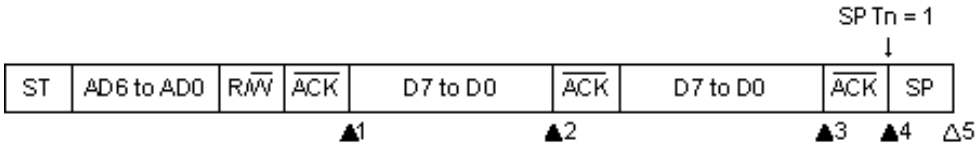

▲1: IICSn = 1010×110B
▲2: IICSn = 1010×000B
▲3: IICSn = 1010×000B (Sets the WTIMn bit to 1)[Note]
▲4: IICSn = 1010××00B (Sets the SPTn bit to 1)
△5: IICSn = 00000001B

Note To generate a stop condition, set the WTIMn bit to 1 and change the timing for generating the INTIICAn interrupt request signal.

Remark ▲: Always generated
△: Generated only when SPIEn = 1
×: Don't care

(ii) When WTIMn = 1

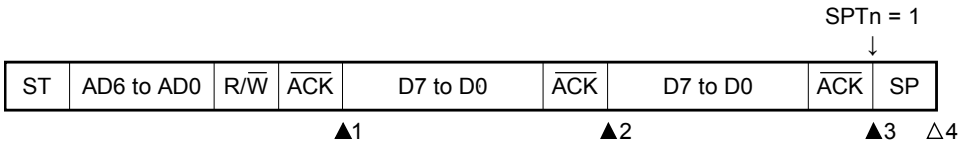

▲1: IICSn = 1010×110B
▲2: IICSn = 1010×100B
▲3: IICSn = 1010××00B (Sets the SPTn bit to 1)
△4: IICSn = 00001001B

Remark ▲: Always generated
△: Generated only when SPIEn = 1
×: Don't care

Remark n = 0

(2) Slave device operation (slave address data reception)

(a) Start ~ Address ~ Data ~ Data ~ Stop

(i) When WTIMn = 0

ST	AD6 to AD0	R/$\overline{W}$	$\overline{ACK}$	D7 to D0	$\overline{ACK}$	D7 to D0	$\overline{ACK}$	SP
			▲1		▲2		▲3	△4

▲1: IICSn = 0001×110B
▲2: IICSn = 0001×000B
▲3: IICSn = 0001×000B
△4: IICSn = 00000001B

Remark ▲: Always generated
△: Generated only when SPIEn = 1
×: Don't care

(ii) When WTIMn = 1

ST	AD6 to AD0	R/$\overline{W}$	$\overline{ACK}$	D7 to D0	$\overline{ACK}$	D7 to D0	$\overline{ACK}$	SP
				▲1		▲2	▲3	△4

▲1: IICSn = 0001×110B
▲2: IICSn = 0001×100B
▲3: IICSn = 0001××00B
△4: IICSn = 00000001B

Remark ▲: Always generated
△: Generated only when SPIEn = 1
×: Don't care

Remark n = 0

(b) Start ~ Address ~ Data ~ Start ~ Address ~ Data ~ Stop

(i) When WTIMn = 0 (after restart, matches with SVAn)

ST	AD6 to AD0	R/$\overline{W}$	$\overline{ACK}$	D7 to D0	$\overline{ACK}$	ST	AD6 to AD0	R/$\overline{W}$	$\overline{ACK}$	D7 to D0	$\overline{ACK}$	SP
			▲1		▲2					▲3	▲4	△5

▲1: IICSn = 0001×110B
▲2: IICSn = 0001×000B
▲3: IICSn = 0001×110B
▲4: IICSn = 0001×000B
△5: IICSn = 00000001B

Remark ▲: Always generated
△: Generated only when SPIEn = 1
×: Don't care

(ii) When WTIMn = 1 (after restart, matches with SVAn)

ST	AD6 to AD0	R/$\overline{W}$	$\overline{ACK}$	D7 to D0	$\overline{ACK}$	ST	AD6 to AD0	R/$\overline{W}$	$\overline{ACK}$	D7 to D0	$\overline{ACK}$	SP
			▲1			▲2				▲3	▲4	△5

▲1: IICSn = 0001×110B
▲2: IICSn = 0001××00B
▲3: IICSn = 0001×110B
▲4: IICSn = 0001××00B
△5: IICSn = 00000001B

Remark ▲: Always generated
△: Generated only when SPIEn = 1
×: Don't care

Remark n = 0

(c) Start ~ Address ~ Data ~ Start ~ Code ~ Data ~ Stop

(i) When WTIMn = 0 (after restart, does not match address (= extension code))

ST	AD6 to AD0	R/$\overline{W}$	$\overline{ACK}$	D7 to D0	$\overline{ACK}$	ST	AD6 to AD0	R/$\overline{W}$	$\overline{ACK}$	D7 to D0	$\overline{ACK}$	SP
			▲1		▲2				▲3		▲4	△5

▲1: IICSn = 0001×110B
▲2: IICSn = 0001×000B
▲3: IICSn = 0010×010B
▲4: IICSn = 0010×000B
△5: IICSn = 00000001B

Remark ▲: Always generated
△: Generated only when SPIEn = 1
×: Don't care

(ii) When WTIMn = 1 (after restart, does not match address (= extension code))

ST	AD6 to AD0	R/$\overline{W}$	$\overline{ACK}$	D7 to D0	$\overline{ACK}$	ST	AD6 to AD0	R/$\overline{W}$	$\overline{ACK}$	D7 to D0	$\overline{ACK}$	SP
			▲1			▲2			▲3	▲4	▲5	△6

▲1: IICSn = 0001×110B
▲2: IICSn = 0001××00B
▲3: IICSn = 0010×010B
▲4: IICSn = 0010×110B
▲5: IICSn = 0010××00B
△6: IICSn = 00000001B

Remark ▲: Always generated
△: Generated only when SPIEn = 1
×: Don't care

Remark n = 0

(d) Start ~ Address ~ Data ~ Start ~ Address ~ Data ~ Stop

(i) When WTIMn = 0 (after restart, does not match address (= not extension code))

ST	AD6 to AD0	R/$\overline{W}$	$\overline{ACK}$	D7 to D0	$\overline{ACK}$	ST	AD6 to AD0	R/$\overline{W}$	$\overline{ACK}$	D7 to D0	$\overline{ACK}$	SP
			▲1		▲2					▲3		△4

▲1: IICSn = 0001×110B
▲2: IICSn = 0001×000B
▲3: IICSn = 00000×10B
△4: IICSn = 00000001B

Remark ▲: Always generated
△: Generated only when SPIEn = 1
×: Don't care

(ii) When WTIMn = 1 (after restart, does not match address (= not extension code))

ST	AD6 to AD0	R/$\overline{W}$	$\overline{ACK}$	D7 to D0	$\overline{ACK}$	ST	AD6 to AD0	R/$\overline{W}$	$\overline{ACK}$	D7 to D0	$\overline{ACK}$	SP
			▲1			▲2				▲3		△4

▲1: IICSn = 0001×110B
▲2: IICSn = 0001××00B
▲3: IICSn = 00000×10B
△4: IICSn = 00000001B

Remark ▲: Always generated
△: Generated only when SPIEn = 1
×: Don't care

Remark n = 0

(3) Slave device operation (when receiving extension code)

The device is always participating in communication when it receives an extension code.

(a) Start ~ Code ~ Data ~ Data ~ Stop

(i) When WTIMn = 0

ST	AD6 to AD0	R/$\overline{W}$	$\overline{ACK}$	D7 to D0	$\overline{ACK}$	D7 to D0	$\overline{ACK}$	SP
			▲1		▲2		▲3	△4

▲1: IICSn = 0010×010B
▲2: IICSn = 0010×000B
▲3: IICSn = 0010×000B
△4: IICSn = 00000001B

Remark ▲: Always generated
△: Generated only when SPIEn = 1
×: Don't care

(ii) When WTIMn = 1

ST	AD6 to AD0	R/$\overline{W}$	$\overline{ACK}$	D7 to D0	$\overline{ACK}$	D7 to D0	$\overline{ACK}$	SP
			▲1	▲2		▲3	▲4	△5

▲1: IICSn = 0010×010B
▲2: IICSn = 0010×110B
▲3: IICSn = 0010×100B
▲4: IICSn = 0010××00B
△5: IICSn = 00000001B

Remark ▲: Always generated
△: Generated only when SPIEn = 1
×: Don't care

Remark n = 0

(b) Start ~ Code ~ Data ~ Start ~ Address ~ Data ~ Stop

(i) When WTIMn = 0 (after restart, matches SVAn)

ST	AD6 to AD0	R/$\overline{W}$	$\overline{ACK}$	D7 to D0	$\overline{ACK}$	ST	AD6 to AD0	R/$\overline{W}$	$\overline{ACK}$	D7 to D0	$\overline{ACK}$	SP
			▲1		▲2					▲3	▲4	△5

▲1: IICSn = 0010×010B
▲2: IICSn = 0010×000B
▲3: IICSn = 0001×110B
▲4: IICSn = 0001×000B
△5: IICSn = 00000001B

Remark ▲: Always generated
△: Generated only when SPIEn = 1
×: Don't care

(ii) When WTIMn = 1 (after restart, matches SVAn)

ST	AD6 to AD0	R/$\overline{W}$	$\overline{ACK}$	D7 to D0	$\overline{ACK}$	ST	AD6 to AD0	R/$\overline{W}$	$\overline{ACK}$	D7 to D0	$\overline{ACK}$	SP
			▲1	▲2		▲3				▲4	▲5	△6

▲1: IICSn = 0010×010B
▲2: IICSn = 0010×110B
▲3: IICSn = 0010××00B
▲4: IICSn = 0001×110B
▲5: IICSn = 0001××00B
△6: IICSn = 00000001B

Remark ▲: Always generated
△: Generated only when SPIEn = 1
×: Don't care

Remark n = 0

(c) Start ~ Code ~ Data ~ Start ~ Code ~ Data ~ Stop

(i) When WTIMn = 0 (after restart, extension code reception)

ST	AD6 to AD0	R/$\overline{W}$	$\overline{ACK}$	D7 to D0	$\overline{ACK}$	ST	AD6 to AD0	R/$\overline{W}$	$\overline{ACK}$	D7 to D0	$\overline{ACK}$	SP
			▲1		▲2				▲3		▲4	△5

▲1: IICSn = 0010×010B
▲2: IICSn = 0010×000B
▲3: IICSn = 0010×010B
▲4: IICSn = 0010×000B
△5: IICSn = 00000001B

Remark ▲: Always generated
△: Generated only when SPIEn = 1
×: Don't care

(ii) When WTIMn = 1 (after restart, extension code reception)

ST	AD6 to AD0	R/$\overline{W}$	$\overline{ACK}$	D7 to D0	$\overline{ACK}$	ST	AD6 to AD0	R/$\overline{W}$	$\overline{ACK}$	D7 to D0	$\overline{ACK}$	SP
			▲1	▲2		▲3			▲4	▲5	▲6	△7

▲1: IICSn = 0010×010B
▲2: IICSn = 0010×110B
▲3: IICSn = 0010××00B
▲4: IICSn = 0010×010B
▲5: IICSn = 0010×110B
▲6: IICSn = 0010××00B
△7: IICSn = 00000001B

Remark ▲: Always generated
△: Generated only when SPIEn = 1
×: Don't care

Remark n = 0

(d) Start ~ Code ~ Data ~ Start ~ Address ~ Data ~ Stop

(i) When WTIMn = 0 (after restart, does not match address (= not extension code))

ST	AD6 to AD0	R/$\overline{W}$	$\overline{ACK}$	D7 to D0	$\overline{ACK}$	ST	AD6 to AD0	R/$\overline{W}$	$\overline{ACK}$	D7 to D0	$\overline{ACK}$	SP
			▲1		▲2					▲3		△4

▲1: IICSn = 0010×010B
▲2: IICSn = 0010×000B
▲3: IICSn = 00000×10B
△4: IICSn = 00000001B

Remark ▲: Always generated
△: Generated only when SPIEn = 1
×: Don't care

(ii) When WTIMn = 1 (after restart, does not match address (= not extension code))

ST	AD6 to AD0	R/$\overline{W}$	$\overline{ACK}$	D7 to D0	$\overline{ACK}$	ST	AD6 to AD0	R/$\overline{W}$	$\overline{ACK}$	D7 to D0	$\overline{ACK}$	SP
			▲1	▲2		▲3				▲4		△5

▲1: IICSn = 0010×010B
▲2: IICSn = 0010×110B
▲3: IICSn = 0010××00B
▲4: IICSn = 00000×10B
△5: IICSn = 00000001B

Remark ▲: Always generated
△: Generated only when SPIEn = 1
×: Don't care

Remark n = 0

(4) Operation without communication

(a) Start ~ Code ~ Data ~ Data ~ Stop

ST	AD6 to AD0	R/$\overline{W}$	$\overline{ACK}$	D7 to D0	$\overline{ACK}$	D7 to D0	$\overline{ACK}$	SP

△1

△1: IICSn = 00000001B

Remark △: Generated only when SPIEn = 1

(5) Arbitration loss operation (operation as slave after arbitration loss)

When the device is used as a master in a multi-master system, read the MSTSn bit each time interrupt request signal INTIICAn has occurred to check the arbitration result.

(a) When arbitration loss occurs during transmission of slave address data

(i) When WTIMn = 0

ST	AD6 to AD0	R/$\overline{W}$	$\overline{ACK}$	D7 to D0	$\overline{ACK}$	D7 to D0	$\overline{ACK}$	SP

▲1 ▲2 ▲3 △4

▲1: IICSn = 0101×110B
▲2: IICSn = 0001×000B
▲3: IICSn = 0001×000B
△4: IICSn = 00000001B

Remark ▲: Always generated
△: Generated only when SPIEn = 1
×: Don't care

Remark n = 0

(ii) When WTIMn = 1

ST	AD6 to AD0	R/$\overline{W}$	$\overline{ACK}$	D7 to D0	$\overline{ACK}$	D7 to D0	$\overline{ACK}$	SP

▲1 ▲2 ▲3 △4

▲1: IICSn = 0101×110B
▲2: IICSn = 0001×100B
▲3: IICSn = 0001××00B
△4: IICSn = 00000001B

Remark ▲: Always generated
△: Generated only when SPIEn = 1
×: Don't care

(b) When arbitration loss occurs during transmission of extension code

(i) When WTIMn = 0

ST	AD6 to AD0	R/$\overline{W}$	$\overline{ACK}$	D7 to D0	$\overline{ACK}$	D7 to D0	$\overline{ACK}$	SP

▲1 ▲2 ▲3 △4

▲1: IICSn = 0110×010B
▲2: IICSn = 0010×000B
▲3: IICSn = 0010×000B
△4: IICSn = 00000001B

Remark ▲: Always generated
△: Generated only when SPIEn = 1
×: Don't care

Remark n = 0

(ii) When WTIMn = 1

ST	AD6 to AD0	R/$\overline{W}$	$\overline{ACK}$	D7 to D0	$\overline{ACK}$	D7 to D0	$\overline{ACK}$	SP
			▲1	▲2		▲3		▲4 △5

▲1: IICSn = 0110×010B
▲2: IICSn = 0010×110B
▲3: IICSn = 0010×100B
▲4: IICSn = 0010××00B
△5: IICSn = 00000001B

Remark ▲: Always generated
△: Generated only when SPIEn = 1
×: Don't care

(6) Operation when arbitration loss occurs (no communication after arbitration loss)

When the device is used as a master in a multi-master system, read the MSTSn bit each time interrupt request signal INTIICAn has occurred to check the arbitration result.

(a) When arbitration loss occurs during transmission of slave address data (when WTIMn = 1)

ST	AD6 to AD0	R/$\overline{W}$	$\overline{ACK}$	D7 to D0	$\overline{ACK}$	D7 to D0	$\overline{ACK}$	SP
				▲1				△2

▲1: IICSn = 01000110B
△2: IICSn = 00000001B

Remark ▲: Always generated
△: Generated only when SPIEn = 1

Remark n = 0

(b) When arbitration loss occurs during transmission of extension code

ST	AD6 to AD0	R/$\overline{W}$	$\overline{ACK}$	D7 to D0	$\overline{ACK}$	D7 to D0	$\overline{ACK}$	SP
			▲1					△2

▲1: IICSn = 0110×010B
Sets LRELn = 1 by software
△2: IICSn = 00000001B

Remark ▲: Always generated
△: Generated only when SPIEn = 1
×: Don't care

(c) When arbitration loss occurs during transmission of data

(i) When WTIMn = 0

ST	AD6 to AD0	R/$\overline{W}$	$\overline{ACK}$	D7 to D0	$\overline{ACK}$	D7 to D0	$\overline{ACK}$	SP
				▲1	▲2			△3

▲1: IICSn = 10001110B
▲2: IICSn = 01000000B
△3: IICSn = 00000001B

Remark ▲: Always generated
△: Generated only when SPIEn = 1

Remark n = 0

(ii) When WTIMn = 1

ST	AD6 to AD0	R/$\overline{W}$	$\overline{ACK}$	D7 to D0	$\overline{ACK}$	D7 to D0	$\overline{ACK}$	SP

▲1 ▲2 △3

▲1: IICSn = 10001110B
▲2: IICSn = 01000100B
△3: IICSn = 00000001B

Remark ▲: Always generated
△: Generated only when SPIEn = 1

(d) When loss occurs due to restart condition during data transfer

(i) Not extension code (Example: unmatches with SVAn)

ST	AD6 to AD0	R/$\overline{W}$	$\overline{ACK}$	D7 to Dm	ST	AD6 to AD0	R/$\overline{W}$	$\overline{ACK}$	D7 to D0	$\overline{ACK}$	SP

▲1 ▲2 △3

▲1: IICSn = 1000×110B
▲2: IICSn = 01000110B
△3: IICSn = 00000001B

Remark ▲: Always generated
△: Generated only when SPIEn = 1
×: Don't care
m = 6 to 0

Remark n = 0

(ii) Extension code

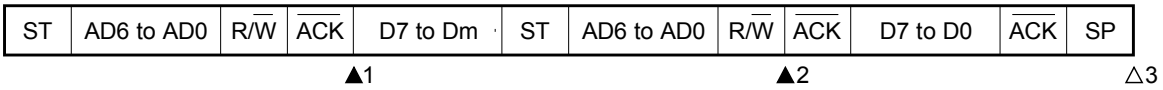

▲1: IICSn = 1000×110B
▲2: IICSn = 01100010B
Sets LRELn = 1 by software
△3: IICSn = 00000001B

Remark ▲: Always generated
△: Generated only when SPIEn = 1
×: Don't care
m = 6 to 0

(e) When loss occurs due to stop condition during data transfer

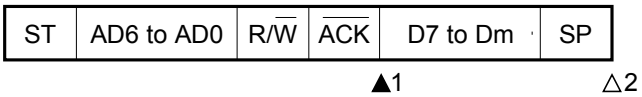

▲1: IICSn = 10000110B
△2: IICSn = 01000001B

Remark ▲: Always generated
△: Generated only when SPIEn = 1
×: Don't care
m = 6 to 0

Remark n = 0

(f) When arbitration loss occurs due to low-level data when attempting to generate a restart condition

(i) When WTIMn = 0

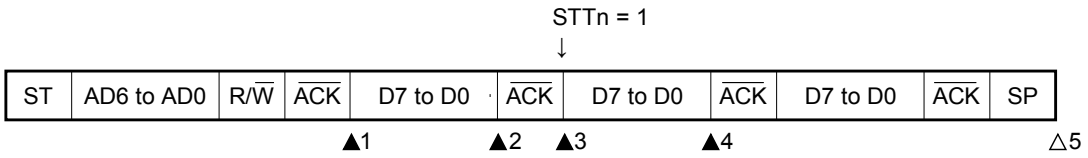

▲1: IICSn = 1000×110B
▲2: IICSn = 1000×000B (Sets the WTIMn bit to 1)
▲3: IICSn = 1000×100B (Clears the WTIMn bit to 0)
▲4: IICSn = 01000000B
△5: IICSn = 00000001B

Remark ▲: Always generated
△: Generated only when SPIEn = 1
×: Don’t care

(ii) When WTIMn = 1

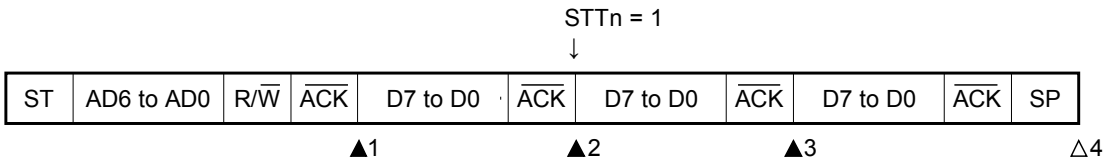

▲1: IICSn = 1000×110B
▲2: IICSn = 1000×100B (Sets the STTn bit to 1)
▲3: IICSn = 01000100B
△4: IICSn = 00000001B

Remark ▲: Always generated
△: Generated only when SPIEn = 1
×: Don’t care

Remark n = 0

(g) When arbitration loss occurs due to a stop condition when attempting to generate a restart condition

(i) When WTIMn = 0

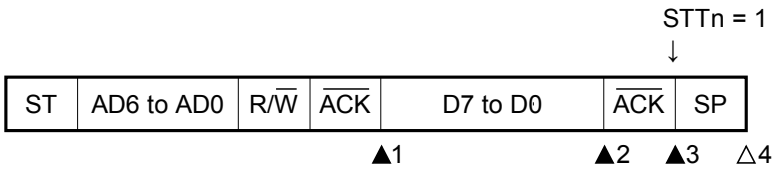

▲1: IICSn = 1000×110B
▲2: IICSn = 1000×000B (Sets the WTIMn bit to 1)
▲3: IICSn = 1000××00B (Sets the STTn bit to 1)
△4: IICSn = 01000001B

Remark ▲: Always generated
△: Generated only when SPIEn = 1
×: Don't care

(ii) When WTIMn = 1

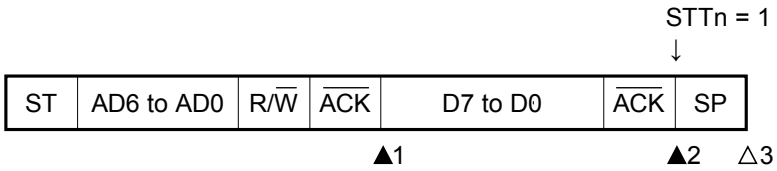

▲1: IICSn = 1000×110B
▲2: IICSn = 1000××00B (Sets the STTn bit to 1)
△3: IICSn = 01000001B

Remark ▲: Always generated
△: Generated only when SPIEn = 1
×: Don't care

Remark n = 0

(h) When arbitration loss occurs due to low-level data when attempting to generate a stop condition

(i) When WTIMn = 0

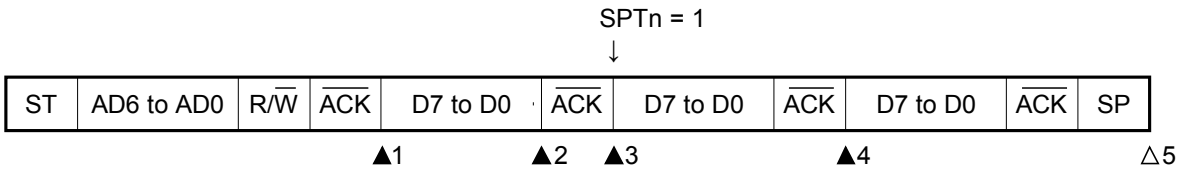

▲1: IICSn = 1000×110B
▲2: IICSn = 1000×000B (Sets the WTIMn bit to 1)
▲3: IICSn = 1000×100B (Clears the WTIMn bit to 0)
▲4: IICSn = 01000100B
△5: IICSn = 00000001B

Remark ▲: Always generated
△: Generated only when SPIEn = 1
×: Don't care

(ii) When WTIMn = 1

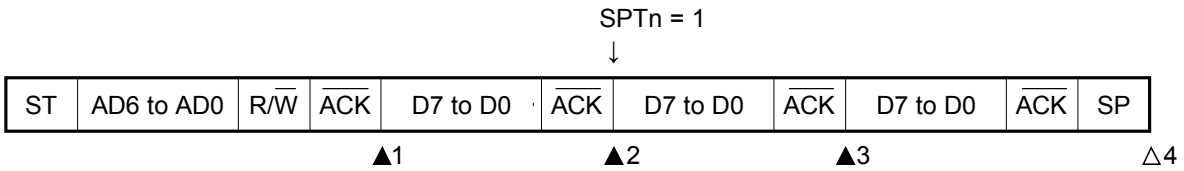

▲1: IICSn = 1000×110B
▲2: IICSn = 1000×100B (Sets the SPTn bit to 1)
▲3: IICSn = 01000100B
△4: IICSn = 00000001B

Remark ▲: Always generated
△: Generated only when SPIEn = 1
×: Don't care

Remark n = 0

14.6 Timing Charts

When using the I^2C bus mode, the master device outputs an address via the serial bus to select one of several slave devices as its communication partner.

After outputting the slave address, the master device transmits the TRCn bit (bit 3 of the IICA status register n (IICSn)), which specifies the data transfer direction, and then starts serial communication with the slave device.

Figures 14-32 and 14-33 show timing charts of the data communication.

The IICA shift register n (IICAn)'s shift operation is synchronized with the falling edge of the serial clock (SCLAn). The transmit data is transferred to the SO latch and is output (MSB first) via the SDAAn pin.

Data input via the SDAAn pin is captured into IICAn at the rising edge of SCLAn.

Remark n = 0

Figure 14-32. Example of Master to Slave Communication (9-Clock Wait Is Selected for Master, 9-Clock Wait Is Selected for Slave) (1/4)

(a) Start condition ~ address ~ data

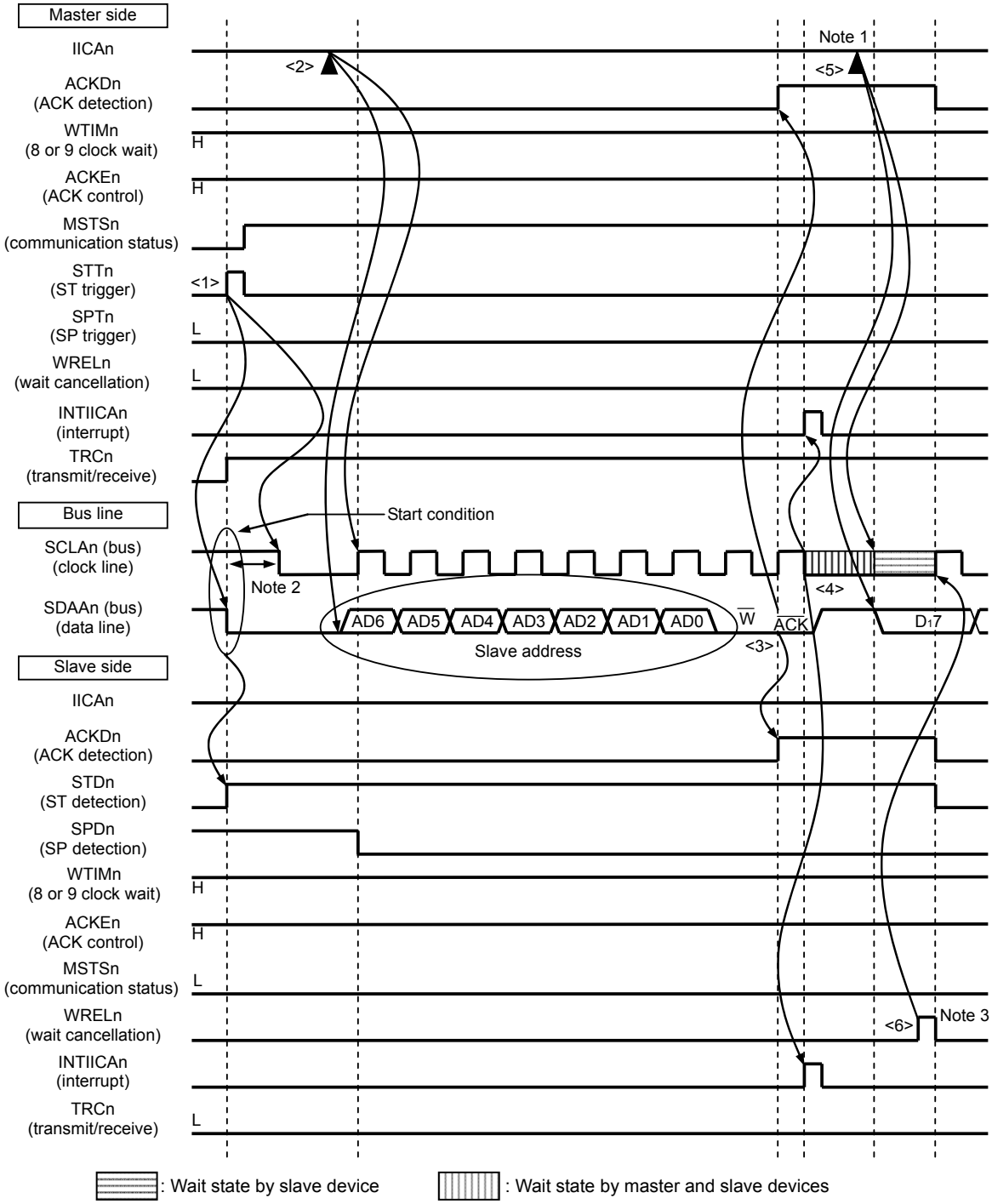

Notes 1. Write data to IICAn, not setting the WRELn bit, in order to cancel a wait state during transmission by a master device.

2. Make sure that the time between the fall of the SDAAn pin signal and the fall of the SCLAn pin signal is at least 4.0 μs when specifying standard mode and at least 0.6 μs when specifying fast mode.

3. For releasing wait state during reception of a slave device, write “FFH” to IICAn or set the WRELn bit.

Remark n = 0

The meanings of <1> to <6> in (a) Start condition ~ address ~ data in Figure 14-32 are explained below.

<1> The start condition trigger is set by the master device (STTn = 1) and a start condition (i.e. SCLAn = 1 changes SDAAn from 1 to 0) is generated once the bus data line goes low (SDAAn). When the start condition is subsequently detected, the master device enters the master device communication status (MSTSn = 1). The master device is ready to communicate once the bus clock line goes low (SCLAn = 0) after the hold time has elapsed.

<2> The master device writes the address + W (transmission) to the IICA shift register n (IICAn) and transmits the slave address.

<3> In the slave device if the address received matches the address (SVAn value) of a slave device[Note], that slave device sends an ACK by hardware to the master device. The ACK is detected by the master device (ACKDn = 1) at the rising edge of the 9th clock.

<4> The master device issues an interrupt (INTIICAn: end of address transmission) at the falling edge of the 9th clock. The slave device whose address matched the transmitted slave address sets a wait status (SCLAn = 0) and issues an interrupt (INTIICAn: address match)[Note].

<5> The master device writes the data to transmit to the IICAn register and releases the wait status that it set by the master device.

<6> If the slave device releases the wait status (WRELn = 1), the master device starts transferring data to the slave device.

Note If the transmitted address does not match the address of the slave device, the slave device does not return an ACK to the master device (NACK: SDAAn = 1). The slave device also does not issue the INTIICAn interrupt (address match) and does not set a wait status. The master device, however, issues the INTIICAn interrupt (end of address transmission) regardless of whether it receives an ACK or NACK.

Remarks 1. <1> to <15> in Figure 14-32 represent the entire procedure for communicating data using the I^2C bus.
Figure 14-32 (a) Start condition ~ address ~ data shows the processing from <1> to <6>, Figure 14-32 (b) Address ~ data ~ data shows the processing from <3> to <10>, and Figure 14-32 (c) Data ~ data ~ stop condition shows the processing from <7> to <15>.

2. n = 0

Figure 14-32. Example of Master to Slave Communication
(9-Clock Wait Is Selected for Master, 9-Clock Wait Is Selected for Slave) (2/4)

(b) Address ~ data ~ data

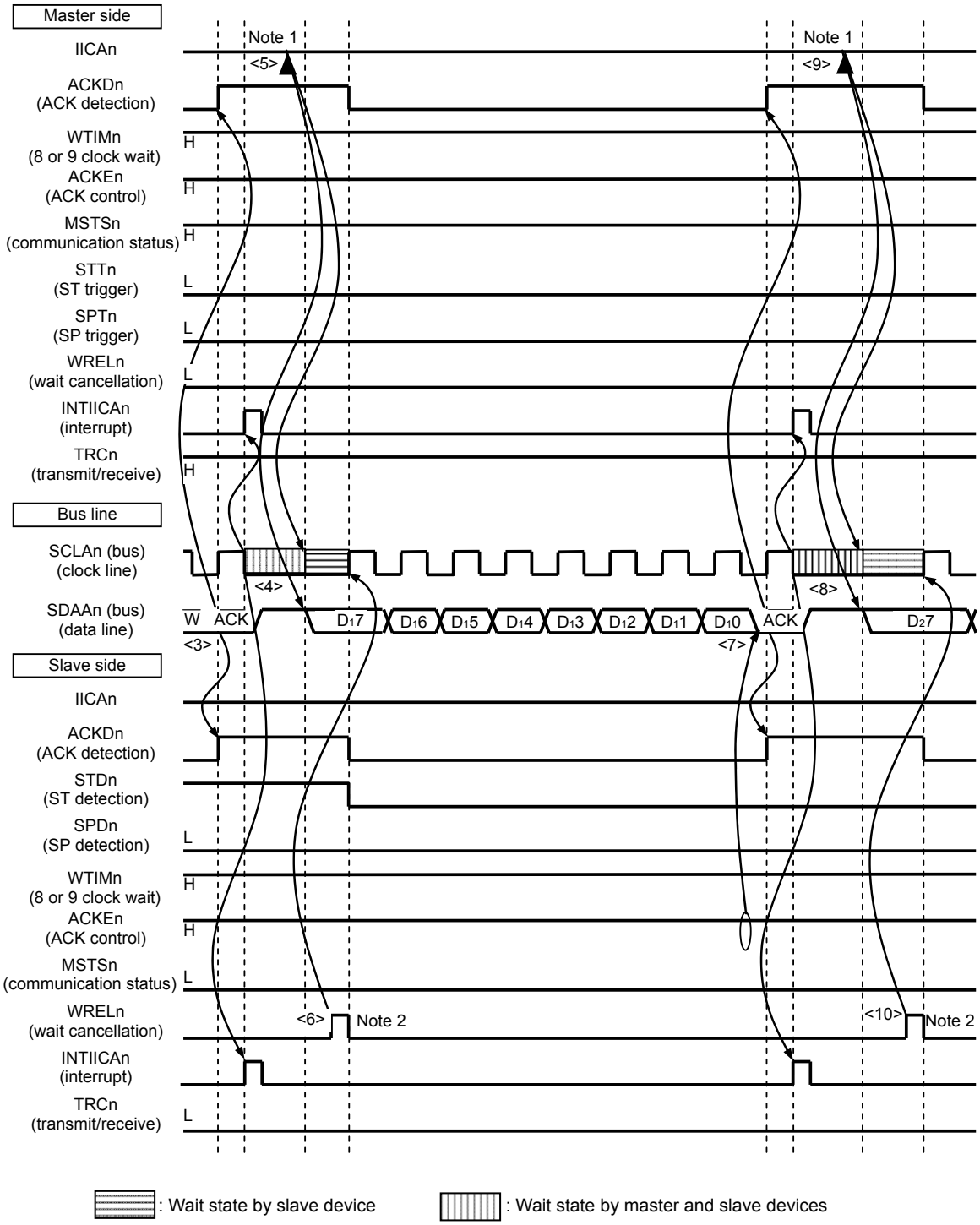

Notes 1. Write data to IICAn, not setting the WRELn bit, in order to cancel a wait state during transmission by a master device.

2. For releasing wait state during reception of a slave device, write “FFH” to IICAn or set the WRELn bit.

Remark n = 0

The meanings of <3> to <10> in (b) Address ~ data ~ data in Figure 14-32 are explained below.

<3> In the slave device if the address received matches the address (SVAn value) of a slave device[Note], that slave device sends an ACK by hardware to the master device. The ACK is detected by the master device (ACKDn = 1) at the rising edge of the 9th clock.

<4> The master device issues an interrupt (INTIICAn: end of address transmission) at the falling edge of the 9th clock. The slave device whose address matched the transmitted slave address sets a wait status (SCLAn = 0) and issues an interrupt (INTIICAn: address match)[Note].

<5> The master device writes the data to transmit to the IICA shift register n (IICAn) and releases the wait status that it set by the master device.

<6> If the slave device releases the wait status (WRELn = 1), the master device starts transferring data to the slave device.

<7> After data transfer is completed, because of ACKEn = 1, the slave device sends an ACK by hardware to the master device. The ACK is detected by the master device (ACKDn = 1) at the rising edge of the 9th clock.

<8> The master device and slave device set a wait status (SCLAn = 0) at the falling edge of the 9th clock, and both the master device and slave device issue an interrupt (INTIICAn: end of transfer).

<9> The master device writes the data to transmit to the IICAn register and releases the wait status that it set by the master device.

<10> The slave device reads the received data and releases the wait status (WRELn = 1). The master device then starts transferring data to the slave device.

Note If the transmitted address does not match the address of the slave device, the slave device does not return an ACK to the master device (NACK: SDAAn = 1). The slave device also does not issue the INTIICAn interrupt (address match) and does not set a wait status. The master device, however, issues the INTIICAn interrupt (end of address transmission) regardless of whether it receives an ACK or NACK.

Remarks 1. <1> to <15> in Figure 14-32 represent the entire procedure for communicating data using the I^2C bus.
Figure 14-32 (a) Start condition ~ address ~ data shows the processing from <1> to <6>, Figure 14-32 (b) Address ~ data ~ data shows the processing from <3> to <10>, and Figure 14-32 (c) Data ~ data ~ stop condition shows the processing from <7> to <15>.

2. n = 0

Figure 14-32. Example of Master to Slave Communication (9-Clock Wait Is Selected for Master, 9-Clock Wait Is Selected for Slave) (3/4)

(c) Data ~ data ~ Stop condition

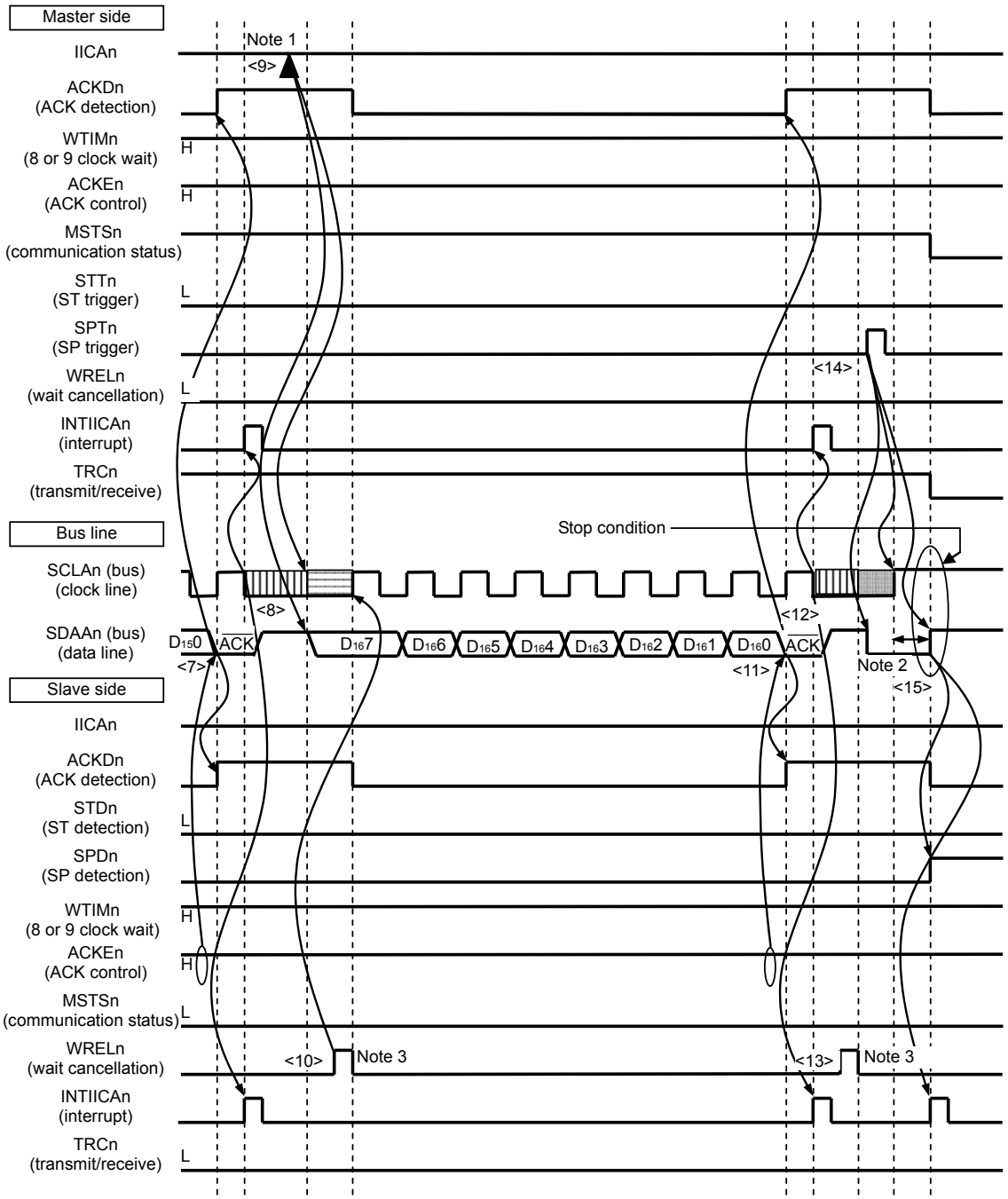

Notes 1. Write data to IICAn, not setting the WRELn bit, in order to cancel a wait state during transmission by a master device.

2. Make sure that the time between the rise of the SCLAn pin signal and the generation of the stop condition after a stop condition has been issued is at least 4.0 μs when specifying standard mode and at least 0.6 μs when specifying fast mode.

3. For releasing wait state during reception of a slave device, write “FFH” to IICAn or set the WRELn bit.

Remark n = 0

The meanings of <7> to <15> in (c) Data ~ data ~ stop condition in Figure 14-32 are explained below.

<7> After data transfer is completed, because of ACKEn = 1, the slave device sends an ACK by hardware to the master device. The ACK is detected by the master device (ACKDn = 1) at the rising edge of the 9th clock.

<8> The master device and slave device set a wait status (SCLAn = 0) at the falling edge of the 9th clock, and both the master device and slave device issue an interrupt (INTIICAn: end of transfer).

<9> The master device writes the data to transmit to the IICA shift register n (IICAn) and releases the wait status that it set by the master device.

<10> The slave device reads the received data and releases the wait status (WRELn = 1). The master device then starts transferring data to the slave device.

<11> When data transfer is complete, the slave device (ACKEn =1) sends an ACK by hardware to the master device. The ACK is detected by the master device (ACKDn = 1) at the rising edge of the 9th clock.

<12> The master device and slave device set a wait status (SCLAn = 0) at the falling edge of the 9th clock, and both the master device and slave device issue an interrupt (INTIICAn: end of transfer).

<13> The slave device reads the received data and releases the wait status (WRELn = 1).

<14> By the master device setting a stop condition trigger (SPTn = 1), the bus data line is cleared (SDAAn = 0) and the bus clock line is set (SCLAn = 1). After the stop condition setup time has elapsed, by setting the bus data line (SDAAn = 1), the stop condition is then generated (i.e. SCLAn =1 changes SDAAn from 0 to 1).

<15> When a stop condition is generated, the slave device detects the stop condition and issues an interrupt (INTIICAn: stop condition).

Remarks 1. <1> to <15> in Figure 14-32 represent the entire procedure for communicating data using the I^2C bus.
Figure 14-32 (a) Start condition ~ address ~ data shows the processing from <1> to <6>, Figure 14-32 (b) Address ~ data ~ data shows the processing from <3> to <10>, and Figure 14-32 (c) Data ~ data ~ stop condition shows the processing from <7> to <15>.

2. n = 0

Figure 14-32. Example of Master to Slave Communication (9-Clock Wait Is Selected for Master, 9-Clock Wait Is Selected for Slave) (4/4)

(d) Data ~ restart condition ~ address

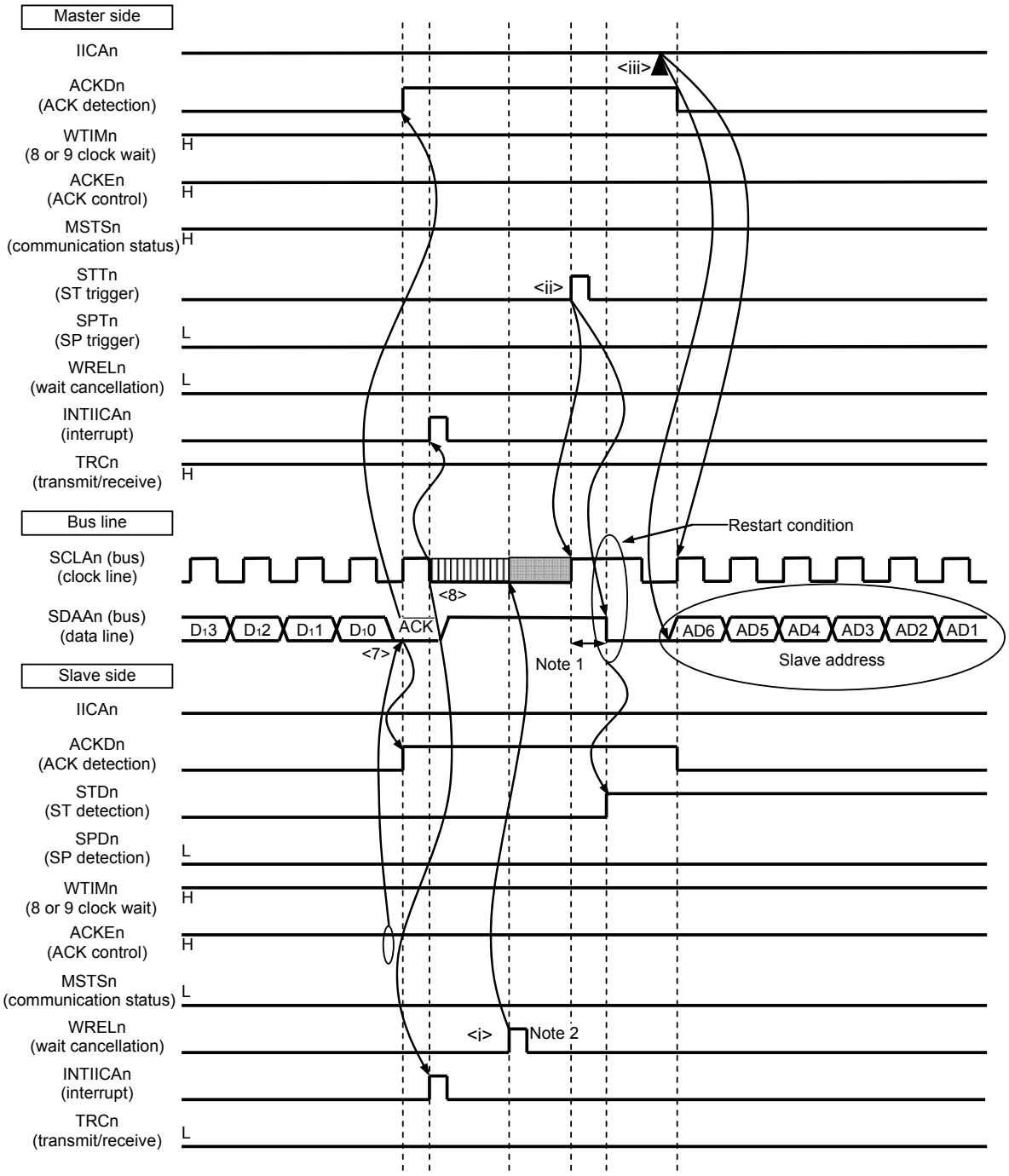

: Wait state by master device : Wait state by slave device : Wait state by master and slave devices

Notes 1. Make sure that the time between the rise of the SCLAn pin signal and the generation of the start condition after a restart condition has been issued is at least 4.7 μs when specifying standard mode and at least 0.6 μs when specifying fast mode.

2. For releasing wait state during reception of a slave device, write “FFH” to IICAn or set the WRELn bit.

Remark n = 0

The following describes the operations in Figure 14-32 (d) Data ~ restart condition ~ address. After the operations in steps <7> and <8>, the operations in steps <i> to <iii> are performed. These steps return the processing to step <iii>, the data transmission step.

<7> After data transfer is completed, because of ACKEn = 1, the slave device sends an ACK by hardware to the master device. The ACK is detected by the master device (ACKDn = 1) at the rising edge of the 9th clock.

<8> The master device and slave device set a wait status (SCLAn = 0) at the falling edge of the 9th clock, and both the master device and slave device issue an interrupt (INTIICAn: end of transfer).

<i> The slave device reads the received data and releases the wait status (WRELn = 1).

<ii> The start condition trigger is set again by the master device (STTn = 1) and a start condition (i.e. SCLAn =1 changes SDAAn from 1 to 0) is generated once the bus clock line goes high (SCLAn = 1) and the bus data line goes low (SDAAn = 0) after the restart condition setup time has elapsed. When the start condition is subsequently detected, the master device is ready to communicate once the bus clock line goes low (SCLAn = 0) after the hold time has elapsed.

<iii> The master device writing the address + R/W (transmission) to the IICA shift register (IICAn) enables the slave address to be transmitted.

Remark n = 0

Figure 14-33. Example of Slave to Master Communication (8-Clock Wait Is Selected for Master, 9-Clock Wait Is Selected for Slave) (1/3)

(a) Start condition ~ address ~ data

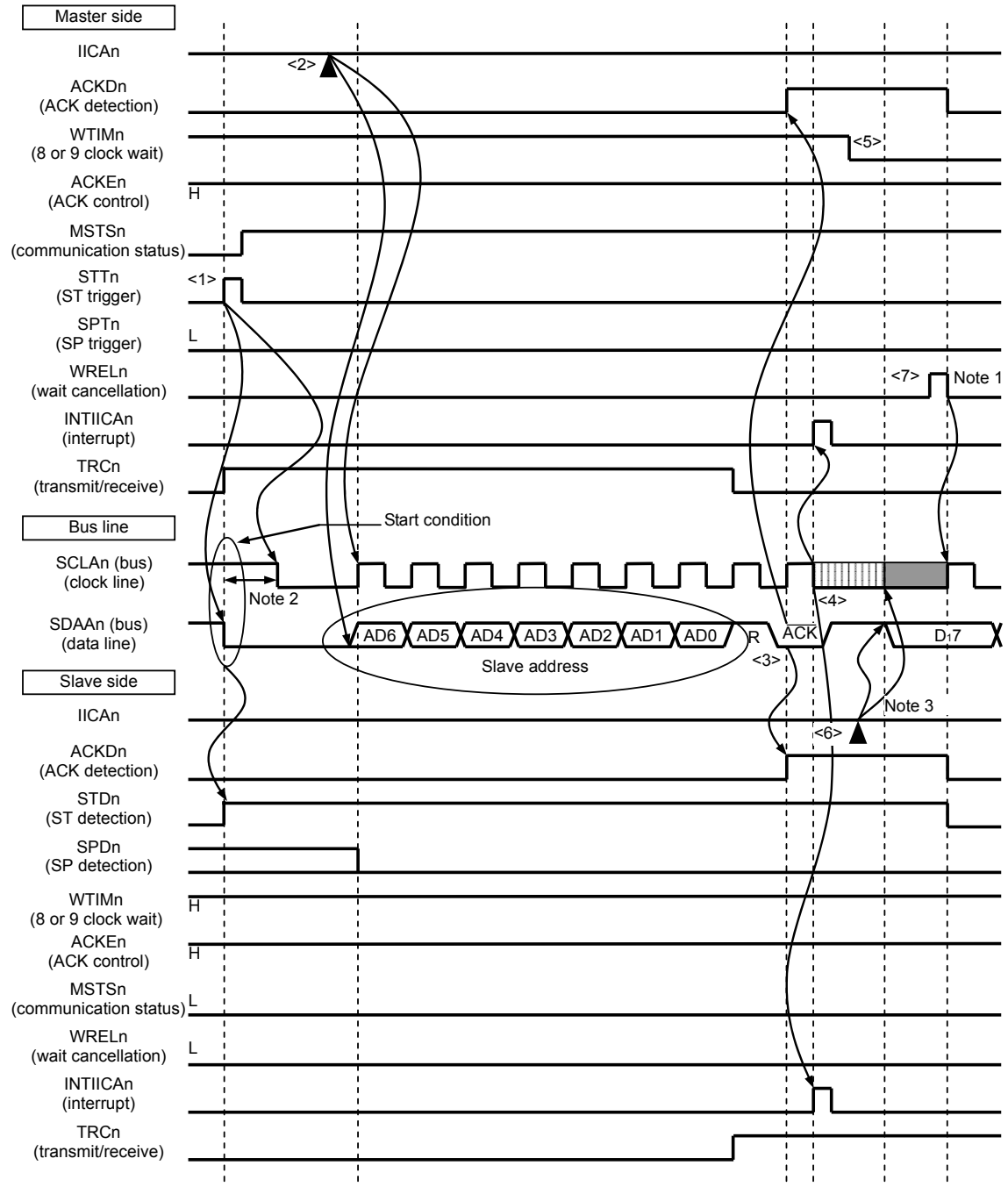

Notes 1. For releasing wait state during reception of a master device, write “FFH” to IICAn or set the WRELn bit.

2. Make sure that the time between the fall of the SDAAn pin signal and the fall of the SCLAn pin signal is at least 4.0 μs when specifying standard mode and at least 0.6 μs when specifying fast mode.

3. Write data to IICAn, not setting the WRELn bit, in order to cancel a wait state during transmission by a slave device.

Remark n = 0

The meanings of <1> to <7> in (a) Start condition ~ address ~ data in Figure 14-33 are explained below.

<1> The start condition trigger is set by the master device (STTn = 1) and a start condition (i.e. SCLAn =1 changes SDAAn from 1 to 0) is generated once the bus data line goes low (SDAAn). When the start condition is subsequently detected, the master device enters the master device communication status (MSTSn = 1). The master device is ready to communicate once the bus clock line goes low (SCLAn = 0) after the hold time has elapsed.

<2> The master device writes the address + R (reception) to the IICA shift register n (IICAn) and transmits the slave address.

<3> In the slave device if the address received matches the address (SVAn value) of a slave device Note, that slave device sends an ACK by hardware to the master device. The ACK is detected by the master device (ACKDn = 1) at the rising edge of the 9th clock.

<4> The master device issues an interrupt (INTIICAn: end of address transmission) at the falling edge of the 9th clock. The slave device whose address matched the transmitted slave address sets a wait status (SCLAn = 0) and issues an interrupt (INTIICAn: address match) Note.

<5> The timing at which the master device sets the wait status changes to the 8th clock (WTIMn = 0).

<6> The slave device writes the data to transmit to the IICAn register and releases the wait status that it set by the slave device.

<7> The master device releases the wait status (WRELn = 1) and starts transferring data from the slave device to the master device.

Note If the transmitted address does not match the address of the slave device, the slave device does not return an ACK to the master device (NACK: SDAAn = 1). The slave device also does not issue the INTIICAn interrupt (address match) and does not set a wait status. The master device, however, issues the INTIICAn interrupt (end of address transmission) regardless of whether it receives an ACK or NACK.

Remarks 1. <1> to <19> in Figure 14-33 represent the entire procedure for communicating data using the I^2C bus.
Figure 14-33 (a) Start condition ~ address ~ data shows the processing from <1> to <7>, Figure 14-33 (b) Address ~ data ~ data shows the processing from <3> to <12>, and Figure 14-33 (c) Data ~ data ~ stop condition shows the processing from <8> to <19>.

2. n = 0

Figure 14-33. Example of Slave to Master Communication (8-Clock Wait Is Selected for Master, 9-Clock Wait Is Selected for Slave) (2/3)

(b) Address ~ data ~ data

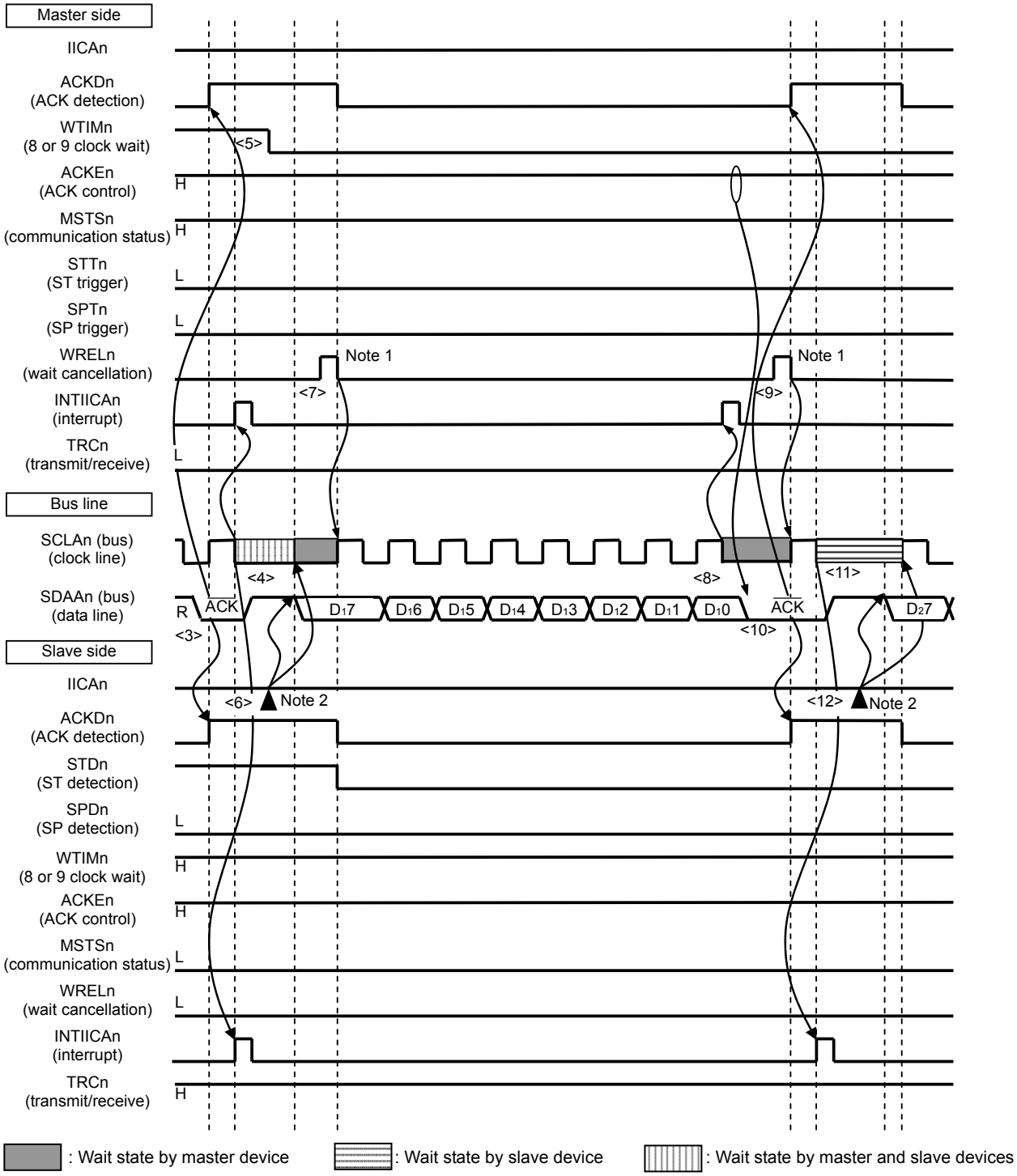

Notes 1. For releasing wait state during reception of a master device, write “FFH” to IICAn or set the WRELn bit.

2. Write data to IICAn, not setting the WRELn bit, in order to cancel a wait state during transmission by a slave device.

Remark n = 0

The meanings of <3> to <12> in (b) Address ~ data ~ data in Figure 14-33 are explained below.

<3> In the slave device if the address received matches the address (SVAn value) of a slave device[Note], that slave device sends an ACK by hardware to the master device. The ACK is detected by the master device (ACKDn = 1) at the rising edge of the 9th clock.

<4> The master device issues an interrupt (INTIICAn: end of address transmission) at the falling edge of the 9th clock. The slave device whose address matched the transmitted slave address sets a wait status (SCLAn = 0) and issues an interrupt (INTIICAn: address match) [Note].

<5> The master device changes the timing of the wait status to the 8th clock (WTIMn = 0).

<6> The slave device writes the data to transmit to the IICA shift register n (IICAn) and releases the wait status that it set by the slave device.

<7> The master device releases the wait status (WRELn = 1) and starts transferring data from the slave device to the master device.

<8> The master device sets a wait status (SCLAn = 0) at the falling edge of the 8th clock, and issues an interrupt (INTIICAn: end of transfer). Because of ACKEn = 1 in the master device, the master device then sends an ACK by hardware to the slave device.

<9> The master device reads the received data and releases the wait status (WRELn = 1).

<10> The ACK is detected by the slave device (ACKDn = 1) at the rising edge of the 9th clock.

<11> The slave device set a wait status (SCLAn = 0) at the falling edge of the 9th clock, and the slave device issue an interrupt (INTIICAn: end of transfer).

<12> By the slave device writing the data to transmit to the IICAn register, the wait status set by the slave device is released. The slave device then starts transferring data to the master device.

Note If the transmitted address does not match the address of the slave device, the slave device does not return an ACK to the master device (NACK: SDAAn = 1). The slave device also does not issue the INTIICAn interrupt (address match) and does not set a wait status. The master device, however, issues the INTIICAn interrupt (end of address transmission) regardless of whether it receives an ACK or NACK.

Remarks 1. <1> to <19> in Figure 14-33 represent the entire procedure for communicating data using the I^2C bus.
Figure 14-33 (a) Start condition ~ address ~ data shows the processing from <1> to <7>, Figure 14-33 (b) Address ~ data ~ data shows the processing from <3> to <12>, and Figure 14-33 (c) Data ~ data ~ stop condition shows the processing from <8> to <19>.

2. n = 0

Figure 14-33. Example of Slave to Master Communication
(8-Clock and 9-Clock Wait Is Selected for Master, 9-Clock Wait Is Selected for Slave) (3/3)

(c) Data ~ data ~ stop condition

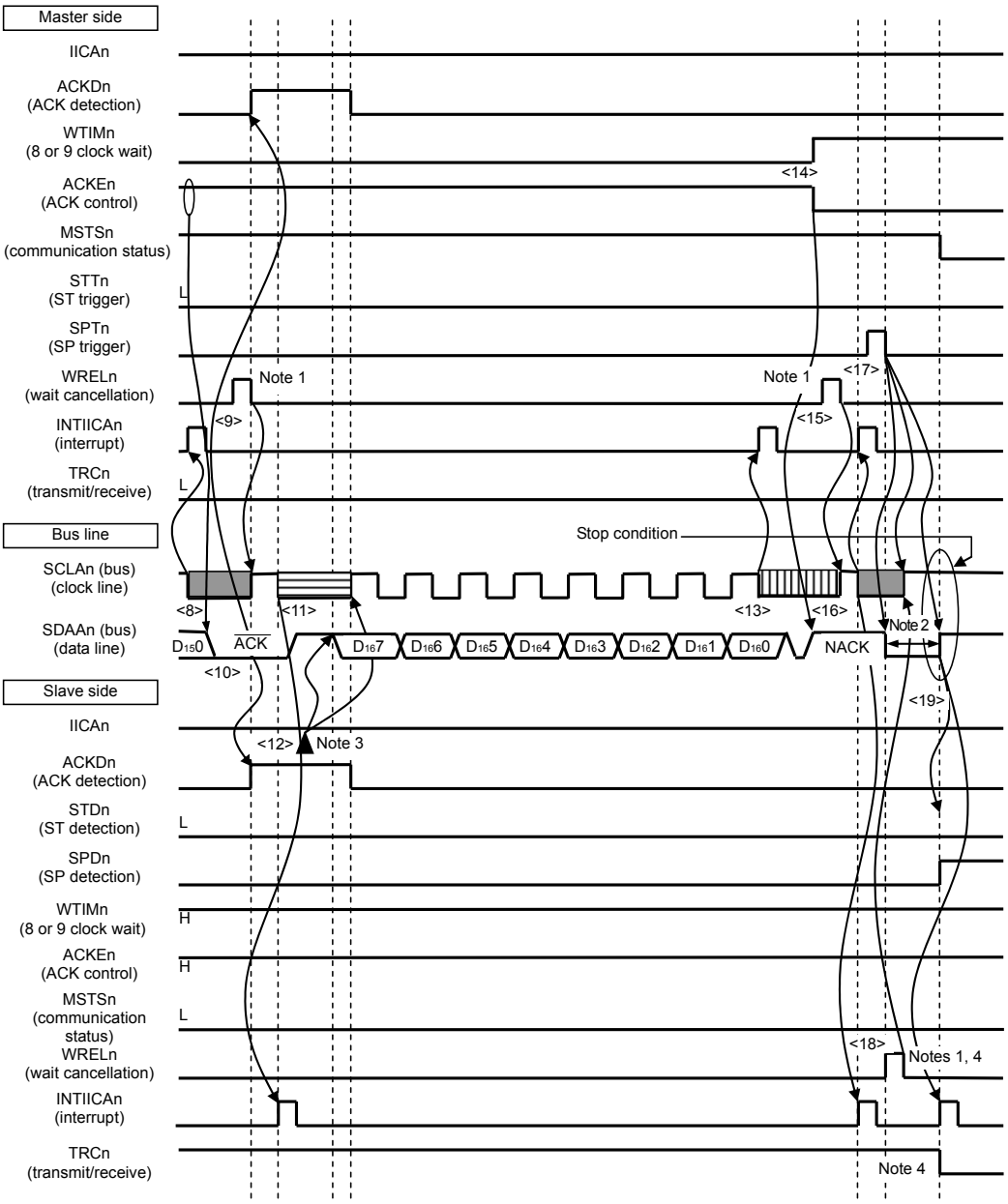

: Wait state by master device : Wait state by slave device : Wait state by master and slave devices

Notes 1. To cancel a wait state, write “FFH” to IICAn or set the WRELn bit.

2. Make sure that the time between the rise of the SCLAn pin signal and the generation of the stop condition after a stop condition has been issued is at least 4.0 μs when specifying standard mode and at least 0.6 μs when specifying fast mode.

3. Write data to IICAn, not setting the WRELn bit, in order to cancel a wait state during transmission by a slave device.

4. If a wait state during transmission by a slave device is canceled by setting the WRELn bit, the TRCn bit will be cleared.

Remark n = 0

The meanings of <8> to <19> in (c) Data ~ data ~ stop condition in Figure 14-33 are explained below.

<8> The master device sets a wait status (SCLAn = 0) at the falling edge of the 8th clock, and issues an interrupt (INTIICAn: end of transfer). Because of ACKEn = 0 in the master device, the master device then sends an ACK by hardware to the slave device.

<9> The master device reads the received data and releases the wait status (WRELn = 1).

<10> The ACK is detected by the slave device (ACKDn = 1) at the rising edge of the 9th clock.

<11> The slave device set a wait status (SCLAn = 0) at the falling edge of the 9th clock, and the slave device issue an interrupt (INTIICAn: end of transfer).

<12> By the slave device writing the data to transmit to the IICA register, the wait status set by the slave device is released. The slave device then starts transferring data to the master device.

<13> The master device issues an interrupt (INTIICAn: end of transfer) at the falling edge of the 8th clock, and sets a wait status (SCLAn = 0). Because ACK control (ACKEn = 1) is performed, the bus data line is at the low level (SDAAn = 0) at this stage.

<14> The master device sets NACK as the response (ACKEn = 0) and changes the timing at which it sets the wait status to the 9th clock (WTIMn = 1).

<15> If the master device releases the wait status (WRELn = 1), the slave device detects the NACK (ACK = 0) at the rising edge of the 9th clock.

<16> The master device and slave device set a wait status (SCLAn = 0) at the falling edge of the 9th clock, and both the master device and slave device issue an interrupt (INTIICAn: end of transfer).

<17> When the master device issues a stop condition (SPTn = 1), the bus data line is cleared (SDAAn = 0) and the master device releases the wait status. The master device then waits until the bus clock line is set (SCLAn = 1).

<18> The slave device acknowledges the NACK, halts transmission, and releases the wait status (WRELn = 1) to end communication. Once the slave device releases the wait status, the bus clock line is set (SCLAn = 1).

<19> Once the master device recognizes that the bus clock line is set (SCLAn = 1) and after the stop condition setup time has elapsed, the master device sets the bus data line (SDAAn = 1) and issues a stop condition (i.e. SCLAn =1 changes SDAAn from 0 to 1). The slave device detects the generated stop condition and slave device issue an interrupt (INTIICAn: stop condition).

Remarks 1. <1> to <19> in Figure 14-33 represent the entire procedure for communicating data using the I^2C bus.
Figure 14-33 (a) Start condition ~ address ~ data shows the processing from <1> to <7>, Figure 14-33 (b) Address ~ data ~ data shows the processing from <3> to <12>, and Figure 14-33 (c) Data ~ data ~ stop condition shows the processing from <8> to <19>.

2. n = 0

CHAPTER 15 RF TRANSCEIVER

Notes on using the RF transceiver

The use of wireless receivers and transmitters is restricted by international standards and domestic regulations. Wireless receivers and transmitters must therefore be used in accordance with the applicable laws and regulations of the country in which they are being used.

The following standards typically apply to the use of the 2.4 GHz band:
Japan: ARIB STD-T66
United States: FCC CFR47 Sections 15.247 and 15.249
Europe: EN300 440 and EN 300 328

The contents of this chapter are in accord with the settings for operations by the Bluetooth Low Energy protocol stack from Renesas.

15.1 Overview of RF Transceiver

The RF transceiver supports the Bluetooth ver.4.1 Specification (low energy, single mode).

The analog block consists of a low noise amplifier (LNA), mixer, ADC, power amplifier (PA), and frequency synthesizer (PLL).

The digital block consists of whitening, CRC, and AES CCM encryption functions, and enables master or slave operation of the Bluetooth Low Energy in single mode (Bluetooth ver.4.1 Specification).

The features of each block are shown in the following.

[Features]

Analog block:

- ISM band 2402-2480 MHz operation
- Conforms to the Bluetooth v4.1 Specification (low energy single mode)
  (modulation mode: GFSK, communication speed: 1 Mbps)
- Sensitivity: –90 dBm @PER 30.8%, maximum input level: Max. +1 dBm
- Output electric power: 0 dBm
- RSSI function
- Single ended RF interface

Digital block:

- Conforms to the Bluetooth v4.1 Specification (low energy single mode)
- Bit stream process (CRC, whitening)
- Security engine (AES-128)
- Frequency hopping calculation
- Frequency division multiple access (FDMA)/time division multiple access (TDMA) function
- All packet types
- Power save mode
- Includes a DC-DC converter

15.2 Pin Functions

15.2.1 Digital pins

The digital pins of the RF transceiver are shown below.

For pin status in operation modes of RF transceiver, see 15.4.5 Pin status in each mode.

(1) CLKOUT_RF

This is the output pin for a clock signal.

Output on this pin can be disabled or it can produce a clock signal at 16 MHz, 8 MHz, or 4 MHz obtained by frequency-dividing the 32-MHz RF base clock.

The output is disabled by default but this can be changed by using the Bluetooth Low Energy software stack from Renesas.

This signal can also be used as the external main system clock for the MCU by connecting it to the EXCLK pin.

If this is the case, this pin must be connected to the EXCLK pin on the user board.

(2) EXSLK_RF

This is the input pin for the RF slow clock (32.768 kHz) if an external clock is used with the RF transceiver.

When this pin is used for an externally input clock signal (square wave) instead of using the on-chip oscillator, a 32.768-kHz input to this pin is required.

In this case, the Bluetooth low Energy software stack from Renesas sets up sub-clock output (32.768 kHz) through the PCLBUZ0 pin to provide a square wave for input to EXSLK_RF. Accordingly, this pin and the PCLBUZ0 pin must be connected, and the XT1 and XT2 pins must be connected to a 32.768-kHz crystal resonator on the user board.

(3) RFCTLEN

This is an enable input pin for controlling the RF unit. The unit is enabled when the signal on the pin is at the high level and disabled when the signal is at the low level, in which case the power supply to the RF internal circuit is cut off.

Pin P130 of the MCU makes a transition to the high level on release from the reset state (changes from low to high), so connect this pin with P130 on the user board.

(4) TXSELH_RF, TXSELL_RF

TXSELL_RF pin outputs low level from starting a packet transmission to starting the next receiving. It is Hi-Z in DEEP_SLEEP mode, and outputs high level in the other period. Connect a pull-down resister equal or over 500 kΩ to TXSELL_RF pin to set low level in DEEP_SLEEP mode.

(5) XTAL1_RF, XTAL2_RF

These pins are connected to a crystal resonator, which provides the base clock signal for the RF transceiver.

Connect a 32-MHz crystal resonator to these pins.

(6) GPIO0, GPIO1, GPIO2, GPIO3

These pins serve as a 4-bit input/output port.

15.2.2 Analog pins

The following describes the analog pin related to the RF transceiver.

(1) ANT

This is the single RF input/output pin for the RF transceiver. It is for connection to a microstripline, which should have an impedance of 50 Ω.

15.3 Configuration of RF Transceiver

The RF transceiver consists of an analog block, digital block, power management block, wakeup circuit block, RF clock generator block, and RF reset circuit block. Figure 15-1 shows a block diagram. Details are explained in the following pages.

Figure 15-1. Block Diagram of RF Transceiver

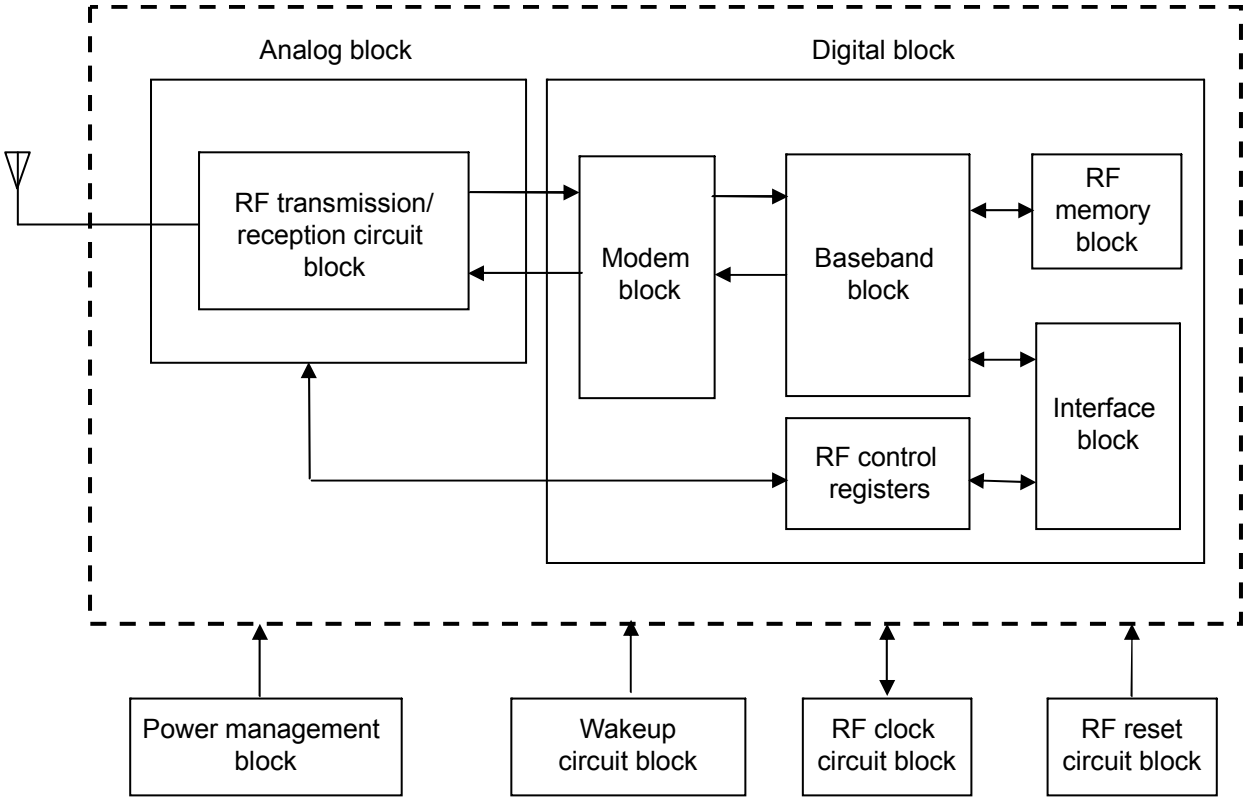

15.3.1 Digital block

The digital blocks consist of a baseband block, an interface block, an RF memory block, an RF control block, and a modem block.

Figure 15-2. Block Diagram of Baseband Block

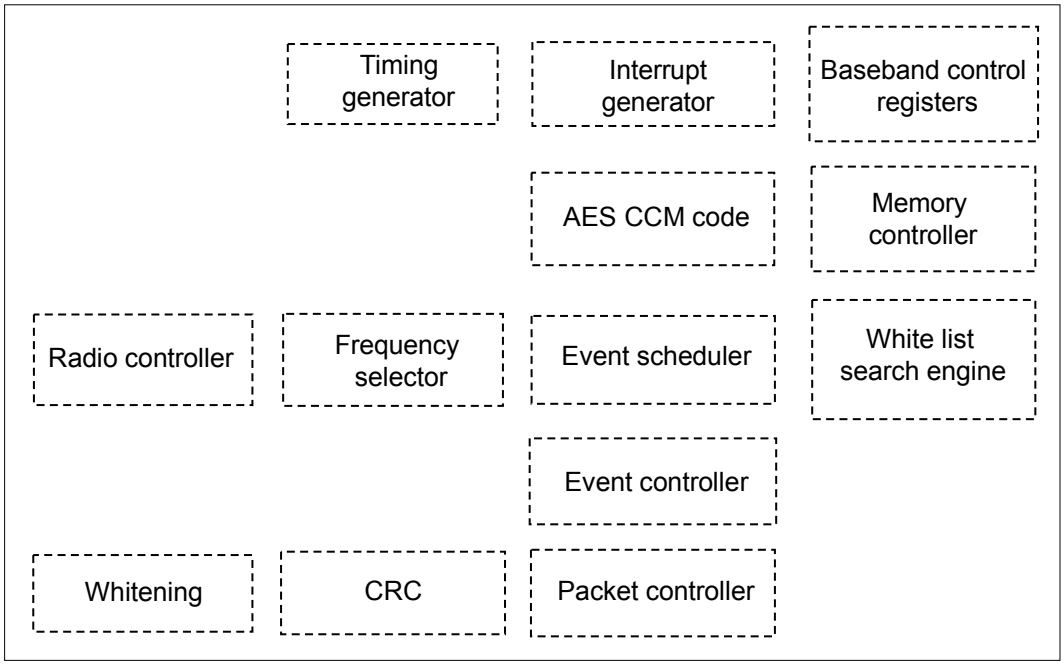

(1) Baseband control registers

Consists of a register group that controls the baseband block.

(2) Memory controller

Controls the interface with the memory block and the memory block itself.

(3) White list search engine

Manages the white list.

(4) Event scheduler

Manages the schedule for performing transmission and reception events.

(5) Event controller

Controls the transmission and reception events.

(6) Packet controller

Generates transmit packets and analyzes receive packets.

(7) Frequency selector

Selects the channel for frequency hopping.

(8) CRC

Operates CRC of the transmit data and receive data.

(9) Radio controller

Controls the RF transmission/reception circuit block.

(10) Whitening

Decodes the whitening of the transmit data and the whitening of the receive data.

(11) Timing generator

Controls the timing of the baseband.

(12) Interrupt generator

Controls interrupts. Table 15-1 lists the interrupt sources.

(13) AES CCM unit

Controls codes.

Table 15-1. Interrupt Sources

Priority[Note]	Interrupt Source Name	Interrupt Source
0	ble_cscnt_irq	625-μs base time interrupt This is generated in 625-μs cycles in active mode.
1	ble_slp_irq	Sleep mode release interrupt This is generated at the wakeup time set in advance.
2	ble_rx_irq	Reception packet interrupt This is generated when a packet has been received.
3	ble_event_irq	Event interrupt This is generated when an advertising, scanning, or connection event finishes.
4	ble_crypt_irq	Encryption/decryption interrupt This is generated when encryption/decryption has been completed or has been controlled from a register.
5	ble_error_irq	Error interrupt This is generated when the MCU and baseband have accessed the same memory space simultaneously (example).
6	ble_grosstgtim_irq	10-ms timer interrupt This is generated when the timer setting has been reached with an accuracy of 10 ms.
7	ble_finetgtim_irq	625-μs timer interrupt This is generated when the timer setting has been reached with an accuracy of 625 μs.
8	ble_radiocntl_irq	Wireless control interrupt, wireless source interrupt This is generated at the transition timing of IDLE_RF → SETUP_RF.

Note This is the priority to be used when more than one interrupt has occurred. 0 is the highest priority and 8 is the lowest priority.

15.3.2 Interface block

This block incorporates an SPI as an internal interface with the MCU.

15.3.3 RF memory block

This block contains SRAM of 16 bits × 1664. This block is accessed from the MCU via the internal interface. Figure 15-3 shows the RF memory map.

The RF memory area is used to control the events and timing of the baseband and specify the transmit/receive packet processing by events, and is used as the buffer for the status of the transmit/receive packet and the transmit/receive data. The PHY block register area has registers for setting the PHY block operation and notifying events. The baseband control register area has registers for setting the baseband block operation and notifying events. Settings are made in these memory map areas through access by the Bluetooth Low Energy protocol stack from Renesas.

Figure 15-3. RF Memory Map

0x31FF 0x2CFD	Cannot be used Note
0x2CFD 0x2000	RF memory area (1664 x 16 bits)
0x1FFF 0x1880	Cannot be used Note
0X187F 0X1800	RF control register area (Retention register)
0x17FF 0x1100	Cannot be used Note
0x11FF 0x1000	RF control register area
0x0FFF 0x0100	Cannot be used Note
0x00FF 0x0000	Baseband control register area

Note Access to this area is prohibited.

15.3.4 RF control register block

This block consists of register groups that control the entire analog block. Access to RF control registers is set by the Bluetooth Low Energy protocol stack made by Renesas.

15.3.5 Modem block

This block mainly consists of modulators and demodulators.

(1) Modulator

Performs GFSK modulation.

(2) Demodulator

Performs FSK demodulation.

15.3.6 Analog block

The analog block consists of the circuits for RF transmission and reception. Figure15-4 shows a block diagram of the RF transmission/reception circuit block.

Figure15-4. RF Transmission/Reception Circuit Block

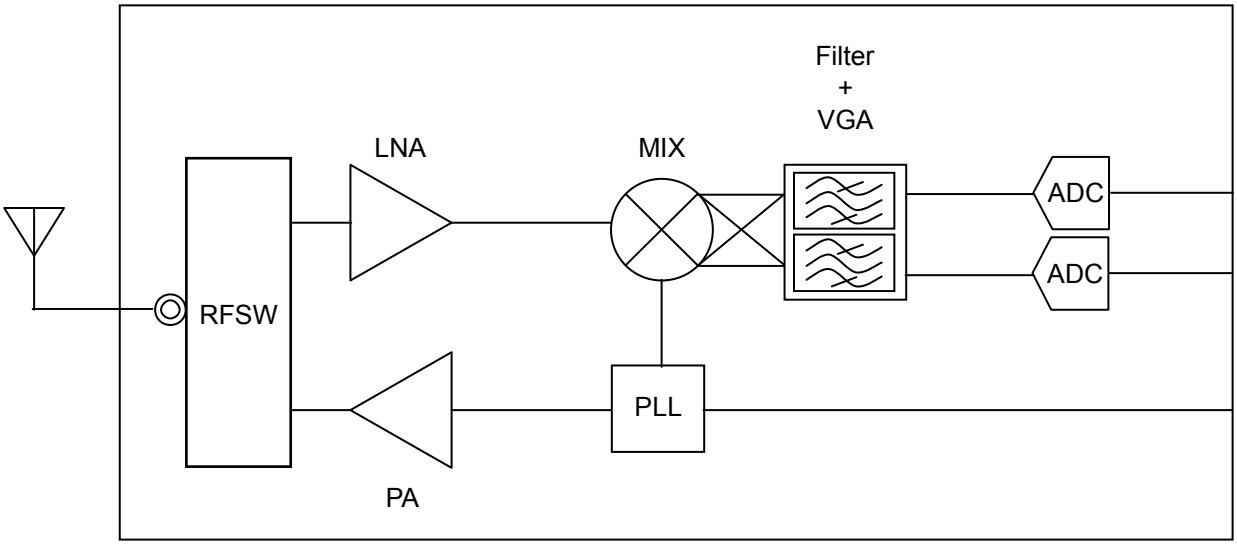

(1) RFSW

When the analog block is operating as a transmitter, the output from the power amplifier (PA) in the transmitter section is sent to the antenna. When it is operating as a receiver, it receives signals input to the antenna and feeds them to the LNA in the reception section.

This block also has a facility for cutting off the signal so that signals do not leak to the reception block during transmission or to the transmission block during reception.

(2) LNA

This circuit is located at the first stage of an analog circuit which receives high-frequency signals fetched at the antenna as the input. When a received signal is very small, this circuit amplifies the signal to prevent noise generated at the subsequent circuitry from degrading the carrier-to-noise ratio (CNR). On the contrary, if the input signal is large, according to the case, the signal level may be adjusted (e.g., attenuated) in order to minimize the signal distortion in the LNA or subsequent circuitry.

(3) MIX

This is a mixer circuit that changes the frequency of high-frequency RF signals output from LNA into base band (BB) signals with low frequency.

(4) Filter

This consists of a filter core unit, tuning unit, capacitor between the mixer filters, capacitor between the filters and VGA, and bias circuit.

(5) Variable gain amplifier (VGA)

This changes the amplitude so that the most suitable amplitude can be provided to the A/D converter which is connected at a subsequent stage of the analog circuit.

(6) ADC

A successive approximation ADC is used.

(7) PLL

Based on the RF base clock, this generates the carrier frequency (2.4-GHz band) to be used in transmission and reception, and supplies 4-phase signals which are each shifted by 90 degrees to MIX and single-ended and single-phase signals to PA.

(8) PA

This power amplifier (PA) is a circuit located as the output stage of the transmission analog circuit unit. It amplifies the electric power of the carriers (carrier waves) sent from the PLL and outputs them to the antenna. The output power is Typ. +0 dBm (50-Ω load) in a 2.4-GHz band. The electric power of the GFSK modulated signals from the PLL is amplified.

15.3.7 Power management block

The power management block consists of a DC-DC converter and a regulator.

(1) DC-DC converter

Equipped with a switching regulator that generates from the power supply (1.8 to 3.6 V) a stabilized power supply for the internal power source.

Using or not using the DC-DC converter is selectable. Using the DC-DC converter allows power-saving operation. Not using the DC-DC converter allows low-voltage operation (1.6 V) and reduces the cost of systems by reducing the number of external components.

(2) Regulator

Six regulators generate stabilized power supply voltages for the digital circuits, ADC, oscillator, PLL, VCO, and RF analog circuits from the external power supply (1.6 to 3.6 V).

15.3.8 Wakeup block

The wakeup block consists of a sleep timer and a power/reset control circuit.

(1) Sleep timer

This timer counts the periods of sleep in DEEP_SLEEP and SLEEP_RF mode in cycles of the RF slow clock.

(2) Power/reset control

Operation of the DC-DC converter and the 32-MHz oscillating circuit is stopped in DEEP_SLEEP mode. This circuit controls the supply of power to the DC-DC converter and 32-MHz oscillating circuit and resetting of the baseband unit when waking up from DEEP_SLEEP mode.

Operation of the DC-DC converter and the 32-MHz oscillating circuit is not stopped in SLEEP_RF mode. There is thus no need to re-supply power to the DC-DC converter and 32-MHz oscillating circuit nor to reset the baseband unit when waking up from SLEEP_RF mode.

15.3.9 RF clock generator circuit block

The RF clock generator circuit block generates and outputs a clock signal for supply to the internal circuits of the RF unit.

This block consists of the RF base clock and RF slow clock generator circuits described below.

(1) RF base clock generator

• XTAL_RF oscillator

This circuit handles the 32-MHz clock signal generated by a 32-MHz resonator connected to the XTAL1_RF and XTAL2_RF pins. The RF base clock signal is supplied to the entire digital baseband block. An oscillation stabilization time is required for oscillation to become stable when it is restarted after having been stopped. The oscillation stabilization time is at least 550 μs, and in general 550 μs + α (where α differs with the oscillator).

(2) RF slow clock generator

<1> On-chip oscillator for the RF slow clock

The RF unit has an on-chip oscillator (f_{ILRF} = 32.768 kHz) to produce the RF slow clock. Using or not using this oscillator is selectable. The signal on the internal EXT32K pin of the RF unit must be driven low to select use of the internal oscillator. Note that this on-chip oscillator cannot be used for any purpose other than the RF slow clock.

<2> External input

A square wave externally input to the EXSLK_RF/GPIO3 pin can also provide the RF slow clock (f_{EXRF} = 32.768 kHz). The signal on the internal EXT32K pin of the RF unit must be driven high to select use of an external oscillator.

(3) RF base clock output circuit

A clock signal obtained by frequency-dividing the RF base clock can be output from the CLKOUT_RF pin. The output clock signal can be disabled or set to 16 MHz, 8 MHz, or 4 MHz. This signal can also be used as the external main system clock of the MCU unit by connecting it to the EXCLK pin. In such cases, this pin and the EXCLK pin must be connected on the user board.

15.3.10 RF reset circuit block

The RF reset circuit block generates a reset signal to reset the internal circuits of the RF unit. This circuit handles the following types of reset.

(1) Pin reset

The reset circuit generates a reset signal to reset the RF internal circuit in response of the input of the low level to $\overline{\text{RESET\_RF}}$.

(2) Wakeup reset

The reset circuit generates a reset signal to reset some of the RF internal circuits when the RF unit wakes up from the DEEP_SLEEP mode.

15.4 RF Modes

15.4.1 RF operation modes

There are the following seven modes for the RF operation mode.

Figure 15-5. List of RF Operating Modes

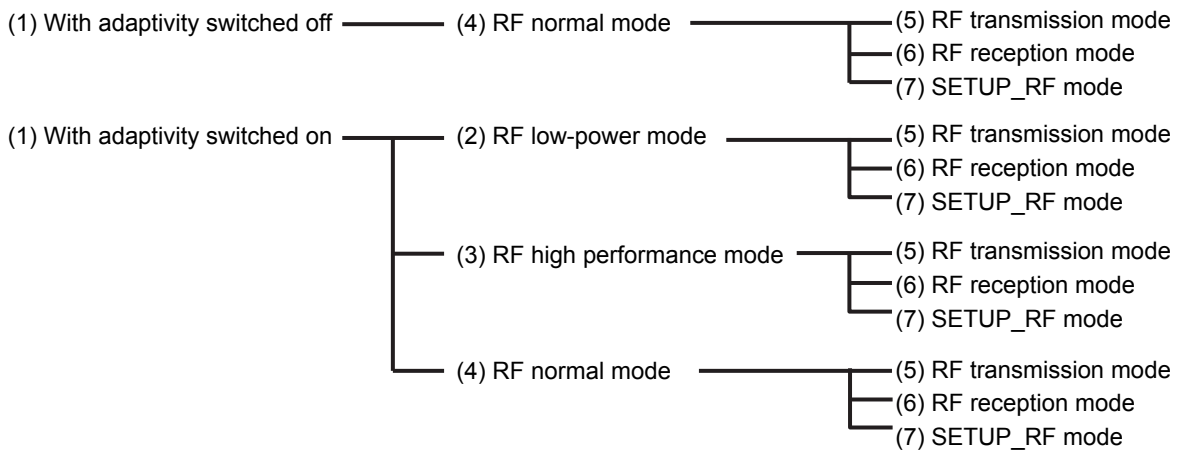

(1) Adaptivity

Adaptivity is exclusively for use in operation as a slave device. When adaptivity is enabled, the signal strength is measured during packet reception and control is applied for transitions to the optimum mode.

There are three power modes: RF low power mode, RF normal mode, and RF high performance mode, which are selected when the signal strength is high, normal, and low, respectively. Sensing and mode transitions are automatic when adaptivity is on.

Since adaptivity cannot be used in operation as a master device, be sure to disable it in operation as a master device.

(2) RF low-power mode

When adaptivity is enabled in operation as a slave device, the signal strength is measured during packet reception. If the signal is strong, the RF unit is automatically placed in RF low-power mode after a packet is received. This mode saves power, and is optimal for applications such as reception over short or middle distances where the signal strength between the master and slave devices is sufficiently high.

(3) RF high performance mode

When adaptivity is enabled in operation as a slave device, the signal strength is measured during packet reception. If the signal strength is low, the RF unit is automatically placed in RF high performance mode after a packet is received.

This mode has improved RF characteristics to handle low signal intensities and is optimal for applications such as reception over middle or long distances where the signal strength between the master and slave devices tends to be low.

(4) RF normal mode

When adaptivity is enabled in operation as a slave device, the signal strength is measured during packet reception. If the signal strength is medium, the RF unit is automatically placed in RF normal mode after a packet is received.

This mode balances the features of the RF low power and high-performance modes, which respectively emphasize saving power and improving the RF characteristics. This mode is optimum for applications such as reception over short or middle distances where the signal strength between the master and slave devices is maintained at a certain level. Note that operation is fixed to this mode when adaptivity is switched off.

(5) RF transmission mode

This mode is for transmitting packets. After going through SETUP_RF mode, a packet is transmitted at the transmission timing of the event period. After packet transmission has been completed, IDLE_RF mode is entered automatically.

(6) RF reception mode

This mode is for receiving packets. After going through SETUP_RF mode, a packet is received at the reception timing of the event period. After packet reception has been completed, IDLE_RF mode is entered automatically.

(7) SETUP_RF mode

This is the setup period for starting up the analog circuit and making it able to perform packet transmission/reception successfully. After setup has been completed successfully, RF transmission mode or RF reception mode is entered automatically by an event.

15.4.2 RF standby modes

There are the following six modes for the RF standby mode.

(1) POWER_DOWN mode
(2) RESET_RF mode
(3) STANDBY_RF mode
(4) IDLE_RF mode
(5) DEEP_SLEEP mode
(6) SLEEP_RF mode

(1) POWER_DOWN mode

The first mode to be entered after power is supplied. Though power is being supplied, it is not yet being supplied to the internal circuits. All digital pins of the RF unit are in the high-impedance state and only the RFCTLEN pin (input pin) can accept input signals.

The RF unit consumes the least power in this mode. Input of the low level on the RFCTLEN pin causes a transition to this mode from any state.

(2) RESET_RF mode

In this mode, power is not supplied to the internal circuits other than the RF slow clock generator and RF reset circuits. All digital pins of the RF unit other than the RFCTLEN and EXSLK_RF pins are in the high-impedance state.

This mode can be entered from the following two states.

- In POWER_DOWN mode, when the RFCTLEN pin input changes from low to high, this mode is entered.
- In STANDBY_RF mode, when the CE_RF internal pin input changes from high to low, this mode is entered.

(3) STANDBY_RF mode

On entering this mode, operation of the oscillating circuit for the RF base clock and the DC-DC converter is possible. After this mode is entered, the wait time for oscillation stabilization and DC-DC converter output stabilization is required. Accordingly, during that period, transition to another mode is prohibited. Software should control the period of waiting for oscillation to become stable. The wait time becomes as follows:
Oscillation stabilization wait time: At least 550 μs + α (where α depends on the external oscillation circuit)
DC-DC converter output stabilization wait time: At least 250 μs

This mode can be entered from the following two states.

- In RESET_RF mode, when the CE_RF internal pin input changes from low to high, this mode is entered.
- In IDLE_RF mode, when the $\overline{\text{RESET\_RF}}$ internal pin input changes from high to low, this mode is entered.

(4) IDLE_RF mode

Idle state waiting for a packet transmission/reception event to occur. When an event occurs, the analog circuit is activated and so a transition is made to SETUP_RF mode. After packet transmission or reception has been completed, a transition is made to this mode and idle state is entered again.

This mode can be entered from the following five states.

- In STANDBY_RF mode, when the $\overline{\text{RESET\_RF}}$ internal pin input changes from low to high after waiting for oscillation stabilization, this mode is entered.
- In SLEEP_RF mode, after a SLEEP_RF mode release source is generated, this mode is entered.
- In RF transmission mode, after packet transmission has been completed, this mode is entered.
- In RF reception mode, after packet reception has been completed, this mode is entered.
- In DEEP_SLEEP mode, after a DEEP_SLEEP mode release source is generated, this mode is entered.

(5) DEEP_SLEEP mode

In this mode, the supply of power to circuits other than the RF slow clock and the wakeup circuit used to wake up from DEEP_SLEEP mode is stopped. Therefore, waking up from this mode to enter IDLE_RF mode can proceed after waiting for the oscillation of the RF base clock and the output of the DC-DC converter to become stable. This mode consumes less power than SLEEP_RF mode but it takes more time to wake up from this mode than from SLEEP_RF mode.

This mode can be entered with the following method.

- When a command to enter DEEP_SLEEP mode is issued with the CE_RF internal pin input changing from high to low, this mode is entered.

(6) SLEEP_RF mode

In this mode, operation of circuits other than the RF slow clock and the wakeup circuit used to wake up from SLEEP_RF mode is stopped. The RF unit consumes more power in this mode than in DEEP_SLEEP mode but it takes less time to wake up from this mode than it does from DEEP_SLEEP mode.

This mode can be entered with the following method.

- When a command to enter SLEEP_RF mode is issued, this mode is entered

15.4.3 State transition diagram

Figure 15-6 shows the state transition diagram of the RF modes of the RF transceiver.

Figure 15-6. State Transition Diagram

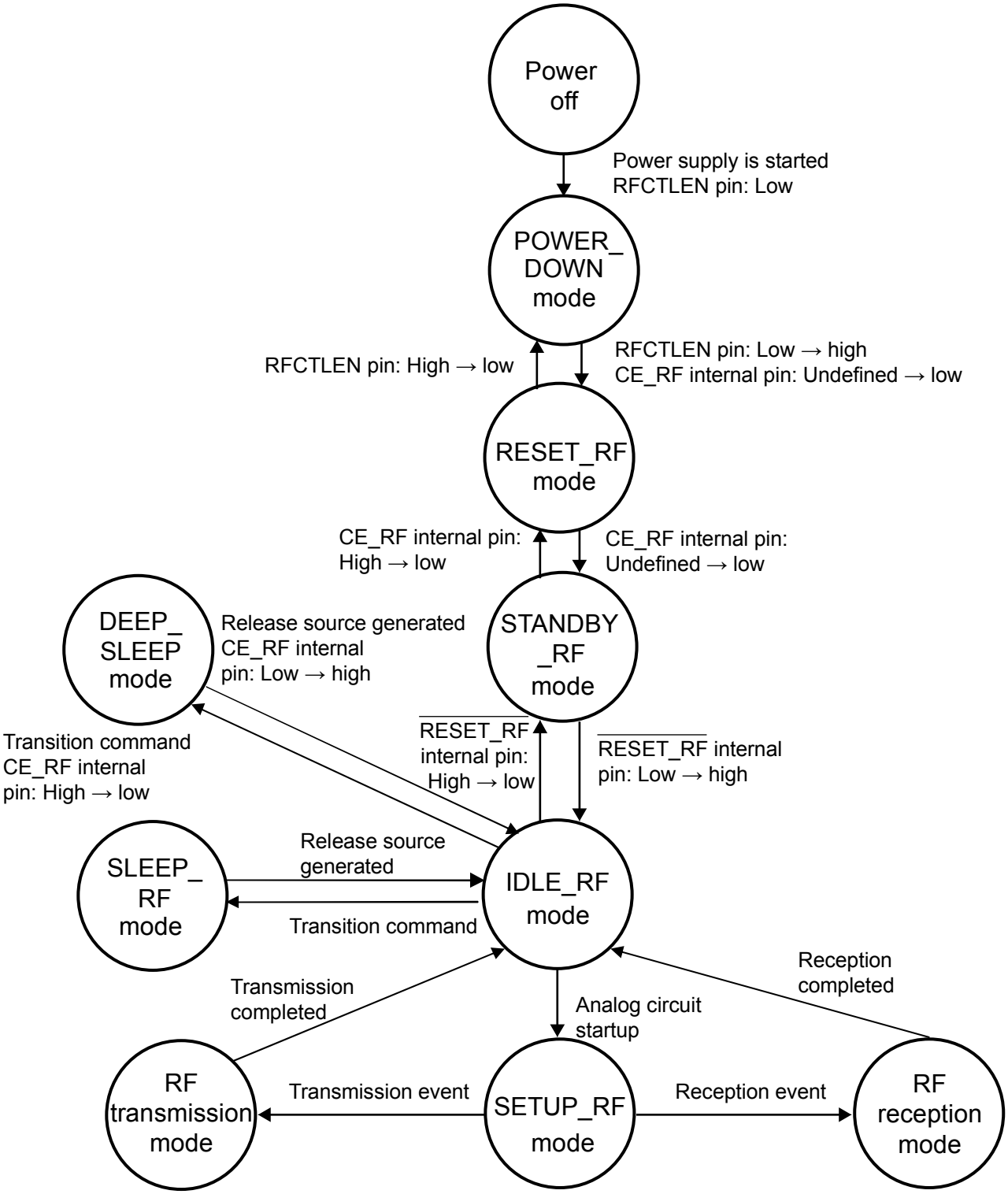

Caution: When the RFCTLEN pin changes from high to low, a transition to a power-down mode is made.

15.4.4 Mode transition time

Table 15-2 shows the mode transition time.

Table 15-2. Mode Transition Time

Mode Transition		Transition Time
Exit from	Entry to	
Power off	POWER_DOWN	The signal on the RFCTLEN pin being at the low level for two cycles of the RF slow clock after the power-supply voltage has 1.6 V from 0 V
POWER_DOWN	RESET_RF	Two cycles of the RF slow clock following a transition of the signal on the RFCTLEN pin from the low to the high level
RESET_RF	POWER_DOWN	Two cycles of the RF slow clock following a transition of the signal on the RFCTLEN pin from the high to the low level
RESET_RF	STANDBY_RF	Two cycles of the RF slow clock following a transition of the signal on the CE_RF pin from the low to the high level After entering STANDBY_RF mode, this mode must be retained for at least the oscillation stabilization time [550 μs + α (where α differs with the oscillator)].
STANDBY_RF	RESET_RF	Two cycles of the RF slow clock following a transition of the signal on the CE_RF pin from the high to the low level
STANDBY_RF	POWER_DOWN	Two cycles of the RF slow clock following a transition of the signal on the RFCTLEN pin from the high to the low level
STANDBY_RF	IDLE_RF	(4 x 1/RF slow clock + 1/RF base clock x 6) following a transition of the signal on the $\overline{\text{RESET\_RF}}$ internal pin from the low to the high level
IDLE_RF	STANDBY_RF	Low width (min.)[Note] of the $\overline{\text{RESET\_RF}}$ internal pin. After entering STANDBY_RF mode, this mode must be retained for at least the oscillation stabilization time [550 μs + α (where α differs with the oscillator)].
IDLE_RF	POWER_DOWN	Two cycles of the RF slow clock following a transition of the signal on the RFCTLEN pin from the high to the low level
IDLE_RF	SLEEP_RF	Within a period of one cycle of the RF slow clock + (1 μs)
SLEEP_RF	IDLE_RF	Within a period of one cycle of the RF base clock following a generation of the interrupt
IDLE_RF	DEEP_SLEEP	Within a period of one cycle of the RF slow clock + (1 μs)
DEEP_SLEEP	IDLE_RF	Within a period of one cycle of the RF base clock following a generation of the interrupt
IDLE_RF	SETUP_RF	1 μs After entering SETUP_RF mode, the duration period is 11 μs.
SETUP_RF	RF transmission	150 μs After entering RF transmission mode, the duration period is max. 376 μs and min. 80 μs.
SETUP_RF	RF reception	150 μs After entering RF reception mode, the duration period is min. 80 μs.
RF transmission	IDLE_RF	3 μs
RF reception	IDLE_RF	1 μs
SETUP_RF	POWER_DOWN	Two cycles of the RF slow clock following a transition of the signal on the RFCTLEN pin from the high to the low level
RF transmission	POWER_DOWN	Two cycles of the RF slow clock following a transition of the signal on the RFCTLEN pin from the high to the low level
RF reception	POWER_DOWN	Two cycles of the RF slow clock following a transition of the signal on the RFCTLEN pin from the high to the low level

Note For the low width and high width, refer to the AC characteristics.

15.4.5 Pin status in each mode

Table 15-3 shows the pin status in each operation mode.

Table 15-3. Pin Status in Each Operation Mode (1/2)

Pin	POWER_DOWN	RESET_RF	STANDBY_RF	IDLE_RF	SETUP_RF
RFCTLEN	Low-level input	High-level input	High-level input	High-level input	High-level input
EXSLK_RF	Don't care	Can be operated	Can be operated	Can be operated	Can be operated
CLKOUT_RF	Hi-Z	Hi-Z	Can be operated	Can be operated	Can be operated
INTOUT_RF	Hi-Z	High-level output	High-level output	High-level output	Can be operated
TXSELH_RF	Hi-Z	Hi-Z	Hi-Z	Can be operated	Can be operated
TXSELL_RF	Hi-Z	Hi-Z	Hi-Z	Can be operated	Can be operated
GPIO[3:0]	Hi-Z	Hi-Z	Can be operated	Can be operated	Can be operated
CE_RF internal pin	Don't care	Low-level input	High-level input	High-level input	High-level input
$\overline{\text{RESET\_RF}}$ internal pin	Don't care	Low-level input	Low-level input	High-level input	High-level input

Table 15-3. Pin Status in Each Operation Mode (2/2)

Pin	RF Transmission	RF Reception	SLEEP_RF	DEEP_SLEEP
RFCTLEN	High-level input	High-level input	High-level input	High-level input
EXSLK_RF	Can be operated	Can be operated	Can be operated	Can be operated
CLKOUT_RF	Can be operated	Can be operated	Can be operated	Hi-Z
INTOUT_RF	Can be operated	Can be operated	Can be operated	High-level output
TXSELH_RF	Can be operated	Can be operated	Can be operated	Hi-Z
TXSELL_RF	Can be operated	Can be operated	Can be operated	Hi-Z
GPIO[3:0]	Can be operated	Can be operated	Can be operated	Hi-Z
CE_RF internal pin	High-level input	High-level input	High-level input	Low-level input
$\overline{\text{RESET\_RF}}$ internal pin	High-level input	High-level input	High-level input	High-level input

15.4.6 Function status in each mode

Table 15-4 shows the function status in each operation mode.

Table 15-4. Function Status in Each Operation Mode (1/2)

Function	POWER_DOWN	RESET_RF	STANDBY_RF	IDLE_RF	SETUP_RF
Regulator for RF oscillation circuit	Operation disabled	Operation disabled	Operating	Operating	Operating
Regulator for PLL circuit	Operation disabled	Operation disabled	Operation stopped	Operation stopped	Operating
Regulator for ADC circuit	Operation disabled	Operation disabled	Operation stopped	Operation stopped	Operating
Regulator for VCO circuit	Operation disabled	Operation disabled	Operation stopped	Operation stopped	Operating
Regulator for RF digital circuit	Operation disabled	Operation disabled	Operating	Operating	Operating
Regulator for RF analog circuit	Operation disabled	Operation disabled	Operation stopped	Operation stopped	Operating
Digital block	Operation disabled	Operation disabled	Operation stopped	Operating	Operating
Analog block	Operation disabled	Operation disabled	Operation stopped	Operation stopped	Operating
Wakeup circuit	Operation disabled	Operation disabled	Operation stopped	Operation possible	Operation possible
RF clock generator RF base clock	Operation disabled	Operation stopped	Operating	Operating	Operating
RF clock generator RF slow clock	Operation disabled	Operating	Operating	Operating	Operating
RF base clock output circuit	Operation disabled	Operation disabled	Operation possible	Operation possible	Operation possible
RF reset circuit	Operation disabled	Operating	Operating	Operating	Operating

Table 15-4. Function Status in Each Operation Mode (2/2)

Function	RF Transmission	RF Reception	SLEEP_RF	DEEP_SLEEP
Regulator for RF oscillation circuit	Operating	Operating	Operating	Operating (partly)
Regulator for PLL circuit	Operating	Operating	Operation stopped	Operation stopped
Regulator for ADC circuit	Operating	Operating	Operation stopped	Operation stopped
Regulator for VCO circuit	Operating	Operating	Operation stopped	Operation stopped
Regulator for RF digital circuit	Operating	Operating	Operating	Operating
Regulator for RF analog circuit	Operating	Operating	Operation stopped	Operation stopped
DC-DC converter	Operating	Operating	Operating	Operation stopped
Digital block	Operating	Operating	Operation stopped	Operation disabled
Analog block	Operating	Operating	Operation stopped	Operation stopped
Wakeup circuit	Operation stopped	Operation stopped	Operating	Operating
RF clock generator RF base clock	Operating	Operating	Operating	Operation stopped
RF clock generator RF slow clock	Operating	Operating	Operating	Operating
RF base clock output circuit	Operation possible	Operation possible	Operation possible	Operation possible
RF reset circuit	Operating	Operating	Operating	Operating (partly)

CHAPTER 16 MULTIPLIER AND DIVIDER/MULTIPLY-ACCUMULATOR

16.1 Functions of Multiplier and Divider/Multiply-Accumulator

The multiplier and divider/multiply-accumulator has the following functions.

- 16 bits × 16 bits = 32 bits (Unsigned)
- 16 bits × 16 bits = 32 bits (Signed)
- 16 bits × 16 bits + 32 bits = 32 bits (Unsigned)
- 16 bits × 16 bits + 32 bits = 32 bits (Signed)
- 32 bits ÷ 32 bits = 32 bits, 32-bits remainder (Unsigned)

16.2 Configuration of Multiplier and Divider/Multiply-Accumulator

The multiplier and divider/multiply-accumulator consists of the following hardware.

Table 16-1. Configuration of Multiplier and Divider/Multiply-Accumulator

Item	Configuration
Registers	Multiplication/division data register A (L) (MDAL) Multiplication/division data register A (H) (MDAH) Multiplication/division data register B (L) (MDBL) Multiplication/division data register B (H) (MDBH) Multiplication/division data register C (L) (MDCL) Multiplication/division data register C (H) (MDCH)
Control register	Multiplication/division control register (MDUC)

Figure 16-1 shows a block diagram of the multiplier and divider/multiply-accumulator.

Figure 16-1. Block Diagram of Multiplier and Divider/Multiply-Accumulator

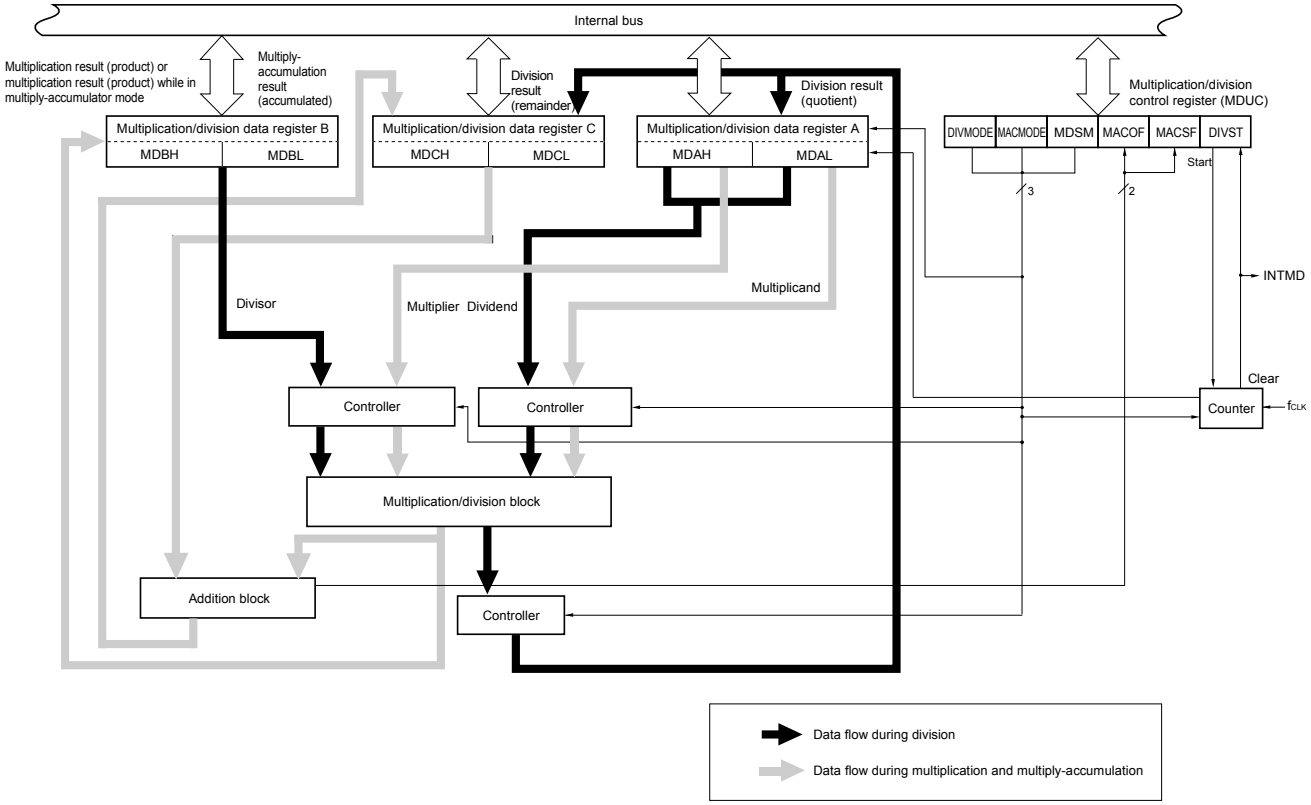

Remark f_{CLK}: CPU/peripheral hardware clock frequency

16.2.1 Multiplication/division data register A (MDAH, MDAL)

The MDAH and MDAL registers set the values that are used for a multiplication or division operation and store the operation result. They set the multiplier and multiplicand data in the multiplication mode or multiply-accumulator mode, and set the dividend data in the division mode. Furthermore, the operation result (quotient) is stored in the MDAH and MDAL registers in the division mode.

The MDAH and MDAL registers can be set by a 16-bit manipulation instruction.

Reset signal generation clears these registers to 0000H.

Figure 16-2. Format of Multiplication/Division Data Register A (MDAH, MDAL)

Address: FFFF0H, FFFF1H, FFFF2H, FFFF3H After reset: 0000H, 0000H R/W

Symbol	FFFF3H								FFFF2H							
MDAH	MDAH 15	MDAH 14	MDAH 13	MDAH 12	MDAH 11	MDAH 10	MDAH 9	MDAH 8	MDAH 7	MDAH 6	MDAH 5	MDAH 4	MDAH 3	MDAH 2	MDAH 1	MDAH 0

Symbol	FFFF1H								FFFF0H							
MDAL	MDAL 15	MDAL 14	MDAL 13	MDAL 12	MDAL 11	MDAL 10	MDAL 9	MDAL 8	MDAL 7	MDAL 6	MDAL 5	MDAL 4	MDAL 3	MDAL 2	MDAL 1	MDAL 0

Cautions 1. Do not rewrite the MDAH and MDAL registers values during division operation processing (when the multiplication/division control register (MDUC) value is 81H or C1H). The operation will be executed in this case, but the operation result will be an undefined value.

2. The MDAH and MDAL registers values read during division operation processing (when the MDUC register value is 81H or C1H) will not be guaranteed.

3. The data is in the two's complement format in either the multiplication mode (signed) or multiply-accumulator mode (signed).

The following table shows the functions of the MDAH and MDAL registers during operation execution.

Table 16-2. Functions of MDAH and MDAL Registers During Operation Execution

Operation Mode	Setting	Operation Result
Multiplication mode (unsigned) Multiply-accumulator mode (unsigned)	MDAH: Multiplier (unsigned) MDAL: Multiplicand (unsigned)	–
Multiplication mode (signed) Multiply-accumulator mode (signed)	MDAH: Multiplier (signed) MDAL: Multiplicand (signed)	–
Division mode (unsigned)	MDAH: Dividend (unsigned) (higher 16 bits) MDAL: Dividend (unsigned) (lower 16 bits)	MDAH: Division result (unsigned) Higher 16 bits MDAL: Division result (unsigned) Lower 16 bits

16.2.2 Multiplication/division data register B (MDBL, MDBH)

The MDBH and MDBL registers set the values that are used for multiplication or division operation and store the operation result. They store the operation result (product) in the multiplication mode and multiply-accumulator mode, and set the divisor data in the division mode.

The MDBH and MDBL registers can be set by a 16-bit manipulation instruction.

Reset signal generation clears these registers to 0000H.

Figure 16-3. Format of Multiplication/Division Data Register B (MDBH, MDBL)

Address: FFFF4H, FFFF5H, FFFF6H, FFFF7H After reset: 0000H, 0000H R/W

Symbol	FFFF5H								FFFF4H							
MDBH	MDBH 15	MDBH 14	MDBH 13	MDBH 12	MDBH 11	MDBH 10	MDBH 9	MDBH 8	MDBH 7	MDBH 6	MDBH 5	MDBH 4	MDBH 3	MDBH 2	MDBH 1	MDBH 0

Symbol	FFFF7H								FFFF6H							
MDBL	MDBL 15	MDBL 14	MDBL 13	MDBL 12	MDBL 11	MDBL 10	MDBL 9	MDBL 8	MDBL 7	MDBL 6	MDBL 5	MDBL 4	MDBHL 3	MDBL 2	MDBL 1	MDBL 0

Cautions 1. Do not rewrite the MDBH and MDBL registers values during division operation processing (when the multiplication/division control register (MDUC) value is 81H or C1H) or multiply-accumulation operation processing. The operation result will be an undefined value.

2. Do not set the MDBH and MDBL registers to 0000H in the division mode. If they are set, the operation result will be an undefined value.

3. The data is in the two's complement format in either the multiplication mode (signed) or multiply-accumulator mode (signed).

The following table shows the functions of the MDBH and MDBL registers during operation execution.

Table 16-3. Functions of MDBH and MDBL Registers During Operation Execution

Operation Mode	Setting	Operation Result
Multiplication mode (unsigned) Multiply-accumulator mode (unsigned)	–	MDBH: Multiplication result (product) (unsigned) Higher 16 bits MDBL: Multiplication result (product) (unsigned) Lower 16 bits
Multiplication mode (signed) Multiply-accumulator mode (signed)	–	MDBH: Multiplication result (product) (signed) Higher 16 bits MDBL: Multiplication result (product) (signed) Lower 16 bits
Division mode (unsigned)	MDBH: Divisor (unsigned) (higher 16 bits) MDBL: Divisor (unsigned) (lower 16 bits)	–

16.2.3 Multiplication/division data register C (MDCL, MDCH)

The MDCH and MDCL registers are used to store the accumulated result while in the multiply-accumulator mode or the remainder of the operation result while in the division mode. These registers are not used while in the multiplication mode.

The MDCH and MDCL registers can be set by a 16-bit manipulation instruction.

Reset signal generation clears these registers to 0000H.

Figure 16-4. Format of Multiplication/Division Data Register C (MDCH, MDCL)

Address: F00E0H, F00E1H, F00E2H, F00E3H After reset: 0000H, 0000H R/W

Symbol	F00E3H								F00E2H							
MDCH	MDCH 15	MDCH 14	MDCH 13	MDCH 12	MDCH 11	MDCH 10	MDCH 9	MDCH 8	MDCH 7	MDCH 6	MDCH 5	MDCH 4	MDCH 3	MDCH 2	MDCH 1	MDCH 0

Symbol	F00E1H								F00E0H							
MDCL	MDCL 15	MDCL 14	MDCL 13	MDCL 12	MDCL 11	MDCL 10	MDCL 9	MDCL 8	MDCL 7	MDCL 6	MDCL 5	MDCL 4	MDCL 3	MDCL 2	MDCL 1	MDCL 0

Cautions 1. The MDCH and MDCL registers values read during division operation processing (when the multiplication/division control register (MDUC) value is 81H or C1H) will not be guaranteed.

2. During multiply-accumulator processing, do not use software to rewrite the values of the MDCH and MDCL registers. If this is done, the operation result will be undefined.

3. The data is in the two's complement format in the multiply-accumulator mode (signed).

Table 16-4. Functions of MDCH and MDCL Registers During Operation Execution

Operation Mode	Setting	Operation Result
Multiplication mode (unsigned or signed)	–	–
Multiply-accumulator mode (unsigned)	MDCH: Initial accumulated value (unsigned) (higher 16 bits) MDCL: Initial accumulated value (unsigned) (lower 16 bits)	MDCH: accumulated value (unsigned) (higher 16 bits) MDCL: accumulated value (unsigned) (lower 16 bits)
Multiply-accumulator mode (signed)	MDCH: Initial accumulated value (signed) (higher 16 bits) MDCL: Initial accumulated value (signed) (lower 16 bits)	MDCH: accumulated value (signed) (higher 16 bits) MDCL: accumulated value (signed) (lower 16 bits)
Division mode (unsigned)	–	MDCH: Remainder (unsigned) (higher 16 bits) MDCL: Remainder (unsigned) (lower 16 bits)

The register configuration differs between when multiplication is executed and when division is executed, as follows.

- Register configuration during multiplication

  <Multiplier A> <Multiplier B> <Product>

  MDAL (bits 15 to 0) × MDAH (bits 15 to 0) = [MDBH (bits 15 to 0), MDBL (bits 15 to 0)]

- Register configuration during multiply-accumulation

  <Multiplier A> <Multiplier B> < accumulated value > < accumulated result >

  MDAL (bits 15 to 0) × MDAH (bits 15 to 0) + MDC (bits 31 to 0) = [MDCH (bits 15 to 0), MDCL (bits 15 to 0)]

  (The multiplication result is stored in the MDBH (bits 15 to 0) and MDBL (bits 15 to 0).)

- Register configuration during division

  <Dividend> <Divisor>

  [MDAH (bits 15 to 0), MDAL (bits 15 to 0)] ÷ [MDBH (bits 15 to 0), MDBL (bits 15 to 0)] =

  <Quotient> <Remainder>

  [MDAH (bits 15 to 0), MDAL (bits 15 to 0)] … [MDCH (bits 15 to 0), MDCL (bits 15 to 0)]

16.3 Register Controlling Multiplier and Divider/Multiply-Accumulator

The multiplier and divider/multiply-accumulator is controlled by using the multiplication/division control register (MDUC).

16.3.1 Multiplication/division control register (MDUC)

The MDUC register is an 8-bit register that controls the operation of the multiplier and divider/multiply-accumulator.

The MDUC register can be set by a 1-bit or 8-bit memory manipulation instruction.

Note that the overflow flag (MACOF) and sign flag (MACSF) of the multiply-accumulation result (accumulated) are read-only flags.

Reset signal generation clears this register to 00H.

Figure 16-5. Format of Multiplication/Division Control Register (MDUC)

Address: F00E8H After reset: 00H R/W[Note 1]

Symbol	<7>	<6>	5	4	<3>	<2>	<1>	<0>
MDUC	DIVMODE	MACMODE	0	0	MDSM	MACOF	MACSF	DIVST

DIVMODE	MACMODE	MDSM	Operation mode selection
0	0	0	Multiplication mode (unsigned) (default)
0	0	1	Multiplication mode (signed)
0	1	0	Multiply-accumulator mode (unsigned)
0	1	1	Multiply-accumulator mode (signed)
1	0	0	Division mode (unsigned), generation of a division completion interrupt (INTMD)
1	1	0	Division mode (unsigned), not generation of a division completion interrupt (INTMD)
Other than above			Setting prohibited

MACOF	Overflow flag of multiply-accumulation result (accumulated value)
0	No overflow
1	With over flow

<Set condition>

- For the multiply-accumulator mode (unsigned)

  The bit is set when the accumulated value goes outside the range from 00000000h to FFFFFFFFh.

- For the multiply-accumulator mode (signed)

  The bit is set when the result of adding a positive product to a positive accumulated value exceeds 7FFFFFFFh and is negative, or when the result of adding a negative product to a negative accumulated value exceeds 80000000h and is positive.

MACSF	Sign flag of multiply-accumulation result (accumulated value)
0	The accumulated value is positive.
1	The accumulated value is negative.

Multiply-accumulator mode (unsigned): The bit is always 0.

Multiply-accumulator mode (signed): The bit indicates the sign bit of the accumulated value.

DIVST[Note 2]	Division operation start/stop
0	Division operation processing complete
1	Starts division operation/division operation processing in progress

Notes 1. Bits 1 and 2 are read-only bits.

2. The DIVST bit can only be set (1) in the division mode. In the division mode, division operation is started by setting (1) the DIVST bit. The DIVST bit is automatically cleared (0) when the operation ends. In the multiplication mode, operation is automatically started by setting the multiplier and multiplicand to multiplication/division data register A (MDAH, MDAL), respectively.

Cautions 1. Do not rewrite the DIVMODE, MDSM bits during operation processing (while the DIVST bit is 1). If it is rewritten, the operation result will be an undefined value.

2. The DIVST bit cannot be cleared (0) by using software during division operation processing (while the DIVST bit is 1).

16.4 Operations of Multiplier and Divider/Multiply-Accumulator

16.4.1 Multiplication (unsigned) operation

- Initial setting
  - <1> Set the multiplication/division control register (MDUC) to 00H.
  - <2> Set the multiplicand to multiplication/division data register A (L) (MDAL).
  - <3> Set the multiplier to multiplication/division data register A (H) (MDAH).
    (There is no preference in the order of executing steps <2> and <3>. Multiplication operation is automatically started when the multiplier and multiplicand are set to the MDAH and MDAL registers, respectively.)
- During operation processing
  - <4> Wait for at least one clock. The operation will end when one clock has been issued.
- Operation end
  - <5> Read the product (lower 16 bits) from multiplication/division data register B (L) (MDBL).
  - <6> Read the product (higher 16 bits) from multiplication/division data register B (H) (MDBH).
    (There is no preference in the order of executing steps <5> and <6>.)
- Next operation
  - <7> Start with the initial settings of each step to change the operation mode. When the same operation mode is used sequentially, settings <1> and <2> can be omitted.

Remark Steps <1> to <7> correspond to <1> to <7> in Figure 16-6.

Figure 16-6. Timing Diagram of Multiplication (Unsigned) Operation (2 × 3 = 6)

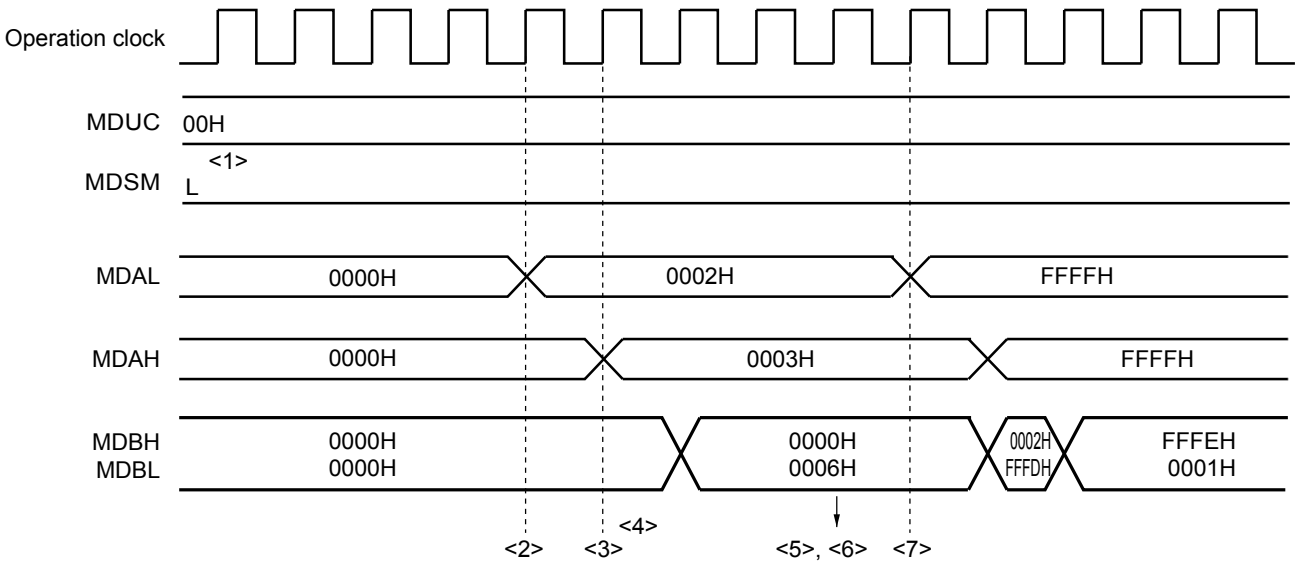

16.4.2 Multiplication (signed) operation

- Initial setting
  - <1> Set the multiplication/division control register (MDUC) to 08H.
  - <2> Set the multiplicand to multiplication/division data register A (L) (MDAL).
  - <3> Set the multiplier to multiplication/division data register A (H) (MDAH).
    (There is no preference in the order of executing steps <2> and <3>. Multiplication operation is automatically started when the multiplier and multiplicand are set to the MDAH and MDAL registers, respectively.)
- During operation processing
  - <4> Wait for at least one clock. The operation will end when one clock has been issued.
- Operation end
  - <5> Read the product (lower 16 bits) from multiplication/division data register B (L) (MDBL).
  - <6> Read the product (higher 16 bits) from multiplication/division data register B (H) (MDBH).
    (There is no preference in the order of executing steps <5> and <6>.)
- Next operation
  - <7> Start with the initial settings of each step to change the operation mode. When the same operation mode is used sequentially, settings <1> and <2> can be omitted.

Caution The data is in the two's complement format in multiplication mode (signed).

Remark Steps <1> to <7> correspond to <1> to <7> in Figure 16-7.

Figure 16-7. Timing Diagram of Multiplication (Signed) Operation (–2 × 32767 = –65534)

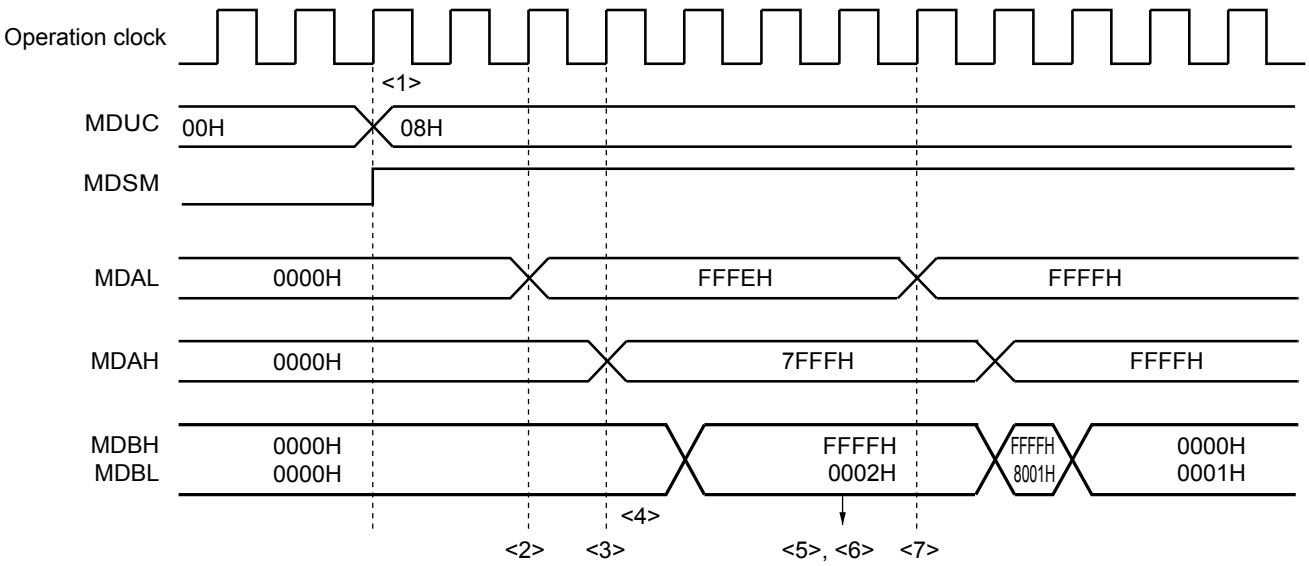

16.4.3 Multiply-accumulation (unsigned) operation

- Initial setting

  <1> Set the multiplication/division control register (MDUC) to 40H.

  <2> Set the initial accumulated value of higher 16 bits to multiplication/division data register C (L) (MDCL).

  <3> Set the initial accumulated value of lower 16 bits to multiplication/division data register C (H) (MDCH).

  <4> Set the multiplicand to multiplication/division data register A (L) (MDAL).

  <5> Set the multiplier to multiplication/division data register A (H) (MDAH).

  (There is no preference in the order of executing steps <2>, <3>, and <4>. Multiplication operation is automatically started when the multiplier is set to the MDAH register, respectively.)

- During operation processing

  <6> The multiplication operation finishes in one clock cycle.

  (The multiplication result is stored in multiplication/division data register B (L) (MDBL) and multiplication/division data register B (H) (MDBH).)

  <7> After <6>, the multiply-accumulation operation finishes in one additional clock cycle. (There is a wait of at least two clock cycles after specifying the initial settings is finished (<5>).)

- Operation end

  <8> Read the accumulated value (lower 16 bits) from the MDCL register.

  <9> Read the accumulated value (higher 16 bits) from the MDCH register.

  (There is no preference in the order of executing steps <8> and <9>.)

  (<10> If the result of the multiply-accumulation operation causes an overflow, the MACOF bit is set to 1, INTMD signal is occurred.)

- Next operation

  <11> Start with the initial settings of each step to change the operation mode. When the same operation mode is used sequentially, settings <1> to <4> can be omitted.

Remark Steps <1> to <10> correspond to <1> to <10> in Figure 16-8.

Figure 16-8. Timing Diagram of Multiply-Accumulation (Unsigned) Operation
(2 × 3 + 3 = 9 → 32767 × 2 + 4294901762 = 0 (over flow generated))

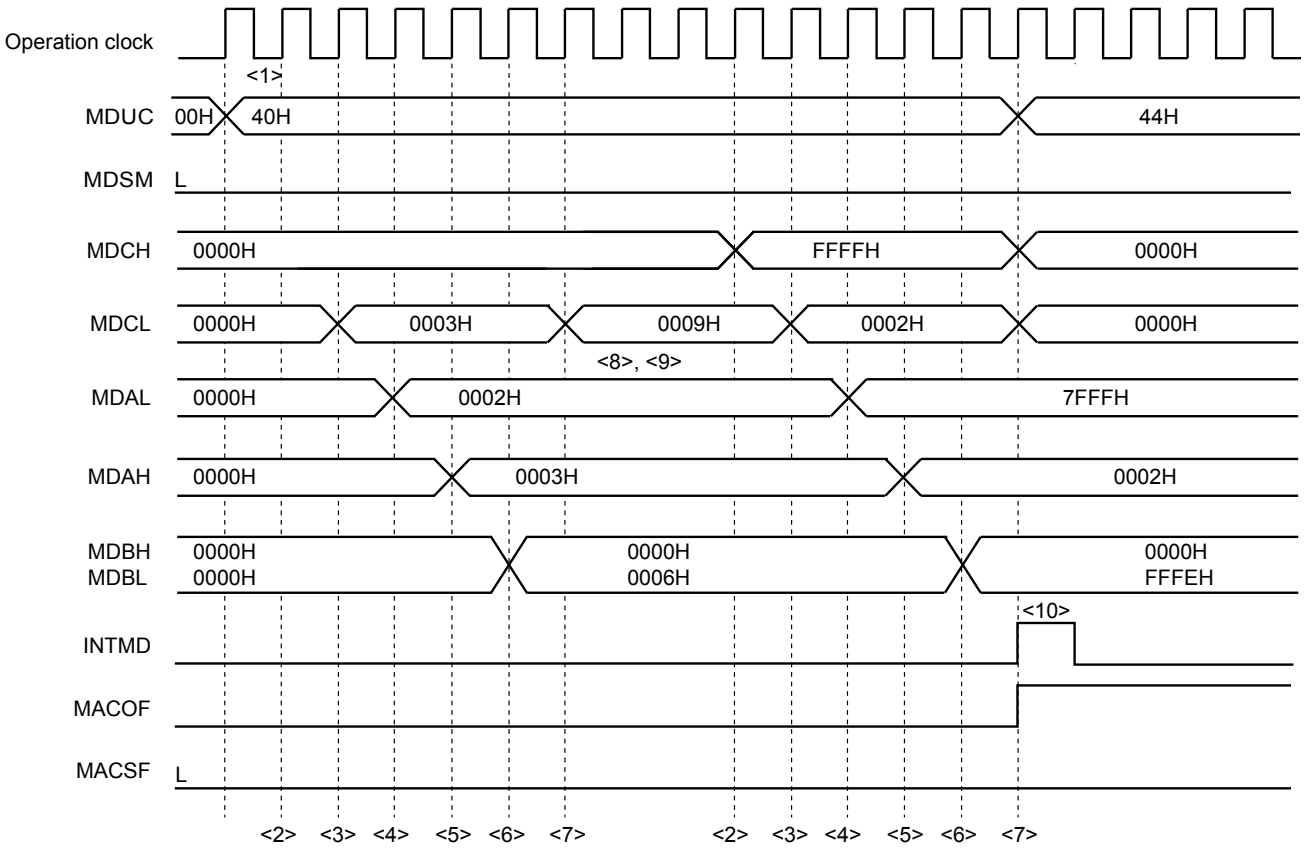

16.4.4 Multiply-accumulation (signed) operation

- Initial setting

  <1> Set the multiplication/division control register (MDUC) to 48H.

  <2> Set the initial accumulated value of higher 16 bits to multiplication/division data register C (H) (MDCH).
  (<3> If the accumulated value in the MDCH register is negative, the MACSF bit is set to 1.)

  <4> Set the initial accumulated value of lower 16 bits to multiplication/division data register C (L) (MDCL).

  <5> Set the multiplicand to multiplication/division data register A (L) (MDAL).

  <6> Set the multiplier to multiplication/division data register A (H) (MDAH).
  (There is no preference in the order of executing steps <2>, <4>, and <5>. Multiplication operation is automatically started when the multiplier is set to the MDAH register of <6>, respectively.)

- During operation processing

  <7> The multiplication operation finishes in one clock cycle.
  (The multiplication result is stored in multiplication/division data register B (L) (MDBL) and multiplication/division data register B (H) (MDBH).)

  <8> After <7>, the multiply-accumulation operation finishes in one additional clock cycle. (There is a wait of at least two clock cycles after specifying the initial settings is finished (<6>).)

- Operation end

  <9> If the accumulated value stored in the MDCL and MDCH registers is positive, the MACSF bit is cleared to 0.

  <10> Read the accumulated value (lower 16 bits) from the MDCL register.

  <11> Read the accumulated value (higher 16 bits) from the MDCH register.
  (There is no preference in the order of executing steps <10> and <11>.)

  (<12> If the result of the multiply-accumulation operation causes an overflow, the MACOF bit is set to 1, INTMD signal is occurred.)

- Next operation

  <13> Start with the initial settings of each step to change the operation mode. When the same operation mode is used sequentially, settings <1> to <5> can be omitted.

Caution The data is in the two's complement format in multiply-accumulation (signed) operation.

Remark Steps <1> to <12> correspond to <1> to <12> in Figure 16-9.

Figure 16-9. Timing Diagram of Multiply-Accumulation (signed) Operation
(2 × 3 + (–4) = 2 → 32767 × (–1) + (–2147483647) = –2147450882 (overflow occurs.))

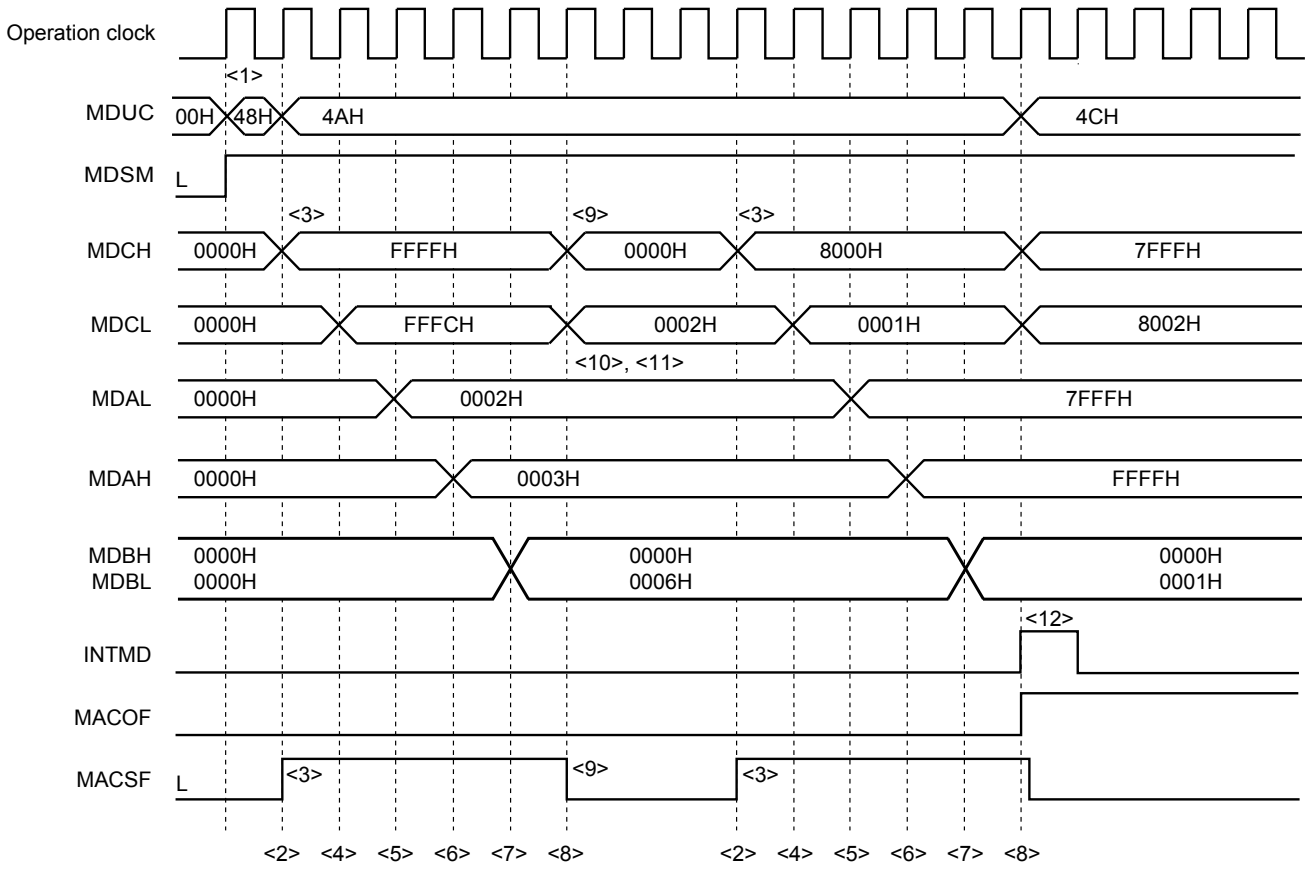

16.4.5 Division operation

- Initial setting

  <1> Set the multiplication/division control register (MDUC) to 80H.

  <2> Set the dividend (higher 16 bits) to multiplication/division data register A (H) (MDAH).

  <3> Set the dividend (lower 16 bits) to multiplication/division data register A (L) (MDAL).

  <4> Set the divisor (higher 16 bits) to multiplication/division data register B (H) (MDBH).

  <5> Set the divisor (lower 16 bits) to multiplication/division data register B (L) (MDBL).

  <6> Set bit 0 (DIVST) of the MDUC register to 1.

  (There is no preference in the order of executing steps <2> to <5>.)

- During operation processing

  <7> The operation will end when one of the following processing is completed.

  - A wait of at least 16 clocks (The operation will end when 16 clocks have been issued.)
  - A check whether the DIVST bit has been cleared

  (The read values of the MDBL, MDBH, MDCL, and MDCH registers during operation processing are not guaranteed.)

- Operation end

  <8> The DIVST bit is cleared and the operation ends. At this time, an interrupt request signal (INTMD) is generated if the operation was performed with MACMODE = 0.

  <9> Read the quotient (lower 16 bits) from the MDAL register.

  <10> Read the quotient (higher 16 bits) from the MDAH register.

  <11> Read the remainder (lower 16 bits) from multiplication/division data register C (L) (MDCL).

  <12> Read the remainder (higher 16 bits) from multiplication/division data register C (H) (MDCH).

  (There is no preference in the order of executing steps <9> to <12>.)

- Next operation

  <13> Start with the initial settings of each step to change the operation mode. When the same operation mode is used sequentially, settings <1> to <5> can be omitted.

Remark Steps <1> to <12> correspond to <1> to <12> in Figure 16-10.

Figure 16-10. Timing Diagram of Division Operation (Example: 35 ÷ 6 = 5, Remainder 5)

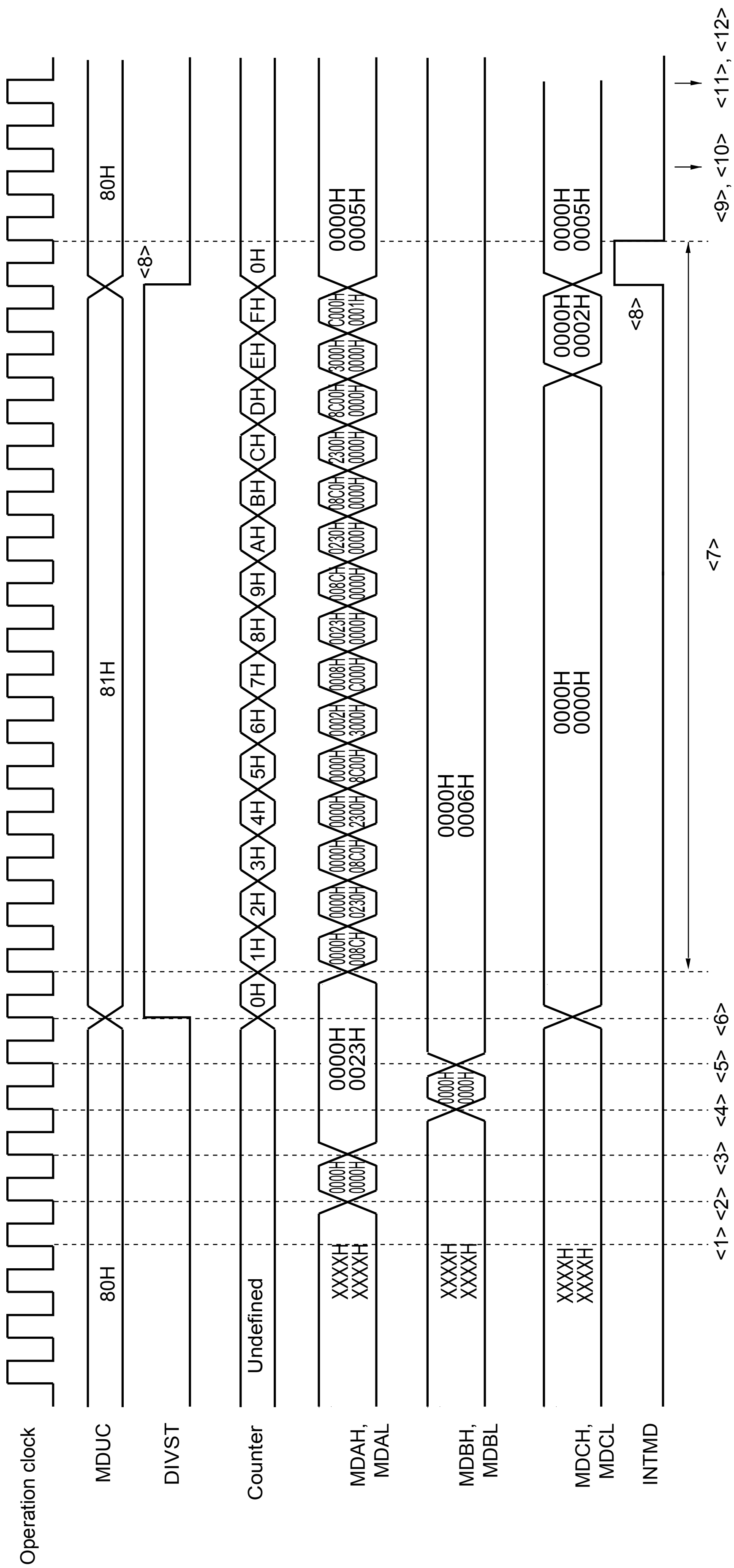

CHAPTER 17 DMA CONTROLLER

The RL78/G1D has an internal DMA (Direct Memory Access) controller.

Data can be automatically transferred between the peripheral hardware supporting DMA, SFRs, and internal RAM without via CPU.

As a result, the normal internal operation of the CPU and data transfer can be executed in parallel with transfer between the SFR and internal RAM, and therefore, a large capacity of data can be processed. In addition, real-time control using communication, timer, and A/D can also be realized.

17.1 Functions of DMA Controller

- O Number of DMA channels: 4 channels
- O Transfer unit: 8 or 16 bits
- O Maximum transfer unit: 1024 times
- O Transfer type: 2-cycle transfer (One transfer is processed in 2 clocks and the CPU stops during that processing.)
- O Transfer mode: Single-transfer mode
- O Transfer request: Selectable from the following peripheral hardware interrupts
  - ● A/D converter
  - ● Serial interface
    (CSI00, CSI20, CSI21, UART0, and UART1)
  - ● Timer (channel 0, 1, 2, or 3)
- O Transfer target: Between SFR and internal RAM

Here are examples of functions using DMA.

- ● Successive transfer of serial interface
- ● Consecutive capturing of A/D conversion results
- ● Capturing A/D conversion result at fixed interval
- ● Capturing port value at fixed interval

17.2 Configuration of DMA Controller

The DMA controller includes the following hardware.

Table 17-1. Configuration of DMA Controller

Item	Configuration
Address registers	● DMA SFR address registers 0 to 3 (DSA0 to DSA3) ● DMA RAM address registers 0 to 3 (DRA0 to DRA3)
Count register	● DMA byte count registers 0 to 3 (DBC0 to DBC3)
Control registers	● DMA mode control registers 0 to 3 (DMC0 to DMC3) ● DMA operation control register 0 to 3 (DRC0 to DRC3)

17.2.1 DMA SFR address register n (DSAn)

This is an 8-bit register that is used to set an SFR address that is the transfer source or destination of DMA channel n.
Set the lower 8 bits of the SFR addresses FFF00H to FFFFFH.
This register is not automatically incremented but fixed to a specific value.
In the 16-bit tran
sfer mode, the least significant bit is ignored and is treated as an even address.
The DSAn register can be read or written in 8-bit units. However, it cannot be written during DMA transfer.
Reset signal generation clears this register to 00H.

Figure 17-1. Format of DMA SFR Address Register n (DSAn)

Address: FFFB0H (DSA0), FFFB1H (DSA1), F0200H (DSA2), F0201H (DSA3) After reset: 00H R/W

	7	6	5	4	3	2	1	0
DSAn								

Remark n: DMA channel number (n = 0 to 3)

17.2.2 DMA RAM address register n (DRAn)

This is a 16-bit register that is used to set a RAM address that is the transfer source or destination of DMA channel n.

Addresses of the internal RAM area other than the general-purpose registers (see **Table 17-2**) can be set to this register.

Set the lower 16 bits of the RAM address.

This register is automatically incremented when DMA transfer has been started. It is incremented by +1 in the 8-bit transfer mode and by +2 in the 16-bit transfer mode. DMA transfer is started from the address set to this DRAn register. When the data of the last address has been transferred, the DRAn register stops with the value of the last address +1 in the 8-bit transfer mode, and the last address +2 in the 16-bit transfer mode.

In the 16-bit transfer mode, the least significant bit is ignored and is treated as an even address.

The DRAn register can be read or written in 8-bit or 16-bit units. However, it cannot be written during DMA transfer.

Reset signal generation clears this register to 0000H.

Figure 17-2. Format of DMA RAM Address Register n (DRAn)

Address: FFFB2H, FFFB3H (DRA0), FFFB4H, FFFB5H (DRA1) , F0202H, F0203H (DRA2), F0204H, F0205H (DRA3) After reset: 0000H R/W

DRA0H: FFFB3H	DRA0L: FFFB2H
DRA1H: FFFB5H	DRA1L: FFFB4H
DRA2H: F0203H	DRA2L: F0202H
DRA3H: F0205H	DRA3L: F0204H

	15	14	13	12	11	10	9	8	7	6	5	4	3	2	1	0
DRAn																

(n = 0 to 3)

Table 17-2 Internal RAM Area other than the General-purpose Registers

Part Number	Internal RAM Area other than the General-purpose Registers
R5F11AGG	FCF00H to FFEDFH
R5F11AGH	FBF00H to FFEDFH
R5F11AGJ	FAF00H to FFEDFH

Remark n: DMA channel number (n = 0 to 3)

17.2.3 DMA byte count register n (DBCn)

This is a 10-bit register that is used to set the number of times DMA channel n executes transfer. Be sure to set the number of times of transfer to this DBCn register before executing DMA transfer (up to 1024 times).

Each time DMA transfer has been executed, this register is automatically decremented. By reading this DBCn register during DMA transfer, the remaining number of times of transfer can be learned.

The DBCn register can be read or written in 8-bit or 16-bit units. However, it cannot be written during DMA transfer.

Reset signal generation clears this register to 0000H.

Figure 17-3. Format of DMA Byte Count Register n (DBCn)

Address: FFFB6H, FFFB7H (DBC0), FFFB8H, FFFB9H (DBC1) After reset: 0000H R/W
F0206H, F0207H (DBC2), F0208H, F0209H (DBC3)

DBC0H: FFFB7H
DBC1H: FFFB9H
DBC2H: F0207H
DBC3H: F0209H

DBC0L: FFFB6H
DBC1L: FFFB8H
DBC2L: F0206H
DBC3L: F0208H

	15	14	13	12	11	10	9	8	7	6	5	4	3	2	1	0
DBCn	0	0	0	0	0	0										

(n = 0 to 3)

DBCn[9:0]	Number of Times of Transfer (When DBCn is Written)	Remaining Number of Times of Transfer (When DBCn is Read)
000H	1024	Completion of transfer or waiting for 1024 times of DMA transfer
001H	1	Waiting for remaining one time of DMA transfer
002H	2	Waiting for remaining two times of DMA transfer
003H	3	Waiting for remaining three times of DMA transfer
• • •	• • •	• • •
3FEH	1022	Waiting for remaining 1022 times of DMA transfer
3FFH	1023	Waiting for remaining 1023 times of DMA transfer

Cautions 1. Be sure to clear bits 15 to 10 to "0".

2. If the general-purpose register is specified or the internal RAM space is exceeded as a result of continuous transfer, the general-purpose register or SFR space are written or read, resulting in loss of data in these spaces. Be sure to set the number of times of transfer that is within the internal RAM space.

Remark n: DMA channel number (n = 0 to 3)

17.3 Registers Controlling DMA Controller

DMA controller is controlled by the following registers.

- DMA mode control register n (DMCn)
- DMA operation control register n (DRCn)

Remark n: DMA channel number (n = 0 to 3)

17.3.1 DMA mode control register n (DMCn)

The DMCn register is a register that is used to set a transfer mode of DMA channel n. It is used to select a transfer direction, data size, setting of pending, and start source. Bit 7 (STGn) is a software trigger that starts DMA.

Rewriting bits 6, 5, and 3 to 0 of the DMCn register is prohibited during operation (when DSTn = 1).

The DMCn register can be set by a 1-bit or 8-bit memory manipulation instruction.

Reset signal generation clears this register to 00H.

Figure 17-4. Format of DMA Mode Control Register n (DMCn) (1/3)

Address: FFFBAH (DMC0), FFFBBH (DMC1), F020AH (DMC2), F020BH (DMC3) After reset: 00H R/W

Symbol	<7>	<6>	<5>	<4>	3	2	1	0
DMCn	STGn	DRSn	DSn	DWAITn	IFCn3	IFCn2	IFCn1	IFCn0

STGn[Note 1]	DMA transfer start software trigger
0	No trigger operation
1	DMA transfer is started when DMA operation is enabled (DENn = 1).
DMA transfer is performed once by writing 1 to the STGn bit when DMA operation is enabled (DENn = 1). When this bit is read, 0 is always read.	

DRSn	Selection of DMA transfer direction
0	SFR to internal RAM
1	Internal RAM to SFR

DSn	Specification of transfer data size for DMA transfer
0	8 bits
1	16 bits

DWAITn[Note 2]	Pending of DMA transfer
0	Executes DMA transfer upon DMA start request (not held pending).
1	Holds DMA start request pending if any.
DMA transfer that has been held pending can be started by clearing the value of the DWAITn bit to 0. It takes 2 clocks to actually hold DMA transfer pending when the value of the DWAITn bit is set to 1.	

Notes 1. The software trigger (STGn) can be used regardless of the IFCn0 to IFCn3 bits values.

2. When DMA transfer is held pending while using two or more DMA channels, be sure to hold the DMA transfer pending for all channels (by setting the DWAIT0, DWAIT1, DWAIT2, and DWAIT3 bits to 1).

Remark n: DMA channel number (n = 0 to 3)

Figure 17-4. Format of DMA Mode Control Register n (DMCn) (2/3)

Address: FFFBAH (DMC0), FFFBBH (DMC1) After reset: 00H R/W

Symbol	<7>	<6>	<5>	<4>	3	2	1	0
DMCn	STGn	DRSn	DSn	DWAITn	IFCn3	IFCn2	IFCn1	IFCn0

(When n = 0 or 1)

IFCn 3	IFCn 2	IFCn 1	IFCn 0	Selection of DMA start source[Note]	
				Trigger signal	Trigger contents
0	0	0	0	–	Disables DMA transfer by interrupt. (Only software trigger is enabled.)
0	0	0	1	INTAD	A/D conversion end interrupt
0	0	1	0	INTTM00	End of timer channel 00 count or capture end interrupt
0	0	1	1	INTTM01	End of timer channel 01 count or capture end interrupt
0	1	0	0	INTTM02	End of timer channel 02 count or capture end interrupt
0	1	0	1	INTTM03	End of timer channel 03 count or capture end interrupt
0	1	1	0	INTST0/INTCSI00	UART0 transmission transfer end or buffer empty interrupt/ CSI00 transfer end or buffer empty interrupt
0	1	1	1	INTSR0	UART0 reception transfer end interrupt
1	0	0	0	INTST1	UART1 transmission transfer end or buffer empty interrupt
1	0	0	1	INTSR1	UART1 reception transfer end interrupt
1	0	1	0	–	CSI20 transfer end or buffer empty interrupt
1	0	1	1	INTCSI21	CSI21 transfer end or buffer empty interrupt
Other than above				Setting prohibited	

Note The software trigger (STGn) can be used regardless of the IFCn0 to IFCn3 bits values.

Remark n: DMA channel number (n = 0, 1)

Figure 17-4. Format of DMA Mode Control Register n (DMCn) (3/3)

Address: F020AH (DMC2), F020BH (DMC3) After reset: 00H R/W

Symbol	<7>	<6>	<5>	<4>	3	2	1	0
DMCn	STGn	DRSn	DSn	DWAITn	IFCn3	IFCn2	IFCn1	IFCn0

(When n = 2 or 3)

IFCn 3	IFCn 2	IFCn 1	IFCn 0	Selection of DMA start source[Note]	
				Trigger signal	Trigger contents
0	0	0	0	–	Disables DMA transfer by interrupt. (Only software trigger is enabled.)
0	0	0	1	INTAD	A/D conversion end interrupt
1	0	0	0	INTST1	UART1 transmission transfer end or buffer empty interrupt
1	0	0	1	INTSR1	UART1 reception transfer end interrupt
1	0	1	0	INTCSI20	CSI20 transfer end or buffer empty interrupt
1	0	1	1	INTCSI21	CSI21 transfer end or buffer empty interrupt
Other than above				Setting prohibited	

Note The software trigger (STGn) can be used regardless of the IFCn0 to IFCn3 bits values.

Remark n: DMA channel number (n = 2, 3)

17.3.2 DMA operation control register n (DRCn)

The DRCn register is a register that is used to enable or disable transfer of DMA channel n.

Rewriting bit 7 (DENn) of this register is prohibited during operation (when DSTn = 1).

The DRCn register can be set by a 1-bit or 8-bit memory manipulation instruction.

Reset signal generation clears this register to 00H.

Figure 17-5. Format of DMA Operation Control Register n (DRCn)

Address: FFFBCH (DRC0), FFFBDH (DRC1), F020CH (DRC2), F020DH (DRC3) After reset: 00H R/W

Symbol	<7>	6	5	4	3	2	1	<0>
DRCn	DENn	0	0	0	0	0	0	DSTn

DENn	DMA operation enable flag
0	Disables operation of DMA channel n (stops operating cock of DMA).
1	Enables operation of DMA channel n.
DMAC waits for a DMA trigger when DSTn = 1 after DMA operation is enabled (DENn = 1).	

DSTn	DMA transfer mode flag
0	DMA transfer of DMA channel n is completed.
1	DMA transfer of DMA channel n is not completed (still under execution).
DMAC waits for a DMA trigger when DSTn = 1 after DMA operation is enabled (DENn = 1). When a software trigger (STGn) or the start source trigger set by the IFCn3 to IFCn0 bits is input, DMA transfer is started. When DMA transfer is completed after that, this bit is automatically cleared to 0. Write 0 to this bit to forcibly terminate DMA transfer under execution.	

Caution The DSTn flag is automatically cleared to 0 when a DMA transfer is completed.
Writing the DENn flag is enabled only when DSTn = 0. When a DMA transfer is terminated without waiting for generation of the interrupt (INTDMAn) of DMAn, therefore, set the DSTn bit to 0 and then the DENn bit to 0 (for details, refer to 17.5.5 Forced termination by software).

Remark n: DMA channel number (n = 0 to 3)

17.4 Operation of DMA Controller

17.4.1 Operation procedure

<1> The DMA controller is enabled to operate when DENn = 1. Before writing the other registers, be sure to set the DENn bit to 1. Use 80H to write with an 8-bit manipulation instruction.

<2> Set an SFR address, a RAM address, the number of times of transfer, and a transfer mode of DMA transfer to DMA SFR address register n (DSAn), DMA RAM address register n (DRAn), DMA byte count register n (DBCn), and DMA mode control register n (DMCn).

<3> The DMA controller waits for a DMA trigger when DSTn = 1. Use 81H to write with an 8-bit manipulation instruction.

<4> When a software trigger (STGn) or a start source trigger specified by the IFCn3 to IFCn0 bits is input, a DMA transfer is started.

<5> Transfer is completed when the number of times of transfer set by the DBCn register reaches 0, and transfer is automatically terminated by occurrence of an interrupt (INTDMAn).

<6> Stop the operation of the DMA controller by clearing the DENn bit to 0 when the DMA controller is not used.

Figure 17-6. Operation Procedure

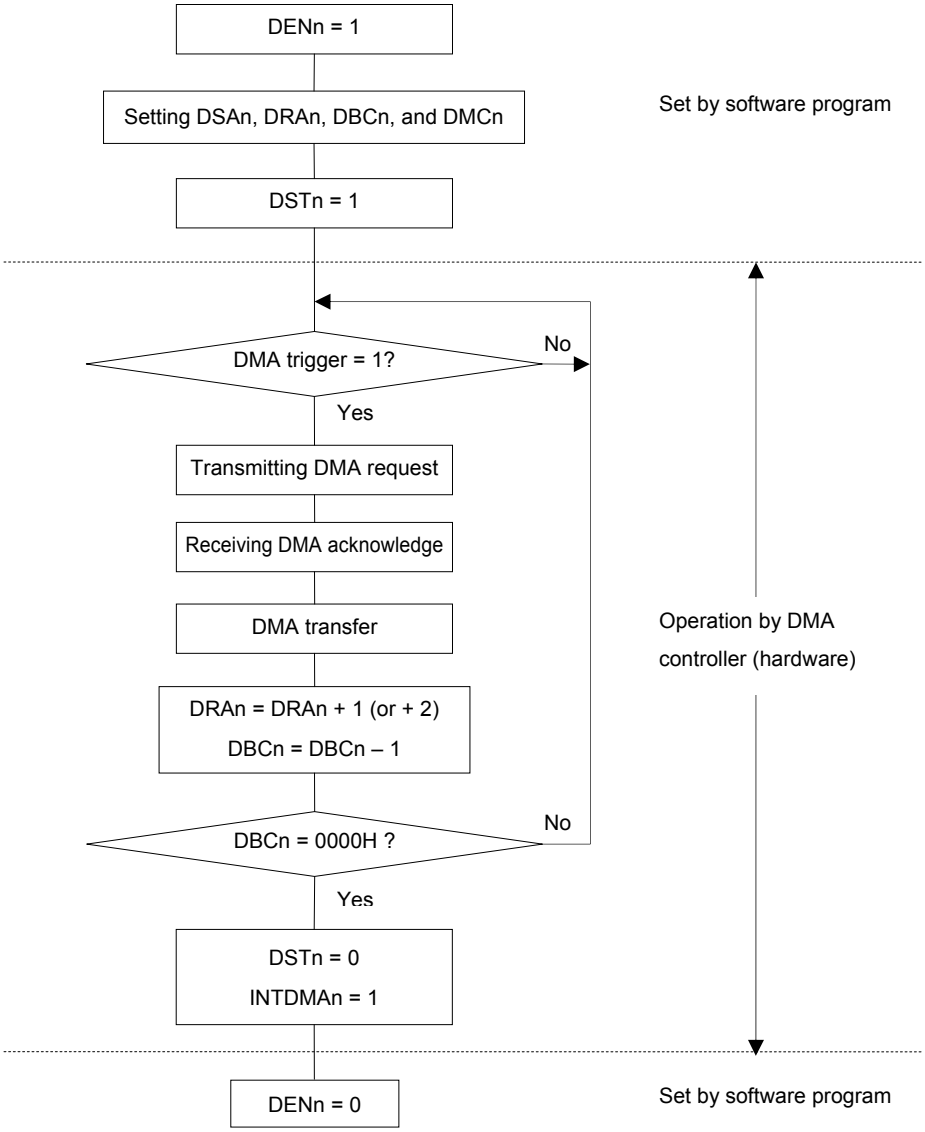

Remark n: DMA channel number (n = 0 to 3)

17.4.2 Transfer mode

The following four modes can be selected for DMA transfer by using bits 6 and 5 (DRSn and DSn) of DMA mode control register n (DMCn).

DRSn	DSn	DMA Transfer Mode
0	0	Transfer from SFR of 1-byte data (fixed address) to RAM (address is incremented by +1)
0	1	Transfer from SFR of 2-byte data (fixed address) to RAM (address is incremented by +2)
1	0	Transfer from RAM of 1-byte data (address is incremented by +1) to SFR (fixed address)
1	1	Transfer from RAM of 2-byte data (address is incremented by +2) to SFR (fixed address)

By using these transfer modes, up to 1024 bytes of data can be consecutively transferred by using the serial interface, data resulting from A/D conversion can be consecutively transferred, and port data can be scanned at fixed time intervals by using a timer.

17.4.3 Termination of DMA transfer

When DBCn = 00H and DMA transfer is completed, the DSTn bit is automatically cleared to 0. An interrupt request (INTDMAn) is generated and transfer is terminated.

When the DSTn bit is cleared to 0 to forcibly terminate DMA transfer, DMA byte count register n (DBCn) and DMA RAM address register n (DRAn) hold the value when transfer is terminated.

The interrupt request (INTDMAn) is not generated if transfer is forcibly terminated.

Remark n: DMA channel number (n = 0 to 3)

17.5 Example of Setting of DMA Controller

17.5.1 CSI consecutive transmission

A flowchart showing an example of setting for CSI consecutive transmission is shown below.

- Consecutive transmission of CSI20 (256 bytes)
- DMA channel 0 is used for DMA transfer.
- DMA start source: INTCSI20 (software trigger (STG0) only for the first start source)
- Interrupt of CSI20 is specified by IFC03 to IFC00 = 1010B.
- Transfers FFB00H to FFBFFH (256 bytes) of RAM to FFF48H of the data register (SIO20) of CSI.

Remark IFC03 to IFC00: Bits 3 to 0 of DMA mode control registers 0 (DMC0)

Figure 17-7. Example of Setting for CSI Consecutive Transmission

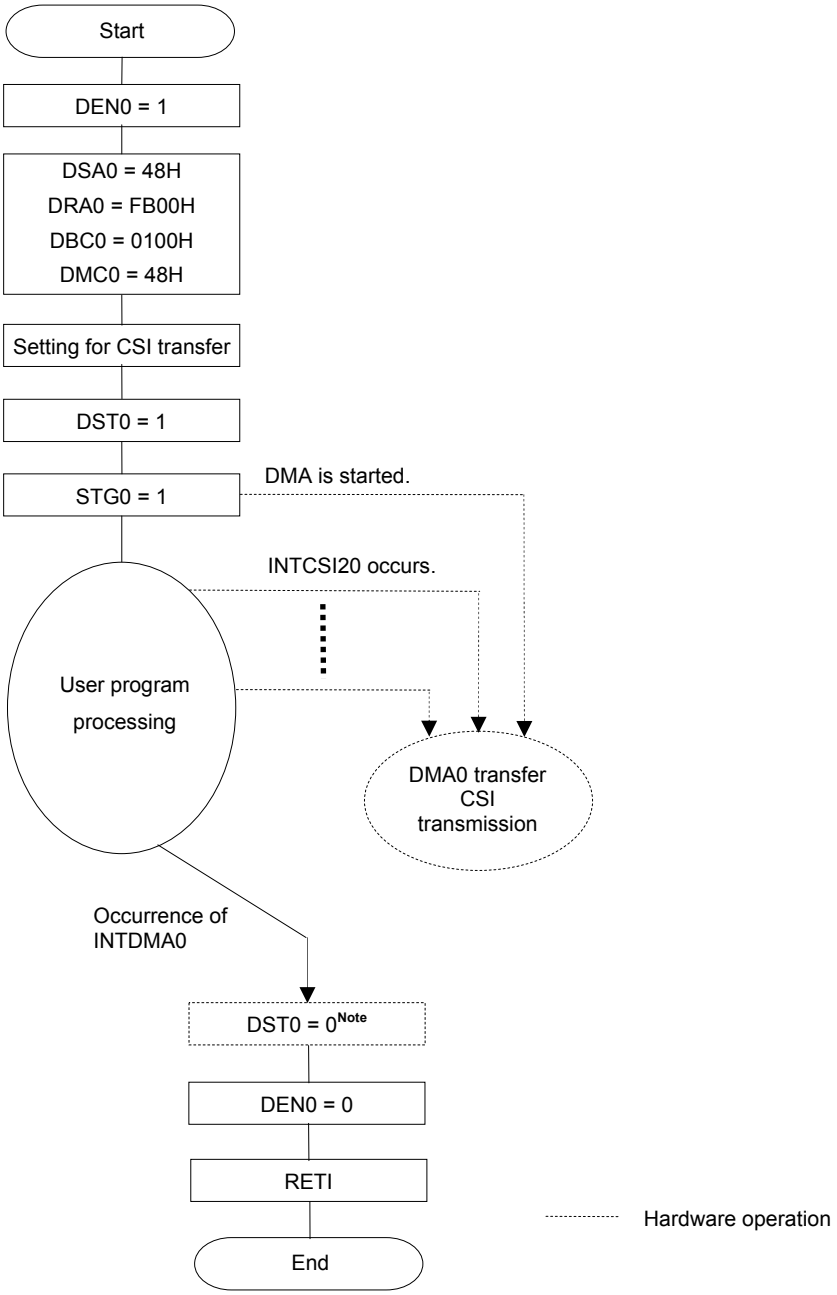

Note The DST0 flag is automatically cleared to 0 when a DMA transfer is completed.
Writing the DEN0 flag is enabled only when DST0 = 0. To terminate a DMA transfer without waiting for occurrence of the interrupt of DMA0 (INTDMA0), set the DST0 bit to 0 and then the DEN0 bit to 0 (for details, refer to **17.5.5 Forced termination by software**).

The fist trigger for consecutive transmission is not started by the interrupt of CSI. In this example, it is started by a software trigger.

CSI transmission of the second time and onward is automatically executed.

A DMA interrupt (INTDMA0) occurs when the last transmit data has been written to the data register.

17.5.2 Consecutive capturing of A/D conversion results

A flowchart of an example of setting for consecutively capturing A/D conversion results is shown below.

- Consecutive capturing of A/D conversion results.
- DMA channel 1 is used for DMA transfer.
- DMA start source: INTAD
- Interrupt of A/D is specified by IFC13 to IFC10 = 0001B.
- Transfers FFF1EH and FFF1FH (2 bytes) of the 10-bit A/D conversion result register (ADCR) to 512 bytes of FFCE0H to FFEDFH of RAM.

Remark IFC13 to IFC10: Bits 3 to 0 of DMA mode control registers 1 (DMC1)

Figure 17-8. Example of Setting of Consecutively Capturing A/D Conversion Results

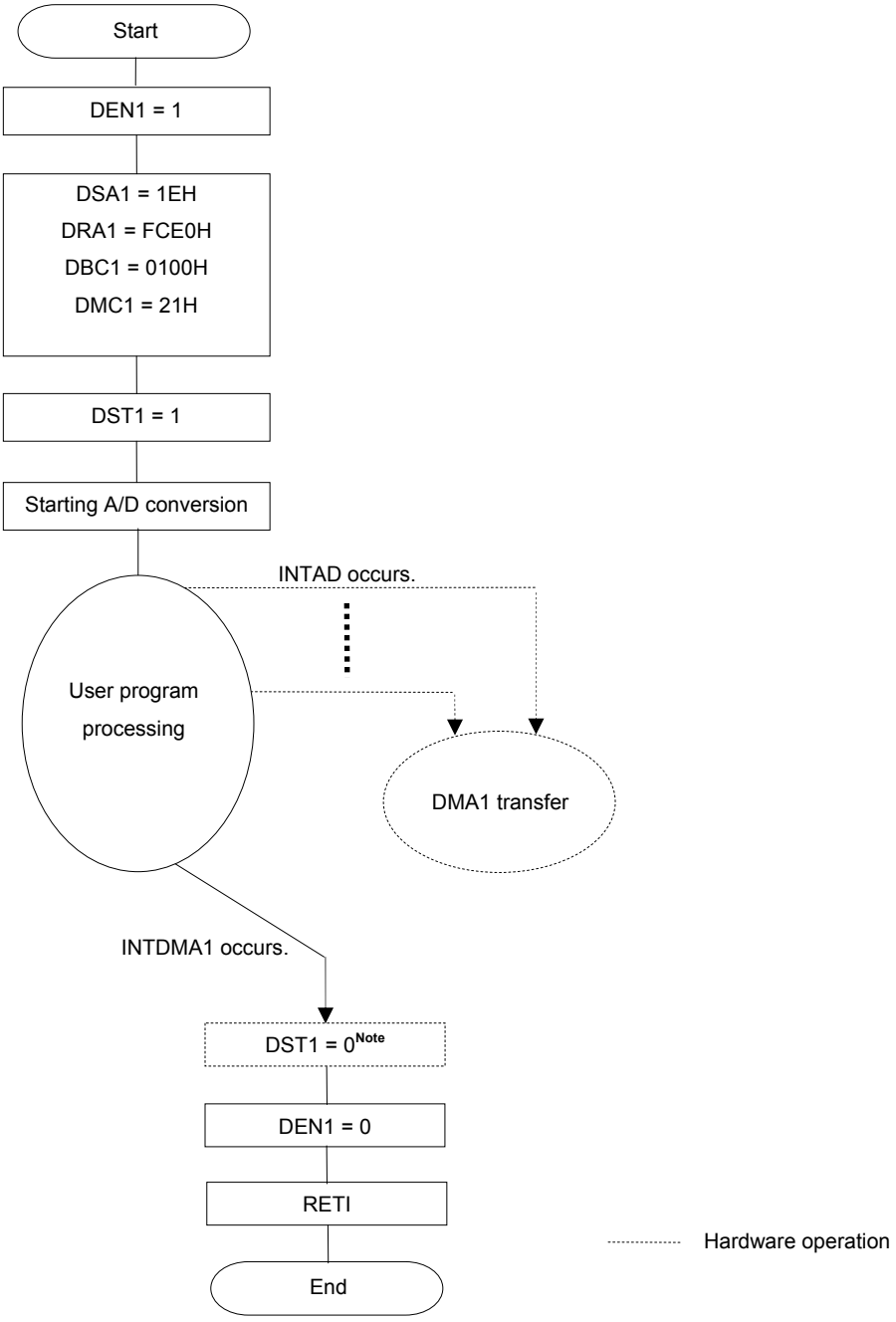

Note The DST1 flag is automatically cleared to 0 when a DMA transfer is completed.
Writing the DEN1 flag is enabled only when DST1 = 0. To terminate a DMA transfer without waiting for occurrence of the interrupt of DMA1 (INTDMA1), set the DST1 bit to 0 and then the DEN1 bit to 0 (for details, refer to **17.5.5 Forced termination by software**).

17.5.3 UART consecutive reception + ACK transmission

A flowchart illustrating an example of setting for UART consecutive reception + ACK transmission is shown below.

- Consecutively receives data from UART0 and outputs ACK to P10 on completion of reception.
- DMA channel 0 is used for DMA transfer.
- DMA start source: Software trigger (DMA transfer on occurrence of an interrupt is disabled.)
- Transfers FFF12H of UART receive data register 0 (RXD0) to 64 bytes of FFE00H to FFE3FH of RAM.

Figure 17-9. Example of Setting UART Consecutive Reception + ACK Transmission

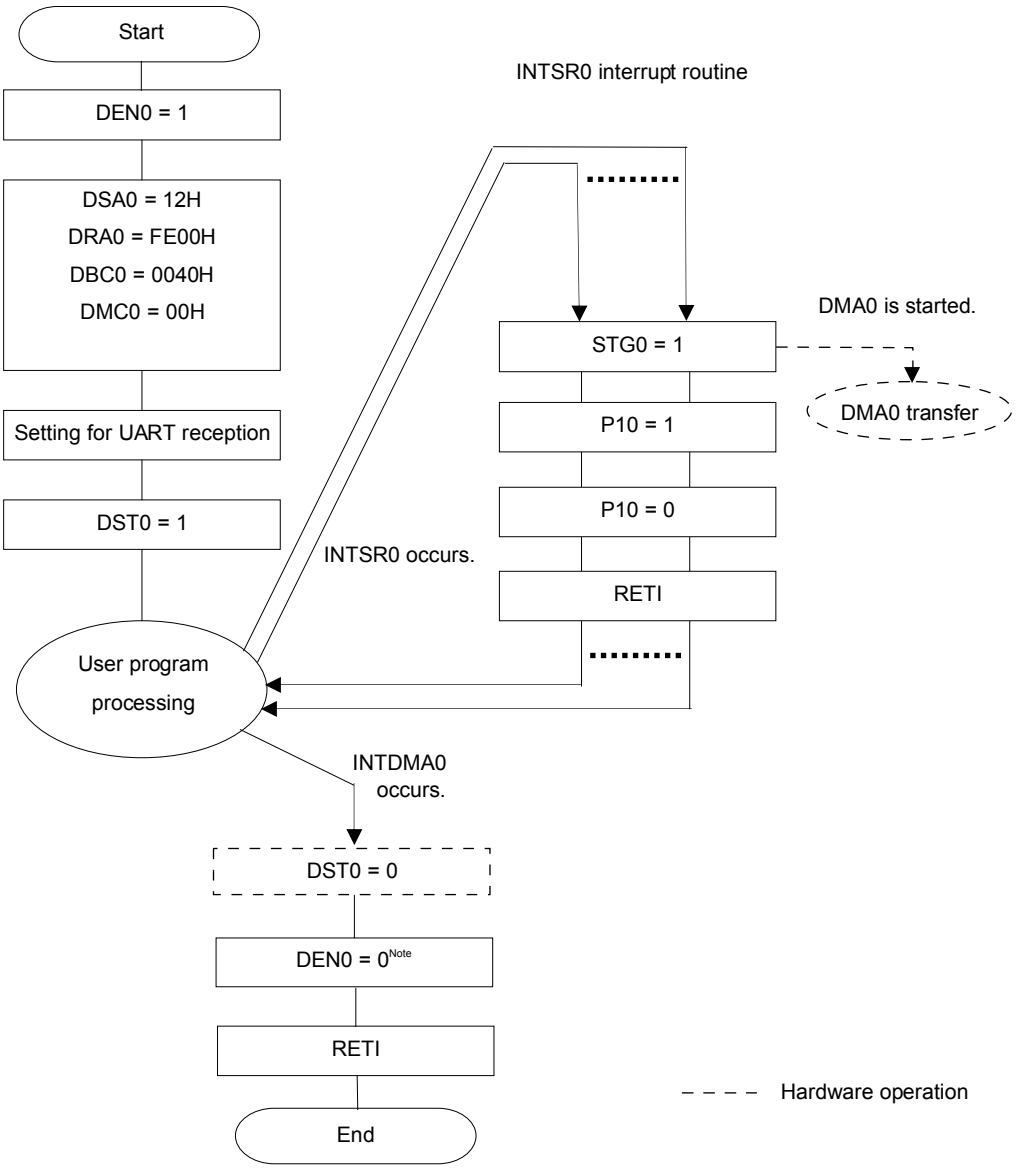

Note The DST0 flag is automatically cleared to 0 when a DMA transfer is completed.
Writing the DEN0 flag is enabled only when DST0 = 0. To terminate a DMA transfer without waiting for occurrence of the interrupt of DMA0 (INTDMA0), set the DST0 bit to 0 and then the DEN0 bit to 0 (for details, refer to **17.5.5 Forced termination by software**).

Remark This is an example where a software trigger is used as a DMA start source.
If ACK is not transmitted and if only data is consecutively received from UART, the UART reception end interrupt (INTSR0) can be used to start DMA for data reception.

17.5.4 Holding DMA transfer pending by DWAITn bit

When DMA transfer is started, transfer is performed while an instruction is executed. At this time, the operation of the CPU is stopped and delayed for the duration of 2 clocks. If this poses a problem to the operation of the set system, a DMA transfer can be held pending by setting the DWAITn bit to 1. The DMA transfer for a transfer trigger that occurred while DMA transfer was held pending is executed after the pending status is canceled. However, because only one transfer trigger can be held pending for each channel, even if multiple transfer triggers occur for one channel during the pending status, only one DMA transfer is executed after the pending status is canceled.

To output a pulse with a width of 10 clocks of the operating frequency from the P10 pin, for example, the clock width increases to 12 if a DMA transfer is started midway. In this case, the DMA transfer can be held pending by setting the DWAITn bit to 1.

After setting the DWAITn bit to 1, it takes two clocks until a DMA transfer is held pending.

Figure 17-10. Example of Setting for Holding DMA Transfer Pending by DWAITn Bit

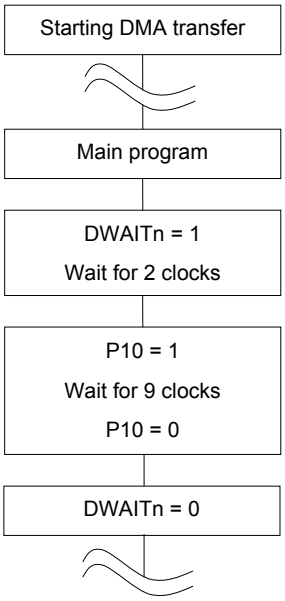

Caution When DMA transfer is held pending while using two or more DMA channels, be sure to hold the DMA transfer pending for all channels (by setting DWAIT0, DWAIT1, DWAIT2, and DWAIT3 to 1). If the DMA transfer of one channel is executed while the DMA transfer of the other channels is held pending, DMA transfer might not be held pending for the other channels.

Remarks 1. n: DMA channel number (n = 0 to 3)

2. 1 clock: $1/f_{CLK}$ (f_{CLK}: CPU clock)

17.5.5 Forced termination by software

After the DSTn bit is set to 0 by software, it takes up to 2 clocks until a DMA transfer is actually stopped and the DSTn bit is set to 0. To forcibly terminate a DMA transfer by software without waiting for occurrence of the interrupt (INTDMAn) of DMAn, therefore, perform either of the following processes.

<When using one DMA channel>

- Set the DSTn bit to 0 (use DRCn = 80H to write with an 8-bit manipulation instruction) by software, confirm by polling that the DSTn bit has actually been cleared to 0, and then set the DENn bit to 0 (use DRCn = 00H to write with an 8-bit manipulation instruction).

- Set the DSTn bit to 0 (use DRCn = 80H to write with an 8-bit manipulation instruction) by software and then set the DENn bit to 0 (use DRCn = 00H to write with an 8-bit manipulation instruction) two or more clocks after.

<When using two or more DMA channels>

- To forcibly terminate DMA transfer by software when using two or more DMA channels (by setting DSTn to 0), clear the DSTn bit to 0 after the DMA transfer is held pending by setting the DWAITn bits of all using channels to 1. Next, clear the DWAITn bits of all using channels to 0 to cancel the pending status, and then clear the DENn bit to 0.

Figure 17-11. Forced Termination of DMA Transfer (1/2)

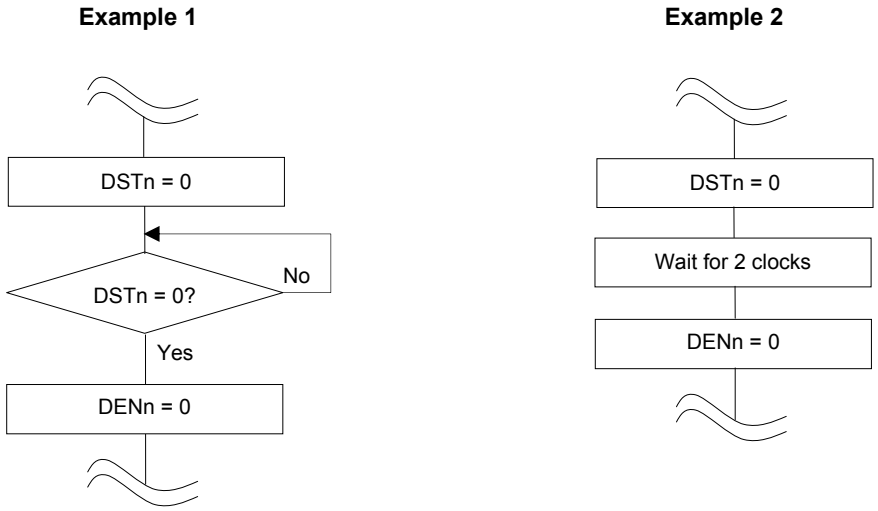

Remarks 1. n: DMA channel number (n = 0 to 3)

2. 1 clock: $1/f_{CLK}$ (f_{CLK}: CPU clock)

Figure 17-11. Forced Termination of DMA Transfer (2/2)

Example 3

- Procedure for forcibly terminating the DMA transfer for one channel if both channels are used

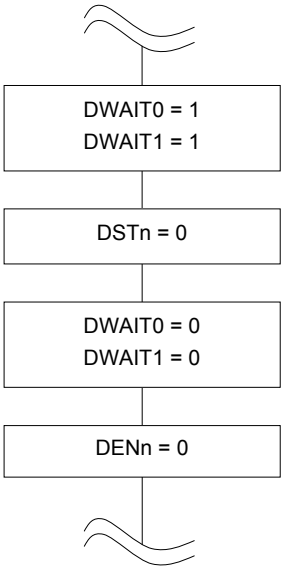

- Procedure for forcibly terminating the DMA transfer for both channels if both channels are used

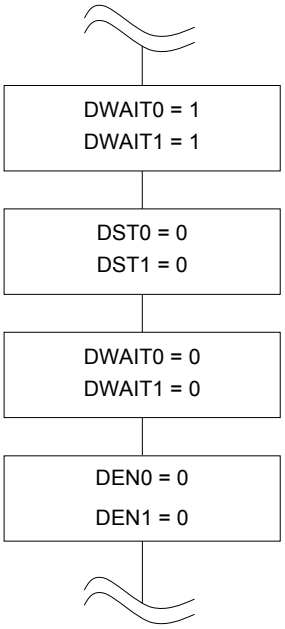

Caution In example 3, the system is not required to wait two clock cycles after the DWAITn bit is set to 1. In addition, the system does not have to wait two clock cycles after clearing the DSTn bit to 0, because more than two clock cycles elapse from when the DSTn bit is cleared to 0 to when the DENn bit is cleared to 0.

Remarks 1. n: DMA channel number (n = 0, 1)

2. 1 clock: $1/f_{CLK}$ (f_{CLK}: CPU clock)

17.6 Cautions on Using DMA Controller

(1) Priority of DMA

During DMA transfer, a request from the other DMA channel is held pending even if generated. The pending DMA transfer is started after the ongoing DMA transfer is completed. If two or more DMA requests are generated at the same time, however, their priority is DMA channel 0 > DMA channel 1 > DMA channel 2 > DMA channel 3.

If a DMA request and an interrupt request are generated at the same time, the DMA transfer takes precedence, and then interrupt servicing is executed.

(2) Contention with interrupt requests

During DMA transfer, interrupt requests are held pending even if they are generated. After the DMA transfer in progress is completed, the pending interrupt request is accepted. At this time, an instruction will not be inserted between DMA transfer processing and reception of the interrupt request.

If a DMA start request is generated at the time an interrupt request is received, priority is given to the DMA transfer.

(3) DMA response time

The response time of DMA transfer is as follows.

Table 17-3. Response Time of DMA Transfer

	Minimum Time	Maximum Time
Response time	3 clocks	10 clocks[Note]

Note The maximum time necessary to execute an instruction from internal RAM is 16 clock cycles.

Cautions 1. The above response time does not include the two clock cycles required for a DMA transfer.

2. When executing a DMA pending instruction (see 17.6 (4)), the maximum response time is extended by the execution time of that instruction to be held pending.

3. Do not specify successive transfer triggers for a channel within a period equal to the maximum response time plus one clock cycle, because they might be ignored.

Remark 1 clock: $1/f_{CLK}$ (f_{CLK}: CPU clock)

(4) Operation in standby mode

The DMA controller operates as follows in the standby mode.

Table 17-4. DMA Operation in Standby Mode

Status	DMA Operation
HALT mode	Normal operation
STOP mode	Stops operation. If DMA transfer conflicts with STOP instruction execution, DMA transfer may be damaged. Therefore, stop DMA before executing the STOP instruction.

(5) DMA pending instruction

Even if a DMA request is generated, DMA transfer is held pending immediately after the instructions given below.

- CALL !addr16
- CALL $!addr20
- CALL !!addr20
- CALL rp
- CALLT [addr5]
- BRK
- MOV PSW, #byte
- MOV PSW, A
- MOV1 PSW. bit, CY
- SET1 PSW. bit
- CLR1 PSW. bit
- POP PSW
- BTCLR PSW. bit, $addr20
- EI
- DI
- Write instructions for registers IF0L, IF0H, IF1L, IF1H, IF2L, IF2H, IF3L, MK0L, MK0H, MK1L, MK1H, MK2L, MK2H, MK3L, PR00L, PR00H, PR01L, PR01H, PR02L, PR02H, PR03L, PR10L, PR10H, PR11L, PR11H, PR12L, PR12H, and PR13L each.
- Instruction for accessing the data flash memory

(6) Operation if address in general-purpose register area or other than those of internal RAM area is specified

The address indicated by DMA RAM address register n (DRAn) is incremented during DMA transfer. If the address is incremented to an address in the general-purpose register area or exceeds the area of the internal RAM, the following operation is performed.

- In mode of transfer from SFR to RAM
  The data of that address is lost.

- In mode of transfer from RAM to SFR
  Undefined data is transferred to SFR.

In either case, malfunctioning may occur or damage may be done to the system. Therefore, make sure that the address is within the internal RAM area other than the general-purpose register area.

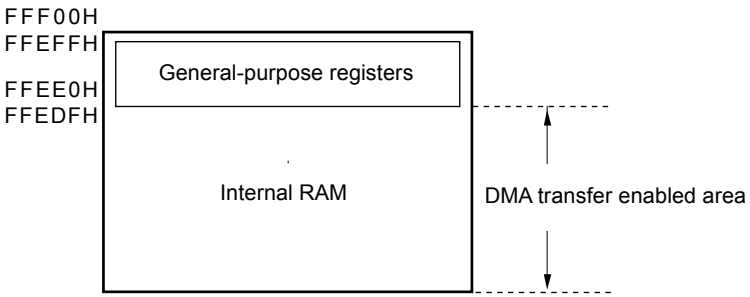

(7) Operation if instructions for accessing the data flash area

If the data flash area is accessed after an next instruction execution from start of DMA transfer, a 3-clock wait will be inserted to the next instruction.

```
Instruction 1
DMA transfer
Instruction 2  ◄- A wait period of three clock cycles occurs.
MOV A,         ! DataFlash area
```

CHAPTER 18 INTERRUPT FUNCTIONS

The interrupt function switches the program execution to other processing. When the branch processing is finished, the program returns to the interrupted processing.

There are four external interrupt sources and 29 internal interrupt sources.

18.1 Interrupt Function Types

The following two types of interrupt functions are used.

(1) Maskable interrupts

These interrupts undergo mask control. Maskable interrupts can be divided into four priority groups by setting the priority specification flag registers (PR00L, PR00H, PR01L, PR01H, PR02L, PR02H, PR03L, PR10L, PR10H, PR11L, PR11H, PR12L, PR12H, PR13L).

Multiple interrupt servicing can be applied to low-priority interrupts when high-priority interrupts are generated. If two or more interrupt requests, each having the same priority, are simultaneously generated, then they are processed according to the default priority of vectored interrupt servicing. Default priority, see **Table 18-1**.

A standby release signal is generated and STOP, HALT, and SNOOZE modes are released.

External interrupt requests and internal interrupt requests are provided as maskable interrupts.

(2) Software interrupt

This is a vectored interrupt generated by executing the BRK instruction. It is acknowledged even when interrupts are disabled. The software interrupt does not undergo interrupt priority control.

18.2 Interrupt Sources and Configuration

Interrupt sources include maskable interrupts and software interrupts. In addition, they also have up to seven reset sources (see **Table 18-1**). The vector codes that store the program start address when branching due to the generation of a reset or various interrupt requests are two bytes each, so interrupts jump to a 64 K address of 00000H to 0FFFFH.

Table 18-1. Interrupt Source List (1/3)

Interrupt Type	Default Priority[Note 1]	Interrupt Source		Internal/ External	Vector Table Address	Basic Configuration Type[Note 2]
		Name	Trigger			
Maskable	0	INTWDTI	Watchdog timer interval[Note 3] (75% of overflow time+1/2f_{IL})	Internal	0004H	(A)
	1	INTLVI	Voltage detection[Note 4]		0006H	
	2	INTP0	Pin input edge detection 0	External	0008H	(B)
	3	INTP3	Pin input edge detection 3		000EH	
	4	INTP5	Pin input edge detection 5		0012H	
	5	INTCSI20/ INTCSI20	CSI20 transfer end or buffer empty interrupt/IIC20 transfer end	Internal	0014H	(A)
	6	INTCSI21	CSI21 transfer end or buffer empty interrupt		0016H	
	7	INTDMA0	End of DMA0 transfer		001AH	
	8	INTDMA1	End of DMA1 transfer		001CH	
	9	INTST0/ INTCSI00/ INTIIC00	UART0 transmission transfer end or buffer empty interrupt/CSI00 transfer end or buffer empty interrupt/IIC00 transfer end		001EH	
	10	INTSR0	UART0 reception transfer end		0020H	
	11	INTSRE0	UART0 reception communication error occurrence		0022H	
		INTTM01H	End of timer channel 01 count or capture (at higher 8-bit timer operation)			
	12	INTST1	UART1 transmission transfer end or buffer empty interrupt		0024H	
	13	INTSR1	UART1 reception transfer end		0026H	

Notes 1. The default priority determines the sequence of interrupts if two or more maskable interrupts occur simultaneously. Zero indicates the highest priority and 32 indicates the lowest priority.

2. Basic configuration types (A) to (D) correspond to (A) to (D) in Figure 18-1.

3. When bit 7 (WDTINT) of the option byte (000C0H) is set to 1.

4. When bit 7 (LVIMD) of the voltage detection level register (LVIS) is cleared to 0.

Table 18-1. Interrupt Source List (2/3)

Interrupt Type	Default Priority[Note 1]	Interrupt Source		Internal/ External	Vector Table Address	Basic Configuration Type[Note 2]
		Name	Trigger			
Maskable	14	INTSRE1	UART1 reception communication error occurrence	Internal	0028H	(A)
		INTTM03H	End of timer channel 03 count or capture (at lower 8-bit timer operation)			
	15	INTIICA0	IICA0 transfer end		002AH	
	16	INTTM00	End of timer channel 00 count or capture		002CH	
	17	INTTM01	End of timer channel 01 count or capture (at 16-bit/lower 8-bit timer operation)		002EH	
	18	INTTM02	End of timer channel 02 count or capture		0030H	
	19	INTTM03	End of timer channel 03 count or capture (at 16-bit/lower 8-bit timer operation)		0032H	
	20	INTAD	End of A/D conversion		0034H	
	21	INTRTC	Fixed-cycle signal of real-time clock/alarm match detection		0036H	
	22	INTIT	Interval signal of 12-bit interval timer detection		0038H	
	23	INTTM04	End of timer channel 04 count or capture		0042H	
	24	INTTM05	End of timer channel 05 count or capture		0044H	
	25	INTTM06	End of timer channel 06 count or capture		0046H	
	26	INTTM07	End of timer channel 07 count or capture		0048H	
	27	INTP6	Pin input edge detection 6	External	004AH	(B)
	28	INTRF	RF interrupt	Internal	0054H	(A)
	29	INTMD	End of division operation/ Overflow occur		005EH	
	30	INTFL	Reserved[Note 3]		0062H	
	31	INTDMA2	End of DMA2 transfer		0064H	
	32	INTDMA3	End of DMA3 transfer		0066H	

Notes 1. The default priority determines the sequence of interrupts if two or more maskable interrupts occur simultaneously. Zero indicates the highest priority and 32 indicates the lowest priority.

2. Basic configuration types (A) to (D) correspond to (A) to (D) in Figure 18-1.

3. Be used at the flash self programming library or the flash data library.

Table 18-1. Interrupt Source List (3/3)

Interrupt Type	Default Priority[Note 1]	Interrupt Source		Internal/ External	Vector Table Address	Basic Configuration Type[Note 2]
		Name	Trigger			
Software	–	BRK	Execution of BRK instruction	–	007EH	(C)
Reset	–	RESET	$\overline{\text{RESET}}$ pin input	–	0000H	–
		POR	Power-on-reset			
		LVD	Voltage detection[Note 3]			
		WDT	Overflow of watchdog timer			
		TRAP	Execution of illegal instruction[Note 4]			
		IAW	Illegal-memory access			
		RPE	RAM parity error			

Notes 1. The default priority determines the sequence of interrupts if two or more maskable interrupts occur simultaneously. Zero indicates the highest priority and 32 indicates the lowest priority.

2. Basic configuration types (A) to (D) correspond to (A) to (D) in Figure 18-1.

3. When bit 7 (LVIMD) of the voltage detection level register (LVIS) is set to 1.

4. When the instruction code in FFH is executed.
Reset by the illegal instruction execution not issued by emulation with the in-circuit emulator or on-chip debug emulator.

Figure 18-1. Basic Configuration of Interrupt Function (1/2)

(A) Internal maskable interrupt

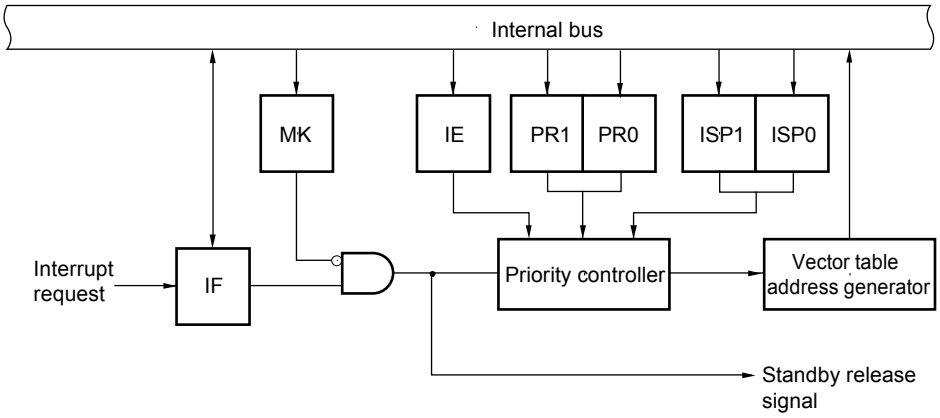

(B) External maskable interrupt (INTPn)

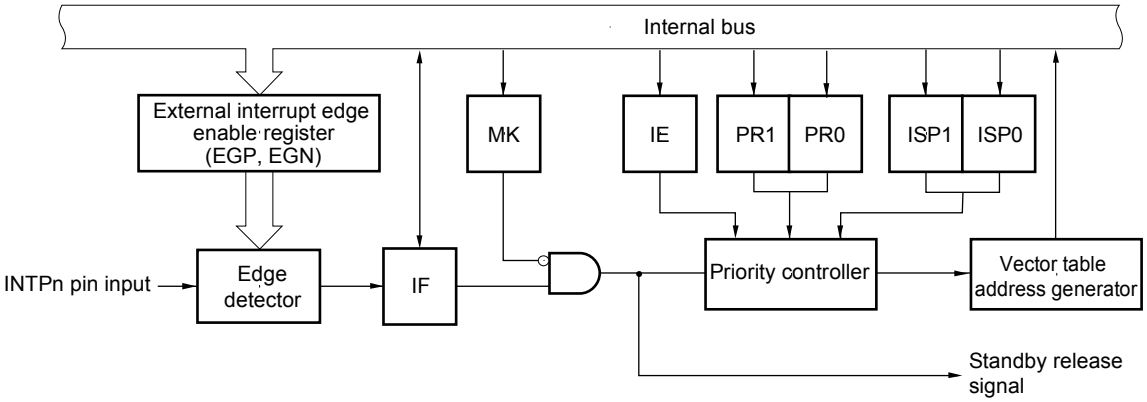

IF: Interrupt request flag
IE: Interrupt enable flag
ISP0: In-service priority flag 0
ISP1: In-service priority flag 1
MK: Interrupt mask flag
PR0: Priority specification flag 0
PR1: Priority specification flag 1

Remark n = 0, 3, 5, 6

Figure 18-1. Basic Configuration of Interrupt Function (2/2)

(C) Software interrupt

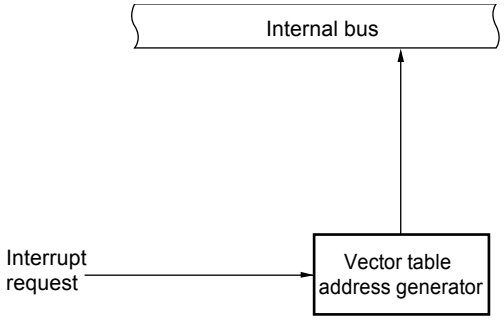

18.3 Registers Controlling Interrupt Functions

The following 6 types of registers are used to control the interrupt functions.

- Interrupt request flag registers (IF0L, IF0H, IF1L, IF1H, IF2L, IF2H, IF3L)
- Interrupt mask flag registers (MK0L, MK0H, MK1L, MK1H, MK2L, MK2H, MK3L)
- Priority specification flag registers (PR00L, PR00H, PR01L, PR01H, PR02L, PR02H, PR03L, PR10L, PR10H, PR11L, PR11H, PR12L, PR12H, PR13L)
- External interrupt rising edge enable registers (EGP0)
- External interrupt falling edge enable registers (EGN0)
- Program status word (PSW)

Table 18-2 shows a list of interrupt request flags, interrupt mask flags, and priority specification flags corresponding to interrupt request sources.

Table 18-2. Flags Corresponding to Interrupt Request Sources (1/2)

Interrupt Source	Interrupt Request Flag		Interrupt Mask Flag		Priority Specification Flag	
		Register		Register		Register
INTWDTI	WDTIIF	IF0L	WDTIMK	MK0L	WDTIPR0, WDTIPR1	PR00L, PR10L
INTLVI	LVIIF		LVIMK		LVIPR0, LVIPR1	
INTP0	PIF0		PMK0		PPR00, PPR10	
INTP3	PIF3		PMK3		PPR03, PPR13	
INTP5	PIF5		PMK5		PPR05, PPR15	
INTCSI20	CSIIF20	IF0H	CSIMK20	MK0H	CSIPR020, CSIPR120	PPR00H, PPR10H
INTIIC20	IICIF20		IICMK20		IICPR020, IICPR120	
INTCSI21	CSIIF21		CSIMK21		CSIPR021, CSIPR121	
INTDMA0	DMAIF0		DMAMK0		DMAPR00, DMAPR10	
INTDMA1	DMAIF1		DMAMK1		DMAPR01, DMAPR11	
INTST0[Note]	STIF0[Note]		STMK0[Note]		STPR00, STPR10[Note]	
INTCSI00[Note]	CSIIF00[Note]		CSIMK00[Note]		CSIPR000, CSIPR100[Note]	
INTIIC00[Note]	IICIF00[Note]		IICMK00[Note]		IICPR000, IICPR100[Note]	
INTSR0	SRIF0		SRMK0		SRPR00, SRPR10	
INTSRE0	SREIF0		SREMK0		SREPR00, SREPR10	
INTTM01H	TMIF01H		TMMK01H		TMPR001H, TMPR101H	

Note If one of the interrupt sources INTST0, INTCSI00, and INTIIC00 is generated, bit 5 of the IF0H register is set to 1. Bit 5 of the MK0H, PR00H, and PR10H registers supports these three interrupt sources.

Table 18-2. Flags Corresponding to Interrupt Request Sources (2/2)

Interrupt Source	Interrupt Request Flag		Interrupt Mask Flag		Priority Specification Flag	
		Register		Register		Register
INTST1	STIF1	IF1L	STMK1	STMK1	STPR01, STPR11	PR01L, PR11L
INTSR1	SRIF1		SRMK1		SRPR01, SRPR11	
INTSRE1[Note]	SREIF1[Note]		SREMK1[Note]		SREPR01, SREPR11[Note]	
INTTM03H[Note]	TMIF03H[Note]		TMMK03H[Note]		TMPR003H, TMPR103H[Note]	
INTIICA0	IICAIF0		IICAMK0		IICAPR00, IICAPR10	
INTTM00	TMIF00		TMMK00		TMPR000, TMPR100	
INTTM01	TMIF01		TMMK01		TMPR001, TMPR101	
INTTM02	TMIF02		TMMK02		TMPR002, TMPR102	
INTTM03	TMIF03		TMMK03		TMPR003, TMPR103	
INTAD	ADIF	IF1H	ADMK	MK1H	ADPR0, ADPR1	PR01H, PR11H
INTRTC	RTCIF		RTCMK		RTCPR0, RTCPR1	
INTIT	ITIF		ITMK		ITPR0, ITPR1	
INTTM04	TMIF04		TMMK04		TMPR004, TMPR104	
INTTM05	TMIF05	IF2L	TMMK05	MK2L	TMPR005, TMPR105	PR02L, PR12L
INTTM06	TMIF06		TMMK06		TMPR006, TMPR106	
INTTM07	TMIF07		TMMK07		TMPR007, TMPR107	
INTP6	PIF6		PMK6		PPR06, PPR16	
INTRF	PIF11	IF2H	PMK11	MK2H	PPR011, PPR111	PR02H, PR12H
INTMD	MDIF		MDMK		MDPR0, MDPR1	
INTFL	FLIF		FLMK		FLPR0, FLPR1	
INTDMA2	DMAIF2	IF3L	DMAMK2	MK3L	DMAPR02, DMAPR12	PR03L, PR13L
INTDMA3	DMAIF3		DMAMK3		DMAPR03, DMAPR13	

Note Do not use a UART1 reception error interrupt and an interrupt of channel 3 of TAU0 (at higher 8-bit timer operation) at the same time because they share flags for the interrupt request sources. If the UART1 reception error interrupt is not used (EOC03 = 0), UART1 and channel 3 of TAU0 (at higher 8-bit timer operation) can be used at the same time. If one of the interrupt sources INTSRE1 and INTTM03H is generated, bit 2 of the IF1L register is set to 1. Bit 2 of the MK1L, PR01L, and PR11L registers supports these two interrupt sources.

18.3.1 Interrupt request flag registers (IF0L, IF0H, IF1L, IF1H, IF2L, IF2H, IF3L)

The interrupt request flags are set to 1 when the corresponding interrupt request is generated or an instruction is executed. They are cleared to 0 when an instruction is executed upon acknowledgment of an interrupt request or upon reset signal generation.

When an interrupt is acknowledged, the interrupt request flag is automatically cleared and then the interrupt routine is entered.

The IF0L, IF0H, IF1L, IF1H, IF2L, IF2H, and IF3L registers can be set by a 1-bit or 8-bit memory manipulation instruction. When the IF0L and IF0H registers, the IF1L and IF1H registers, and the IF2L and IF2H registers are combined to form 16-bit registers IF0, IF1, and IF2, they can be set by a 16-bit memory manipulation instruction.

Reset signal generation clears these registers to 00H.

Remark If an instruction that writes data to this register is executed, the number of instruction execution clocks increases by 2 clocks.

Figure 18-2. Format of Interrupt Request Flag Registers (IF0L, IF0H, IF1L, IF1H, IF2L, IF2H, IF3L) (1/2)

Address: FFFE0H After reset: 00H R/W

Symbol	<7>	6	<5>	4	3	<2>	<1>	<0>
IF0L	PIF5	0	PIF3	0	0	PIF0	LVIIF	WDTIIF

Address: FFFE1H After reset: 00H R/W

Symbol	<7>	<6>	<5>	<4>	<3>	2	<1>	<0>
IF0H	SREIF0 TMIF01H	SRIF0	STIF0 CSIIF00 IICIF00	DMAIF1	DMAIF0	0	CSIIF21	CSIIF20 IICIF20

Address: FFFE2H After reset: 00H R/W

Symbol	<7>	<6>	<5>	<4>	<3>	<2>	<1>	<0>
IF1L	TMIF03	TMIF02	TMIF01	TMIF00	IICAIF0	SREIF1 TMIF03H	SRIF1	STIF1

Address: FFFE3H After reset: 00H R/W

Symbol	<7>	6	5	4	3	<2>	<1>	<0>
IF1H	TMIF04	0	0	0	0	ITIF	RTCIF	ADIF

Address: FFFD0H After reset: 00H R/W

Symbol	7	6	5	4	<3>	<2>	<1>	<0>
IF2L	0	0	0	0	PIF6	TMIF07	TMIF06	TMIF05

Figure 18-2. Format of Interrupt Request Flag Registers (IF0L, IF0H, IF1L, IF1H, IF2L, IF2H, IF3L) (2/2)

Address: FFFD1H After reset: 00H R/W

Symbol	<7>	6	<5>	4	3	2	1	<0>
IF2H	FLIF	0	MDIF	0	0	0	0	PIF11

Address: FFFD2H After reset: 00H R/W

Symbol	7	6	5	4	3	2	<1>	<0>
IF3L	0	0	0	0	0	0	DMAIF3	DMAIF2

XXIFX	Interrupt request flag
0	No interrupt request signal is generated
1	Interrupt request is generated, interrupt request status

Cautions 1. Be sure to set bits that are not available to the initial value.

2. When manipulating a flag of the interrupt request flag register, use a 1-bit memory manipulation instruction (CLR1). When describing in C language, use a bit manipulation instruction such as "IF0L.0 = 0;" or "_asm("clr1 IF0L, 0");" because the compiled assembler must be a 1-bit memory manipulation instruction (CLR1).

If a program is described in C language using an 8-bit memory manipulation instruction such as "IF0L &= 0xfe;" and compiled, it becomes the assembler of three instructions.

```
mov a, IF0L
and a, #0FEH
mov IF0L, a
```

In this case, even if the request flag of the another bit of the same interrupt request flag register (IF0L) is set to 1 at the timing between "mov a, IF0L" and "mov IF0L, a", the flag is cleared to 0 at "mov IF0L, a". Therefore, care must be exercised when using an 8-bit memory manipulation instruction in C language.

18.3.2 Interrupt mask flag registers (MK0L, MK0H, MK1L, MK1H, MK2L, MK2H, MK3L)

The interrupt mask flags are used to enable/disable the corresponding maskable interrupt.

The MK0L, MK0H, MK1L, MK1H, MK2L, MK2H, and MK3L registers can be set by a 1-bit or 8-bit memory manipulation instruction. When the MK0L and MK0H registers, the MK1L and MK1H registers, and the MK2L and MK2H registers are combined to form 16-bit registers MK0, MK1, and MK2, they can be set by a 16-bit memory manipulation instruction.

Reset signal generation sets these registers to FFH.

Remark If an instruction that writes data to this register is executed, the number of instruction execution clocks increases by 2 clocks.

Figure 18-3. Format of Interrupt Mask Flag Registers (MK0L, MK0H, MK1L, MK1H, MK2L, MK2H, MK3L) (1/2)

Address: FFFE4H After reset: FFH R/W

Symbol	<7>	6	<5>	4	3	<2>	<1>	<0>
MK0L	PMK5	1	PMK3	1	1	PMK0	LVIMK	WDTIMK

Address: FFFE5H After reset: FFH R/W

Symbol	<7>	<6>	<5>	<4>	<3>	2	<1>	<0>
MK0H	SREMK0 TMMK01H	SRMK0	STMK0 CSIMK00 IICMK00	DMAMK1	DMAMK0	1	CSIMK21	CSIMK20 IICMK20

Address: FFFE6H After reset: FFH R/W

Symbol	<7>	<6>	<5>	<4>	<3>	<2>	<1>	<0>
MK1L	TMMK03	TMMK02	TMMK01	TMMK00	IICAMK0	SREMK1 TMMK03H	SRMK1	STMK1

Address: FFFE7H After reset: FFH R/W

Symbol	<7>	6	5	4	3	<2>	<1>	<0>
MK1H	TMMK04	1	1	1	1	ITMK	RTCMK	ADMK

Address: FFFD4H After reset: FFH R/W

Symbol	7	6	5	4	<3>	<2>	<1>	<0>
MK2L	1	1	1	1	PMK6	TMMK07	TMMK06	TMMK05

Figure 18-3. Format of Interrupt Mask Flag Registers (MK0L, MK0H, MK1L, MK1H, MK2L, MK2H, MK3L) (2/2)

Address: FFFD5H After reset: FFH R/W

Symbol	<7>	6	<5>	4	3	2	1	<0>
MK2H	FLMK	1	MDMK	1	1	1	1	PMK11

Address: FFFD6H After reset: FFH R/W

Symbol	7	6	5	4	3	2	<1>	<0>
MK3L	1	1	1	1	1	1	DMAMK3	DMAMK2

XXMKX	Interrupt servicing control
0	Interrupt servicing enabled
1	Interrupt servicing disabled

Caution Be sure to set bits that are not available to the initial value.

18.3.3 Priority specification flag registers (PR00L, PR00H, PR01L, PR01H, PR02L, PR02H, PR03L, PR10L, PR10H, PR11L, PR11H, PR12L, PR12H, PR13L)

The priority specification flag registers are used to set the corresponding maskable interrupt priority level.

A priority level is set by using the PR0xy and PR1xy registers in combination (xy = 0L, 0H, 1L, 1H, 2L, or 2H).

The PR00L, PR00H, PR01L, PR01H, PR02L, PR02H, PR03L, PR10L, PR10H, PR11L, PR11H, PR12L, PR12H, and the PR13L registers can be set by a 1-bit or 8-bit memory manipulation instruction. If the PR00L and PR00H registers, the PR01L and PR01H registers, the PR02L and PR02H registers, the PR10L and PR10H registers, the PR11L and PR11H registers, and the PR12L and PR12H registers are combined to form 16-bit registers PR00, PR01, PR02, PR10, PR11, and PR12, they can be set by a 16-bit memory manipulation instruction.

Reset signal generation sets these registers to FFH.

Remark If an instruction that writes data to this register is executed, the number of instruction execution clocks increases by 2 clocks.

Figure 18-4. Format of Priority Specification Flag Registers (PR00L, PR00H, PR01L, PR01H, PR02L, PR02H, PR03L, PR10L, PR10H, PR11L, PR11H, PR12L, PR12H, PR13L) (1/3)

Address: FFFE8H After reset: FFH R/W

Symbol	<7>	6	<5>	4	3	<2>	<1>	<0>
PR00L	PPR05	1	PPR03	1	1	PPR00	LVIPR0	WDTIPR0

Address: FFFECH After reset: FFH R/W

Symbol	<7>	6	<5>	4	3	<2>	<1>	<0>
PR10L	PPR15	1	PPR13	1	1	PPR10	LVIPR1	WDTIPR1

Address: FFFE9H After reset: FFH R/W

Symbol	<7>	<6>	<5>	<4>	<3>	2	<1>	<0>
PR00H	SREPR00 TMPR001H	SRPR00	STPR00 CSIPR000 IICPR000	DMAPR01	DMAPR00	1	CSIPR021	CSIPR020 IICPR020

Address: FFFEDH After reset: FFH R/W

Symbol	<7>	<6>	<5>	<4>	<3>	2	<1>	<0>
PR10H	SREPR10 TMPR101H	SRPR10	STPR10 CSIPR100 IICPR100	DMAPR11	DMAPR10	1	CSIPR121	CSIPR120 IICPR120

Address: FFFEAH After reset: FFH R/W

Symbol	<7>	<6>	<5>	<4>	<3>	<2>	<1>	<0>
PR01L	TMPR003	TMPR002	TMPR001	TMPR000	IICAPR00	SREPR01 TMPR003H	SRPR01	STPR01

Address: FFFEEH After reset: FFH R/W

Symbol	<7>	<6>	<5>	<4>	<3>	<2>	<1>	<0>
PR11L	TMPR103	TMPR102	TMPR101	TMPR100	IICAPR10	SREPR11 TMPR103H	SRPR11	STPR11

Figure 18-4. Format of Priority Specification Flag Registers (PR00L, PR00H, PR01L, PR01H, PR02L, PR02H, PR03L, PR10L, PR10H, PR11L, PR11H, PR12L, PR12H, PR13L) (2/3)

Address: FFFEBH After reset: FFH R/W

Symbol	<7>	6	5	4	3	<2>	<1>	<0>
PR01H	TMPR004	1	1	1	1	ITPR0	RTCPR0	ADPR0

Address: FFFEFH After reset: FFH R/W

Symbol	<7>	6	5	4	3	<2>	<1>	<0>
PR11H	TMPR104	1	1	1	1	ITPR1	RTCPR1	ADPR1

Address: FFFD8H After reset: FFH R/W

Symbol	7	6	5	4	<3>	<2>	<1>	<0>
PR02L	1	1	1	1	PPR06	TMPR007	TMPR006	TMPR005

Address: FFFDCH After reset: FFH R/W

Symbol	7	6	5	4	<3>	<2>	<1>	<0>
PR12L	1	1	1	1	PPR16	TMPR107	TMPR106	TMPR105

Address: FFFD9H After reset: FFH R/W

Symbol	<7>	6	<5>	4	3	2	1	<0>
PR02H	FLPR0	1	MDPR0	1	1	1	1	PPR011

Address: FFFDDH After reset: FFH R/W

Symbol	<7>	6	<5>	4	3	2	1	<0>
PR12H	FLPR1	1	MDPR1	1	1	1	1	PPR111

Figure 18-4. Format of Priority Specification Flag Registers (PR00L, PR00H, PR01L, PR01H, PR02L, PR02H, PR03L, PR10L, PR10H, PR11L, PR11H, PR12L, PR12H, PR13L) (3/3)

Address: FFFDAH After reset: FFH R/W

Symbol	7	6	5	4	3	2	<1>	<0>
PR03L	1	1	1	1	1	1	DMAPR03	DMAPR02

Address: FFFDEH After reset: FFH R/W

Symbol	7	6	5	4	3	2	<1>	<0>
PR13L	1	1	1	1	1	1	DMAPR13	DMAPR12

XXPR1X	XXPR0X	Priority level selection
0	0	Specify level 0 (high priority level)
0	1	Specify level 1
1	0	Specify level 2
1	1	Specify level 3 (low priority level)

Caution Be sure to set bits that are not available to the initial value.

18.3.4 External interrupt rising edge enable registers (EGP0), external interrupt falling edge enable registers (EGN0)

These registers specify the valid edge for INTP0, INTP3, INTP5 and NTP6.

The EGP0 and EGN0 registers can be set by a 1-bit or 8-bit memory manipulation instruction.

Reset signal generation clears these registers to 00H.

Figure 18-5. Format of External Interrupt Rising Edge Enable Register (EGP0) and External Interrupt Falling Edge Enable Register (EGN0)

Address: FFF38H After reset: 00H R/W

Symbol	7	6	5	4	3	2	1	0
EGP0	0	EGP6	EGP5	0	EGP3	0	0	EGP0

Address: FFF39H After reset: 00H R/W

Symbol	7	6	5	4	3	2	1	0
EGN0	0	EGN6	EGN5	0	EGN3	0	0	EGN0

EGP0	EGN0	INTPn pin valid edge selection (n = 0, 3, 5, and 6)
0	0	Edge detection disabled
0	1	Falling edge
1	0	Rising edge
1	1	Both rising and falling edges

Table 18-3 shows the ports corresponding to the EGPn and EGNn bits.

Table 18-3. Interrupt Request Signals Corresponding to EGPn and EGNn bits

Detection Enable Bit		Interrupt Request Signal
EGP0	EGN0	INTP0
EGP3	EGN3	INTP3
EGP5	EGN5	INTP5
EGP6	EGN6	INTP6

Caution When the input port pins used for the external interrupt functions are switched to the output mode, the INTPn interrupt might be generated upon detection of a valid edge. When switching the input port pins to the output mode, set the port mode register (PMxx) to 0 after disabling the edge detection (by setting EGPn and EGNn to 0).

Remarks 1. For edge detection port, see **3.1 Port Function.**

2. n = 0, 3, 5, 6

18.3.5 Program status word (PSW)

The program status word is a register used to hold the instruction execution result and the current status for an interrupt request. The IE flag that sets maskable interrupt enable/disable and the ISP0 and ISP1 flags that controls multiple interrupt servicing are mapped to the PSW.

Besides 8-bit read/write, this register can carry out operations using bit manipulation instructions and dedicated instructions (EI and DI). When a vectored interrupt request is acknowledged, if the BRK instruction is executed, the contents of the PSW are automatically saved into a stack and the IE flag is reset to 0. Upon acknowledgment of a maskable interrupt request, if the value of the priority specification flag register of the acknowledged interrupt is not 00, its value minus 1 is transferred to the ISP0 and ISP1 flags. The PSW contents are also saved into the stack with the PUSH PSW instruction. They are restored from the stack with the RETI, RETB, and POP PSW instructions.

Reset signal generation sets PSW to 06H.

Figure 18-6. Configuration of Program Status Word

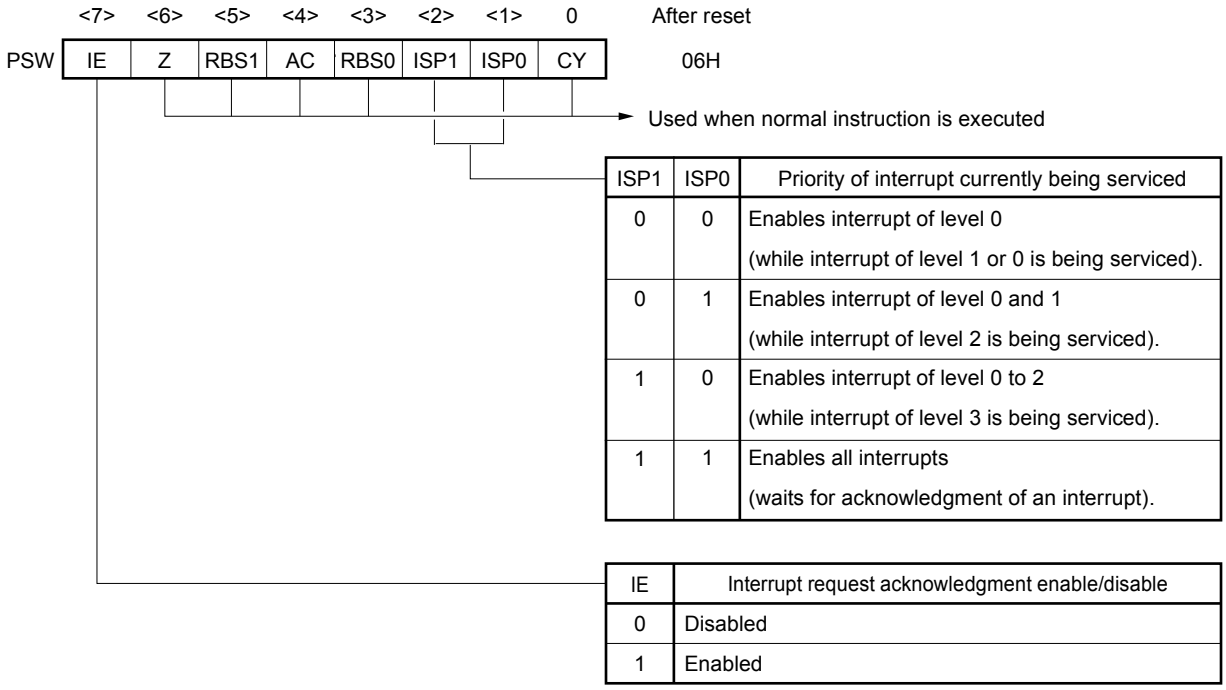

ISP1	ISP0	Priority of interrupt currently being serviced
0	0	Enables interrupt of level 0 (while interrupt of level 1 or 0 is being serviced).
0	1	Enables interrupt of level 0 and 1 (while interrupt of level 2 is being serviced).
1	0	Enables interrupt of level 0 to 2 (while interrupt of level 3 is being serviced).
1	1	Enables all interrupts (waits for acknowledgment of an interrupt).

IE	Interrupt request acknowledgment enable/disable
0	Disabled
1	Enabled

18.4 Interrupt Servicing Operations

18.4.1 Maskable interrupt request acknowledgment

A maskable interrupt request becomes acknowledgeable when the interrupt request flag is set to 1 and the mask (MK) flag corresponding to that interrupt request is cleared to 0. A vectored interrupt request is acknowledged if interrupts are in the interrupt enabled state (when the IE flag is set to 1). However, a low-priority interrupt request is not acknowledged during servicing of a higher priority interrupt request.

The times from generation of a maskable interrupt request until vectored interrupt servicing is performed are listed in Table 18-4 below.

For the interrupt request acknowledgment timing, see **Figures 18-8** and **18-9**.

Table 18-4. Time from Generation of Maskable Interrupt Until Servicing

	Minimum Time	Maximum Time[Note]
Servicing time	9 clocks	16 clocks

Note Maximum time does not apply when an instruction from the internal RAM area is executed.

Remark 1 clock: $1/f_{CLK}$ (f_{CLK}: CPU clock)

If two or more maskable interrupt requests are generated simultaneously, the request with a higher priority level specified in the priority specification flag is acknowledged first. If two or more interrupts requests have the same priority level, the request with the highest default priority is acknowledged first.

An interrupt request that is held pending is acknowledged when it becomes acknowledgeable.

Figure 18-7 shows the interrupt request acknowledgment algorithm.

If a maskable interrupt request is acknowledged, the contents are saved into the stacks in the order of PSW, then PC, the IE flag is reset (0), and the contents of the priority specification flag corresponding to the acknowledged interrupt are transferred to the ISP1 and ISP0 flags. The vector table data determined for each interrupt request is the loaded into the PC and branched.

Restoring from an interrupt is possible by using the RETI instruction.

Figure 18-7. Interrupt Request Acknowledgment Processing Algorithm

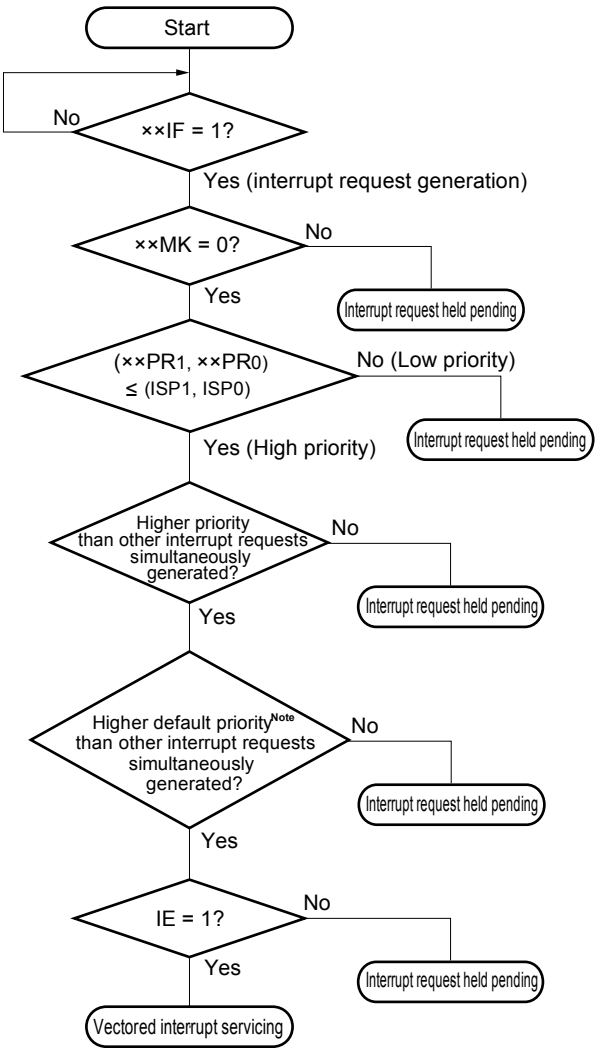

××IF:	Interrupt request flag
××MK:	Interrupt mask flag
××PR0:	Priority specification flag 0
××PR1:	Priority specification flag 1
IE:	Flag that controls acknowledgment of maskable interrupt request (1 = Enable, 0 = Disable)
ISP0, ISP1:	Flag that indicates the priority level of the interrupt currently being serviced (see **Figure 18-6**)

Note For the default priority, refer to **Table 18-1 Interrupt Source List**.

Figure 18-8. Interrupt Request Acknowledgment Timing (Minimum Time)

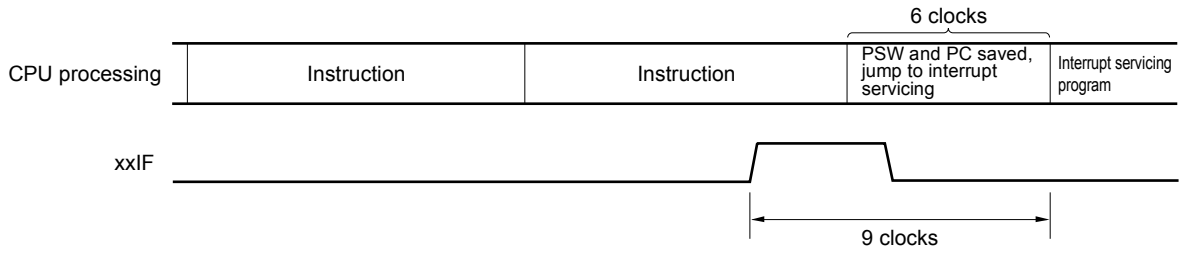

Remark 1 clock: 1/f_{CLK} (f_{CLK}: CPU clock)

Figure 18-9. Interrupt Request Acknowledgment Timing (Maximum Time)

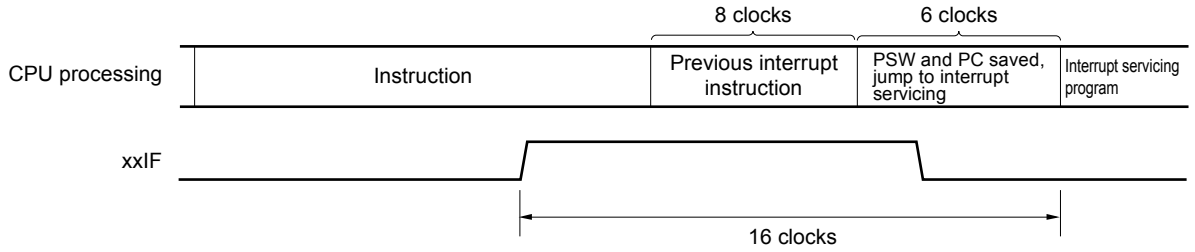

Remark 1 clock: 1/f_{CLK} (f_{CLK}: CPU clock)

18.4.2 Software interrupt request acknowledgment

A software interrupt request is acknowledged by BRK instruction execution. Software interrupts cannot be disabled.

If a software interrupt request is acknowledged, the contents are saved into the stacks in the order of the program status word (PSW), then program counter (PC), the IE flag is reset (0), and the contents of the vector table (0007EH, 0007FH) are loaded into the PC and branched.

Restoring from a software interrupt is possible by using the RETB instruction.

Caution Can not use the RETI instruction for restoring from the software interrupt.

18.4.3 Multiple interrupt servicing

Multiple interrupt servicing occurs when another interrupt request is acknowledged during execution of an interrupt.

Multiple interrupt servicing does not occur unless the interrupt request acknowledgment enabled state is selected (IE = 1). When an interrupt request is acknowledged, interrupt request acknowledgment becomes disabled (IE = 0). Therefore, to enable multiple interrupt servicing, it is necessary to set (1) the IE flag with the EI instruction during interrupt servicing to enable interrupt acknowledgment.

Moreover, even if interrupts are enabled, multiple interrupt servicing may not be enabled, this being subject to interrupt priority control. Two types of priority control are available: default priority control and programmable priority control. Programmable priority control is used for multiple interrupt servicing.

In the interrupt enabled state, if an interrupt request with a priority equal to or higher than that of the interrupt currently being serviced is generated, it is acknowledged for multiple interrupt servicing. If an interrupt with a priority lower than that of the interrupt currently being serviced is generated during interrupt servicing, it is not acknowledged for multiple interrupt servicing. Interrupt requests that are not enabled because interrupts are in the interrupt disabled state or because they have a lower priority are held pending. When servicing of the current interrupt ends, the pending interrupt request is acknowledged following execution of at least one main processing instruction execution.

Table 18-5 shows relationship between interrupt requests enabled for multiple interrupt servicing and Figure 18-10 shows multiple interrupt servicing examples.

Table 18-5. Relationship Between Interrupt Requests Enabled for Multiple Interrupt Servicing During Interrupt Servicing

Multiple Interrupt Request / Interrupt Being Serviced		Maskable Interrupt Request								Software Interrupt Request
		Priority Level 0 (PR = 00)		Priority Level 1 (PR = 01)		Priority Level 2 (PR = 10)		Priority Level 3 (PR = 11)		
		IE = 1	IE = 0	IE = 1	IE = 0	IE = 1	IE = 0	IE = 1	IE = 0	
Maskable interrupt	ISP1 = 0 ISP0 = 0	○	×	×	×	×	×	×	×	○
	ISP1 = 0 ISP0 = 1	○	×	○	×	×	×	×	×	○
	ISP1 = 1 ISP0 = 0	○	×	○	×	○	×	×	×	○
	ISP1 = 1 ISP0 = 1	○	×	○	×	○	×	○	×	○
Software interrupt		○	×	○	×	○	×	○	×	○

Remarks 1. ○: Multiple interrupt servicing enabled

2. ×: Multiple interrupt servicing disabled

3. ISP0, ISP1, and IE are flags contained in the PSW.

ISP1 = 0, ISP0 = 0: An interrupt of level 1 or level 0 is being serviced.

ISP1 = 0, ISP0 = 1: An interrupt of level 2 is being serviced.

ISP1 = 1, ISP0 = 0: An interrupt of level 3 is being serviced.

ISP1 = 1, ISP0 = 1: Wait for an interrupt acknowledgment (all interrupts are enabled).

IE = 0: Interrupt request acknowledgment is disabled.

IE = 1: Interrupt request acknowledgment is enabled.

4. PR is a flag contained in the PR00L, PR00H, PR01L, PR01H, PR02L, PR02H, PR10L, PR10H, PR11L, PR11H, PR12L, and PR12H registers.

PR = 00: Specify level 0 with ××PR1× = 0, ××PR0× = 0 (higher priority level)

PR = 01: Specify level 1 with ××PR1× = 0, ××PR0× = 1

PR = 10: Specify level 2 with ××PR1× = 1, ××PR0× = 0

PR = 11: Specify level 3 with ××PR1× = 1, ××PR0× = 1 (lower priority level)

Figure 18-10. Examples of Multiple Interrupt Servicing (1/2)

Example 1. Multiple interrupt servicing occurs twice

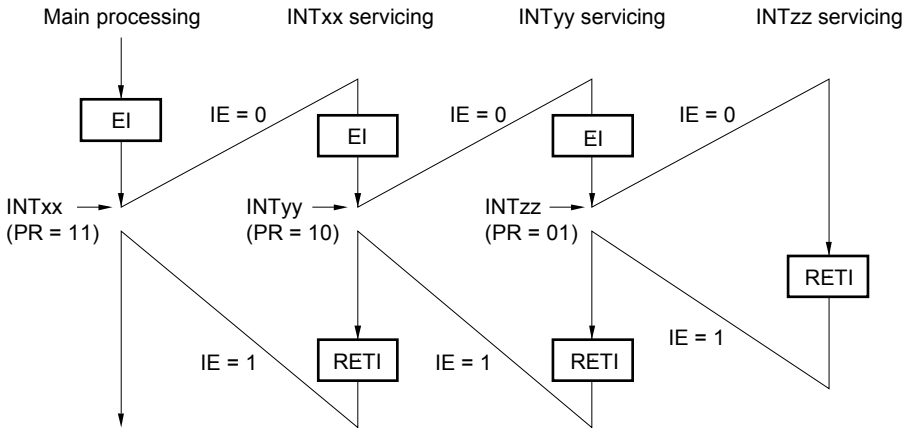

During servicing of interrupt INTxx, two interrupt requests, INTyy and INTzz, are acknowledged, and multiple interrupt servicing takes place. Before each interrupt request is acknowledged, the EI instruction must always be issued to enable interrupt request acknowledgment.

Example 2. Multiple interrupt servicing does not occur due to priority control

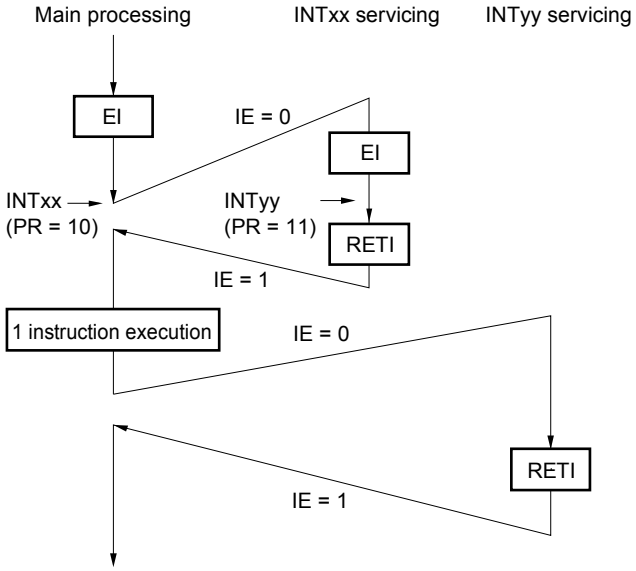

Interrupt request INTyy issued during servicing of interrupt INTxx is not acknowledged because its priority is lower than that of INTxx, and multiple interrupt servicing does not take place. The INTyy interrupt request is held pending, and is acknowledged following execution of one main processing instruction.

PR = 00: Specify level 0 with ××PR1× = 0, ××PR0× = 0 (higher priority level)
PR = 01: Specify level 1 with ××PR1× = 0, ××PR0× = 1
PR = 10: Specify level 2 with ××PR1× = 1, ××PR0× = 0
PR = 11: Specify level 3 with ××PR1× = 1, ××PR0× = 1 (lower priority level)
IE = 0: Interrupt request acknowledgment is disabled
IE = 1: Interrupt request acknowledgment is enabled.

Figure 18-10. Examples of Multiple Interrupt Servicing (2/2)

Example 3. Multiple interrupt servicing does not occur because interrupts are not enabled

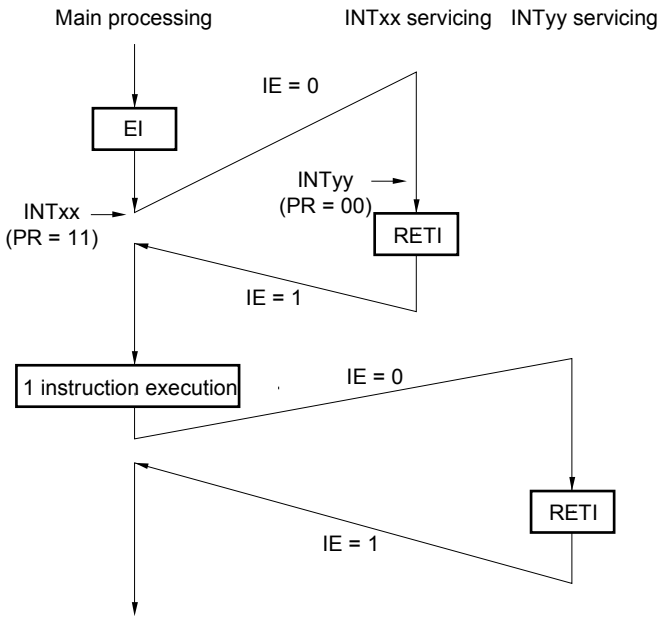

Interrupts are not enabled during servicing of interrupt INTxx (EI instruction is not issued), therefore, interrupt request INTyy is not acknowledged and multiple interrupt servicing does not take place. The INTyy interrupt request is held pending, and is acknowledged following execution of one main processing instruction.

PR = 00: Specify level 0 with ××PR1× = 0, ××PR0× = 0 (higher priority level)
PR = 01: Specify level 1 with ××PR1× = 0, ××PR0× = 1
PR = 10: Specify level 2 with ××PR1× = 1, ××PR0× = 0
PR = 11: Specify level 3 with ××PR1× = 1, ××PR0× = 1 (lower priority level)
IE = 0: Interrupt request acknowledgment is disabled
IE = 1: Interrupt request acknowledgment is enabled.

18.4.4 Interrupt request hold

There are instructions where, even if an interrupt request is issued while the instructions are being executed, interrupt request acknowledgment is held pending until the end of execution of the next instruction. These instructions (interrupt request hold instructions) are listed below.

- MOV PSW, #byte
- MOV PSW, A
- MOV1 PSW. bit, CY
- SET1 PSW. bit
- CLR1 PSW. bit
- RETB
- RETI
- POP PSW
- BTCLR PSW. bit, $addr20
- EI
- DI
- SKC
- SKNC
- SKZ
- SKNZ
- SKH
- SKNH
- Write instructions for the IF0L, IF0H, IF1L, IF1H, IF2L, IF2H, IF3L, MK0L, MK0H, MK1L, MK1H, MK2L, MK2H, MK3L, PR00L, PR00H, PR01L, PR01H, PR02L, PR02H, PR03L, PR10L, PR10H, PR11L, PR11H, PR12L, PR12H, and PR13L registers

Figure 18-11 shows the timing at which interrupt requests are held pending.

Figure 18-11. Interrupt Request Hold

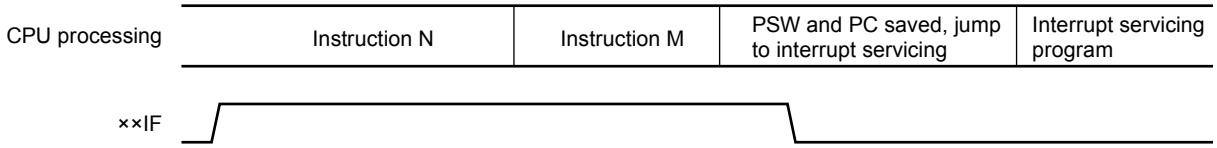

Remarks 1. Instruction N: Interrupt request hold instruction

2. Instruction M: Instruction other than interrupt request hold instruction

CHAPTER 19 STANDBY FUNCTION

19.1 Standby Function

The standby function of the MCU unit reduces the operating current of the system, and the following three modes are available.

(1) HALT mode

HALT instruction execution sets the HALT mode. In the HALT mode, the CPU operation clock is stopped. If the high-speed system clock oscillator, high-speed on-chip oscillator, or subsystem clock oscillator is operating before the HALT mode is set, oscillation of each clock continues. In this mode, the operating current is not decreased as much as in the STOP mode, but the HALT mode is effective for restarting operation immediately upon interrupt request generation and carrying out intermittent operations frequently.

(2) STOP mode

STOP instruction execution sets the STOP mode. In the STOP mode, the high-speed system clock oscillator and high-speed on-chip oscillator stop, stopping the whole system, thereby considerably reducing the CPU operating current.

Because this mode can be cleared by an interrupt request, it enables intermittent operations to be carried out. However, because a wait time is required to secure the oscillation stabilization time after the STOP mode is released when the X1 clock is selected, select the HALT mode if it is necessary to start processing immediately upon interrupt request generation.

(3) SNOOZE mode

In the case of CSI00 or UART0 data reception and an A/D conversion request by the timer trigger signal (the interrupt request signal (INTRTC/INTIT)), the STOP mode is exited, the CSI00 or UART0 data is received without operating the CPU, and A/D conversion is performed. This can only be specified when the high-speed on-chip oscillator is selected for the CPU/peripheral hardware clock (f_{CLK}).

In either of these two modes, all the contents of registers, flags and data memory just before the standby mode is set are held. The I/O port output latches and output buffer statuses are also held.

Cautions 1. The STOP mode can be used only when the CPU is operating on the main system clock. Do not set to the STOP mode while the CPU operates with the subsystem clock. The HALT mode can be used when the CPU is operating on either the main system clock or the subsystem clock.

2. When shifting to the STOP mode, be sure to stop the peripheral hardware operation operating with main system clock before executing STOP instruction (except SNOOZE mode setting unit).

3. When using CSI00, UART0, or the A/D converter in the SNOOZE mode, set up serial standby control register 0 (SSC0) and A/D converter mode register 2 (ADM2) before switching to the STOP mode. For details, see 13.3 Registers Controlling Serial Array Unit and 12.3 Registers Controlling A/D Converter.

4. The following sequence is recommended for power consumption reduction of the A/D converter when the standby function is used: First clear bit 7 (ADCS) and bit 0 (ADCE) of A/D converter mode register 0 (ADM0) to 0 to stop the A/D conversion operation, and then execute the STOP instruction.

5. It can be selected by the option byte whether the low-speed on-chip oscillator continues oscillating or stops in the HALT or STOP mode. For details, see CHAPTER 25 OPTION BYTE.

19.2 Registers Controlling Standby Function

The registers which control the standby function are described below.

- Subsystem clock supply mode control register (OSMC)
- Oscillation stabilization time counter status register (OSTC)
- Oscillation stabilization time select register (OSTS)

Remark For details of registers described above, see **CHAPTER 6 CLOCK GENERATOR**. For registers which control the SNOOZE mode, **CHAPTER 12 A/D CONVERTER** and **CHAPTER 13 SERIAL ARRAY UNIT**.

19.3 Standby Function Operation

19.3.1 HALT mode

(1) HALT mode

The HALT mode is set by executing the HALT instruction. HALT mode can be set regardless of whether the CPU clock before the setting was the high-speed system clock, high-speed on-chip oscillator clock, or subsystem clock.
The operating statuses in the HALT mode are shown below.

Caution Because the interrupt request signal is used to clear the HALT mode, if the interrupt mask flag is 0 (the interrupt processing is enabled) and the interrupt request flag is 1 (the interrupt request signal is generated), the HALT mode is not entered even if the HALT instruction is executed in such a situation.

Table 19-1. Operating Statuses in HALT Mode (1/2)

Item \ HALT Mode Setting			When HALT Instruction Is Executed While CPU Is Operating on Main System Clock		
			When CPU Is Operating on High-speed On-chip Oscillator Clock (f_{IH})	When CPU Is Operating on X1 Clock (f_X)	When CPU Is Operating on External Main System Clock (f_{EX})
System clock			Clock supply to the CPU is stopped		
	Main system clock	f_{IH}	Operation continues (cannot be stopped)	Operation disabled	
		f_X	Operation disabled	Operation continues (cannot be stopped)	Cannot operate
		f_{EX}		Cannot operate	Operation continues (cannot be stopped)
	Subsystem clock	f_{XT}	Status before HALT mode was set is retained		
		f_{EXS}			
	f_{IL}		Set by bits 0 (WDSTBYON) and 4 (WDTON) of option byte (000C0H), and WUTMMCK0 bit of subsystem clock supply mode control register (OSMC) ● WUTMMCK0 = 1: Oscillates ● WUTMMCK0 = 0 and WDTON = 0: Stops ● WUTMMCK0 = 0, WDTON = 1, and WDSTBYON = 1: Oscillates ● WUTMMCK0 = 0, WDTON = 1, and WDSTBYON = 0: Stops		
CPU			Operation stopped		
Code flash memory			Operation stopped		
Data flash memory					
RAM			Operation stopped (Operable when DMA is executed)		
Port (latch)			Status before HALT mode was set is retained		
Timer array unit			Operable		
Real-time clock (RTC)					
12-bit interval timer					
Watchdog timer			See **CHAPTER 11 WATCHDOG TIMER**		
Clock output/buzzer output			Operable		
A/D converter					
Serial array unit (SAU)					
Serial interface (IICA)					
Multiplier and divider/multiply-accumulator					
DMA controller					
Power-on-reset function					
Voltage detection function					
External interrupt					
CRC operation function	High-speed CRC				
	General-purpose CRC		In the calculation of the RAM area, operable when DMA is executed		
RAM parity error detection function			Operable when DMA is executed only		
RAM guard function					
SFR guard function					
Illegal-memory access detection function					

Remark Operation stopped: Operation is automatically stopped before switching to the HALT mode.
Operation disabled: Operation is stopped before switching to the HALT mode.

f_{IH}: High-speed on-chip oscillator clock
f_{IL}: Low-speed on-chip oscillator clock
f_X: X1 clock
f_{EX}: External main system clock
f_{XT}: XT1 clock
f_{EXS}: External subsystem clock

Table 19-1. Operating Statuses in HALT Mode (2/2)

Item \ HALT Mode Setting	When HALT Instruction Is Executed While CPU Is Operating on Subsystem Clock	
	When CPU Is Operating on XT1 Clock (f_{XT})	When CPU Is Operating on External Subsystem Clock (f_{EXS})
System clock	Clock supply to the CPU is stopped	
Main system clock f_{IH}	Operation disabled	
Main system clock f_X		
Main system clock f_{EX}		
Subsystem clock f_{XT}	Operation continues (cannot be stopped)	Cannot operate
Subsystem clock f_{EXS}	Cannot operate	Operation continues (cannot be stopped)
f_{IL}	Set by bits 0 (WDSTBYON) and 4 (WDTON) of option byte (000C0H), and WUTMMCK0 bit of subsystem clock supply mode control register (OSMC) ● WUTMMCK0 = 1: Oscillates ● WUTMMCK0 = 0 and WDTON = 0: Stops ● WUTMMCK0 = 0, WDTON = 1, and WDSTBYON = 1: Oscillates ● WUTMMCK0 = 0, WDTON = 1, and WDSTBYON = 0: Stops	
CPU	Operation stopped	
Code flash memory		
Data flash memory		
RAM	Operation stopped (Operable when DMA is executed)	
Port (latch)	Status before HALT mode was set is retained	
Timer array unit	Operates when the RTCLPC bit is 0 (operation is disabled when the RTCLPC bit is not 0).	
Real-time clock (RTC)	Operable	
12-bit interval timer		
Watchdog timer	See **CHAPTER 11 WATCHDOG TIMER**	
Clock output/buzzer output	Operates when the RTCLPC bit is 0 (operation is disabled when the RTCLPC bit is not 0).	
A/D converter	Operation disabled	
Serial array unit (SAU)	Operates when the RTCLPC bit is 0 (operation is disabled when the RTCLPC bit is not 0).	
Serial interface (IICA)	Operation disabled	
Multiplier and divider/multiply-accumulator	Operates when the RTCLPC bit is 0 (operation is disabled when the RTCLPC bit is not 0).	
DMA controller		
Power-on-reset function	Operable	
Voltage detection function		
External interrupt		
CRC operation function: High-speed CRC	Operation disabled	
CRC operation function: General-purpose CRC	In the calculation of the RAM area, operable when DMA is executed	
RAM parity error detection function	Operable when DMA is executed only	
RAM guard function		
SFR guard function		
Illegal-memory access detection function		

Remark Operation stopped: Operation is automatically stopped before switching to the HALT mode.
Operation disabled: Operation is stopped before switching to the HALT mode.

f_{IH}: High-speed on-chip oscillator clock
f_{IL}: Low-speed on-chip oscillator clock
f_X: X1 clock
f_{EX}: External main system clock
f_{XT}: XT1 clock
f_{EXS}: External subsystem clock

(2) HALT mode release

The HALT mode can be released by the following two sources.

(a) Release by unmasked interrupt request

When an unmasked interrupt request is generated, the HALT mode is released. If interrupt acknowledgment is enabled, vectored interrupt servicing is carried out. If interrupt acknowledgment is disabled, the next address instruction is executed.

Figure 19-1. HALT Mode Release by Interrupt Request Generation

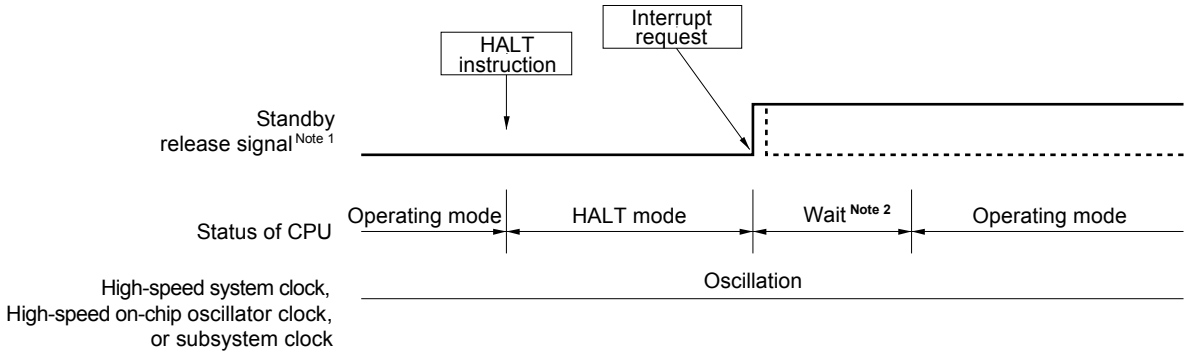

Notes 1. For details of the standby release signal, see **Figure 18-1**.

2. Wait time for HALT mode release

- When vectored interrupt servicing is carried out
  - Main system clock: 15 to 16 clock
  - Subsystem clock (RTCLPC = 0): 10 to 11 clock
  - Subsystem clock (RTCLPC = 1): 11 to 12 clock
- When vectored interrupt servicing is not carried out
  - Main system clock: 9 to 10 clock
  - Subsystem clock (RTCLPC = 0): 4 to 5 clock
  - Subsystem clock (RTCLPC = 1): 5 to 6 clock

Remark The broken lines indicate the case when the interrupt request which has released the standby mode is acknowledged.

(b) Release by reset signal generation

When the reset signal is generated, HALT mode is released, and then, as in the case with a normal reset operation, the program is executed after branching to the reset vector address.

Figure 19-2. HALT Mode Release by Reset (1/2)

(a) When high-speed on-chip oscillator clock is used as CPU clock

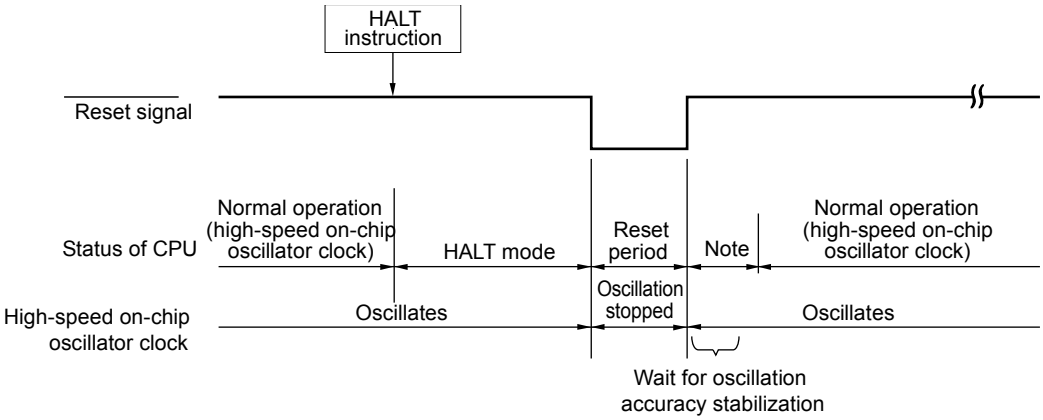

(b) When high-speed system clock is used as CPU clock

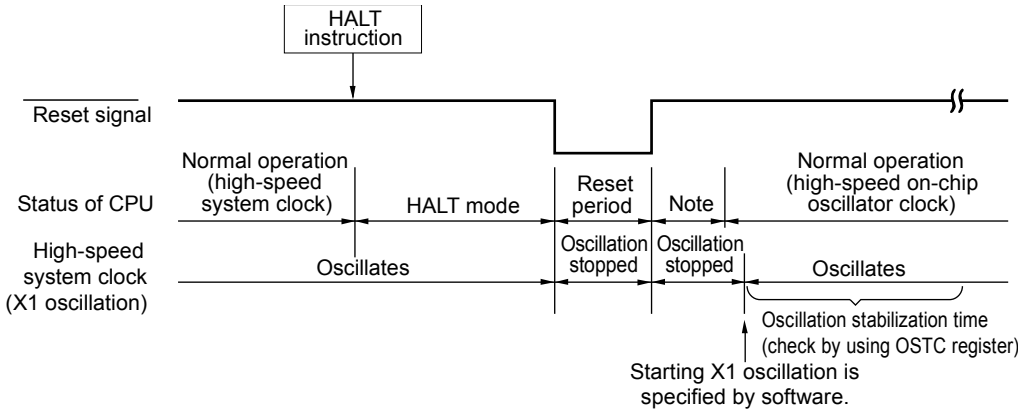

Note For the reset processing time, see **CHAPTER 20 RESET FUNCTION**.
For the reset processing time of the power-on-reset circuit (POR) and voltage detector (LVD), see **CHAPTER 21 POWER-ON-RESET CIRCUIT**.

Figure 19-2. HALT Mode Release by Reset (2/2)

(c) When subsystem clock is used as CPU clock

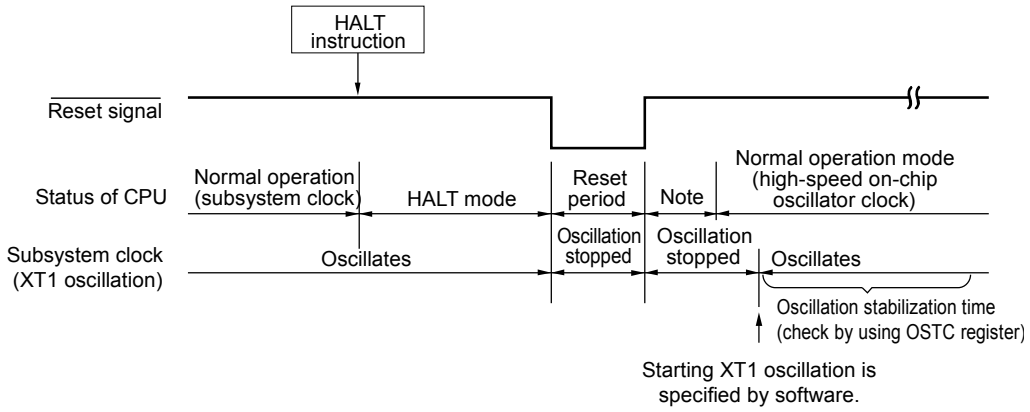

Note For the reset processing time, see **CHAPTER 20 RESET FUNCTION**.
For the reset processing time of the power-on-reset circuit (POR) and voltage detector (LVD), see **CHAPTER 21 POWER-ON-RESET CIRCUIT**.

19.3.2 STOP mode

(1) STOP mode setting and operating statuses

The STOP mode is set by executing the STOP instruction, and it can be set only when the CPU clock before the setting was the high-speed on-chip oscillator clock, X1 clock, or external main system clock.

Caution Because the interrupt request signal is used to clear the STOP mode, if the interrupt mask flag is 0 (the interrupt processing is enabled) and the interrupt request flag is 1 (the interrupt request signal is generated), the STOP mode is immediately cleared if set when the STOP instruction is executed in such a situation. Accordingly, once the STOP instruction is executed, the system returns to its normal operating mode after the elapse of release time from the STOP mode.

The operating statuses in the STOP mode are shown below.

Table 19-2. Operating Statuses in STOP Mode

Item \ STOP Mode Setting	When STOP Instruction Is Executed While CPU Is Operating on Main System Clock		
	When CPU Is Operating on High-speed on-chip oscillator clock (f_{IH})	When CPU Is Operating on X1 Clock (f_X)	When CPU Is Operating on External Main System Clock (f_{EX})
System clock	Clock supply to the CPU is stopped		
Main system clock: f_{IH}, f_X, f_{EX}	Stopped		
Subsystem clock: f_{XT}, f_{EXS}	Status before STOP mode was set is retained		
f_{IL}	Set by bits 0 (WDSTBYON) and 4 (WDTON) of option byte (000C0H), and WUTMMCK0 bit of subsystem clock supply mode control register (OSMC) ● WUTMMCK0 = 1: Oscillates ● WUTMMCK0 = 0 and WDTON = 0: Stops ● WUTMMCK0 = 0, WDTON = 1, and WDSTBYON = 1: Oscillates ● WUTMMCK0 = 0, WDTON = 1, and WDSTBYON = 0: Stops		
CPU	Operation stopped		
Code flash memory			
Data flash memory	Operation stopped		
RAM	Operation stopped		
Port (latch)	Status before STOP mode was set is retained		
Timer array unit	Operation disabled		
Real-time clock (RTC)	Operable		
12-bit interval timer			
Watchdog timer	See **CHAPTER 11 WATCHDOG TIMER**		
Clock output/buzzer output	Operates when the subsystem clock is selected as the clock source for counting and the RTCLPC bit is 0 (operation is disabled when a clock other than the subsystem clock is selected and the RTCLPC bit is not 0).		
A/D converter	Wakeup operation is enabled (switching to the SNOOZE mode)		
Serial array unit (SAU)	Wakeup operation is enabled only for CSI00 and UART0 (switching to the SNOOZE mode) Operation is disabled for anything other than CSI00 and UART0		
Serial interface (IICA)	Wakeup by address match operable		
Multiplier and divider/multiply-accumulator	Operation disabled		
DMA controller			
Power-on-reset function	Operable		
Voltage detection function			
External interrupt			
CRC operation function: High-speed CRC	Operation stopped		
CRC operation function: General-purpose CRC			
RAM parity error detection function			
RAM guard function			
SFR guard function			
Illegal-memory access detection function			

Remark Operation stopped: Operation is automatically stopped before switching to the STOP mode.
Operation disabled: Operation is stopped before switching to the STOP mode.
f_{IH}: High-speed on-chip oscillator clock f_{IL}: Low-speed on-chip oscillator clock
f_X: X1 clock f_{EX}: External main system clock
f_{XT}: XT1 clock f_{EXS}: External subsystem clock

(2) STOP mode release

The STOP mode can be released by the following two sources.

(a) Release by unmasked interrupt request

When an unmasked interrupt request is generated, the STOP mode is released. After the oscillation stabilization time has elapsed, if interrupt acknowledgment is enabled, vectored interrupt servicing is carried out. If interrupt acknowledgment is disabled, the next address instruction is executed.

Figure 19-3. STOP Mode Release by Interrupt Request Generation (1/2)

(a) When high-speed on-chip oscillator clock is used as CPU clock

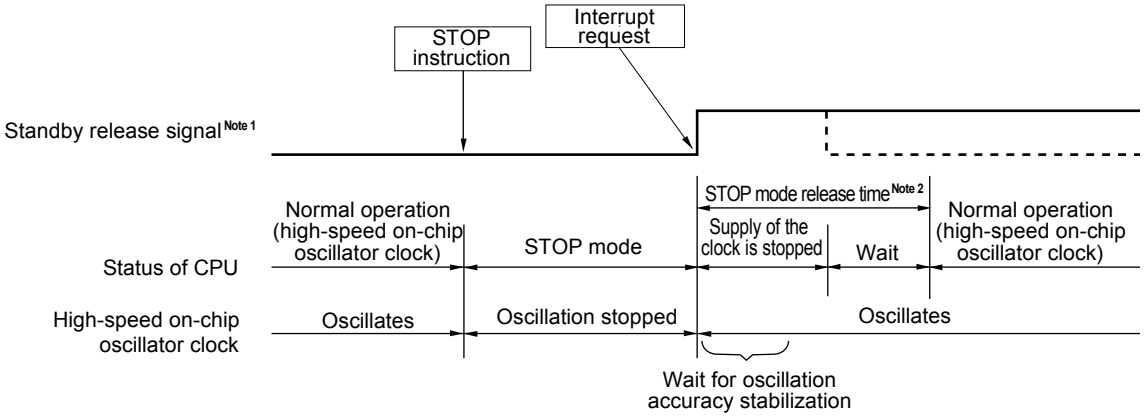

Notes 1. For details of the standby release signal, see **Figure 18-1**.

2. STOP mode release time

Supply of the clock is stopped: 18 μs to 65 μs

Wait

- When vectored interrupt servicing is carried out: 7 clocks
- When vectored interrupt servicing is not carried out: 1 clock

Remarks 1. The clock supply stop time varies depending on the temperature conditions and STOP mode period.

2. The broken lines indicate the case when the interrupt request that has released the standby mode is acknowledged.

Figure 19-3. STOP Mode Release by Interrupt Request Generation (2/2)

(b) When high-speed system clock (X1 oscillation) is used as CPU clock

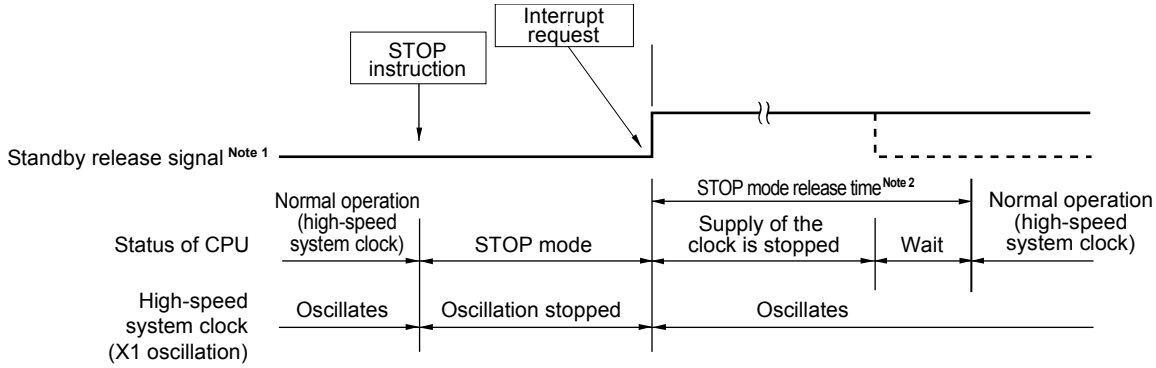

Notes 1. For details of the standby release signal, see **Figure 18-1**.

2. STOP mode release time

Supply of the clock is stopped: 18 μs to "whichever is longer 65 μs and the oscillation stabilization time (set by OSTS)"

Wait

- When vectored interrupt servicing is carried out: 10 to 11 clocks
- When vectored interrupt servicing is not carried out: 4 to 5 clocks

(c) When high-speed system clock (external clock input) is used as CPU clock

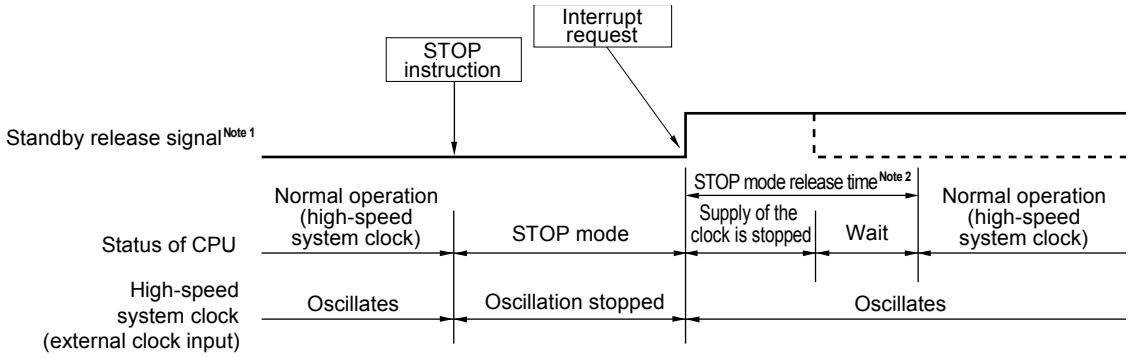

Notes 1. For details of the standby release signal, see **Figure 18-1**.

2. STOP mode release time

Supply of the clock is stopped: 18 μs to 65 μs

Wait

- When vectored interrupt servicing is carried out: 7 clocks
- When vectored interrupt servicing is not carried out: 1 clock

Caution **To reduce the oscillation stabilization time after release from the STOP mode while CPU operates based on the high-speed system clock (X1 oscillation), switch the clock to the high-speed on-chip oscillator clock temporarily before executing the STOP instruction.**

Remarks 1. The clock supply stop time varies depending on the temperature conditions and STOP mode period.

2. The broken lines indicate the case when the interrupt request that has released the standby mode is acknowledged.

(b) Release by reset signal generation

When the reset signal is generated, STOP mode is released, and then, as in the case with a normal reset operation, the program is executed after branching to the reset vector address.

Figure 19-4. STOP Mode Release by Reset

(a) When high-speed on-chip oscillator clock is used as CPU clock

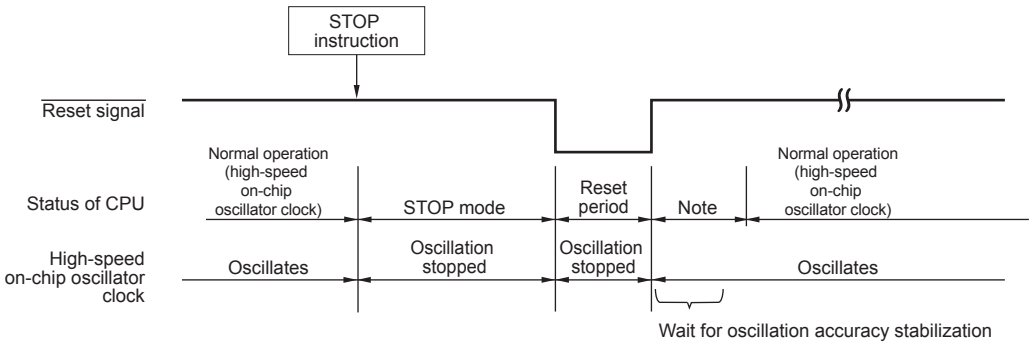

(b) When high-speed system clock is used as CPU clock

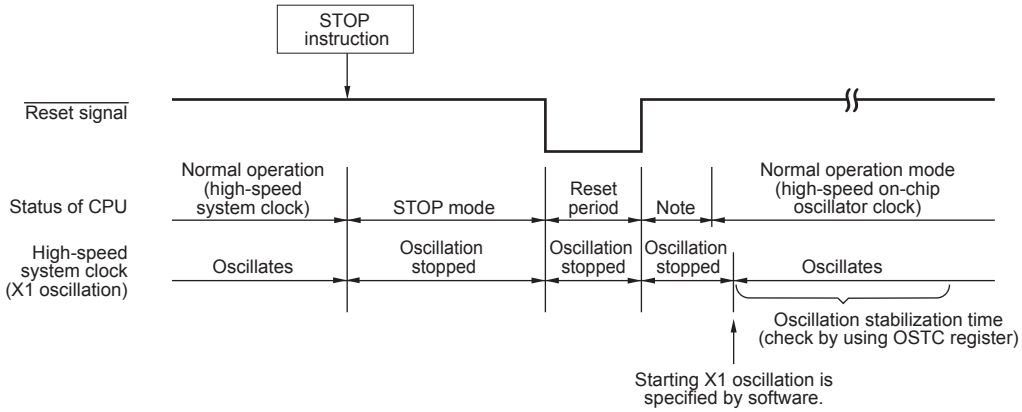

Note For the reset processing time, see **CHAPTER 20 RESET FUNCTION**.
For the reset processing time of the power-on-reset circuit (POR) and voltage detector (LVD), see **CHAPTER 21 POWER-ON-RESET CIRCUIT**.

19.3.3 SNOOZE mode

(1) SNOOZE mode setting and operating statuses

The SNOOZE mode can only be specified for CSI00, UART0, or the A/D converter. Note that this mode can only be specified if the CPU clock is the high-speed on-chip oscillator clock.

When using CSI00 or UART0 in the SNOOZE mode, set the SWCm bit of the serial standby control register m (SSCm) to 1 immediately before switching to the STOP mode. For details, see **13.3 Registers Controlling Serial Array Unit**.

When using the A/D converter in the SNOOZE mode, set the AWC bit of the A/D converter mode register 2 (ADM2) to 1 immediately before switching to the STOP mode. For details, see **12.3 Registers Used in A/D Converter**.

In SNOOZE mode transition, wait status to be only following time.
Transition time from STOP mode to SNOOZE mode: 18 μs to 65 μs

Remark Transition time from STOP mode to SNOOZE mode varies depending on the temperature conditions and the STOP mode period.

Transition time from SNOOZE mode to normal operation:

- When vectored interrupt servicing is carried out:
  HS (High-speed main) mode : "4.99 μs to 9.44 μs" + 7 clocks
  LS (Low-speed main) mode : "1.10 μs to 5.08 μs" + 7 clocks
  LV (Low-voltage main) mode : "16.58 μs to 25.40 μs" + 7 clocks
- When vectored interrupt servicing is not carried out:
  HS (High-speed main) mode : "4.99 μs to 9.44 μs" + 1 clock
  LS (Low-speed main) mode : "1.10 μs to 5.08 μs" + 1 clock
  LV (Low-voltage main) mode : "16.58 μs to 25.40 μs" + 1 clock

The operating statuses in the SNOOZE mode are shown below.

Table 19-3. Operating Statuses in SNOOZE Mode

Item \ STOP Mode Setting			When Inputting CSI00/UART0 Data Reception Signal or A/D Converter Timer Trigger Signal While in STOP Mode
			When CPU Is Operating on High-speed on-chip oscillator clock (f_{IH})
System clock			Clock supply to the CPU is stopped
	Main system clock	f_{IH}	Operation started
		f_X	Stopped
		f_{EX}	
	Subsystem clock	f_{XT}	Use of the status while in the STOP mode continues
		f_{EXS}	
	f_{IL}		Set by bits 0 (WDSTBYON) and 4 (WDTON) of option byte (000C0H), and WUTMMCK0 bit of subsystem clock supply mode control register (OSMC) ● WUTMMCK0 = 1: Oscillates ● WUTMMCK0 = 0 and WDTON = 0: Stops ● WUTMMCK0 = 0, WDTON = 1, and WDSTBYON = 1: Oscillates ● WUTMMCK0 = 0, WDTON = 1, and WDSTBYON = 0: Stops
CPU			Operation stopped
Code flash memory			
Data flash memory			
RAM			Operation stopped (Operable when DMA is executed)
Port (latch)			Use of the status while in the STOP mode continues
Timer array unit			Operation disabled
Real-time clock (RTC)			Operable
12-bit interval timer			
Watchdog timer			See **CHAPTER 10 WATCHDOG TIMER**
Clock output/buzzer output			Operates when the subsystem clock is selected as the clock source for counting and the RTCLPC bit is 0 (operation is disabled when a clock other than the subsystem clock is selected and the RTCLPC bit is not 0).
A/D converter			Operable
Serial array unit (SAU)			Operable only CSI00 and UART0 only. Operation disabled other than CSI00 and UART0.
Serial interface (IICA)			Operation disabled
Multiplier and divider/multiply-accumulator			
DMA controller			
Power-on-reset function			Operable
Voltage detection function			
External interrupt			
CRC operation function	High-speed CRC		Operation disabled
	General-purpose CRC		
RAM parity error detection function			
RAM guard function			
SFR guard function			
Illegal-memory access detection function			

Remark Operation stopped: Operation is automatically stopped before switching to the SNOOZE mode.
Operation disabled: Operation is stopped before switching to the SNOOZE mode.
f_{IH}: High-speed on-chip oscillator clock f_{IL}: Low-speed on-chip oscillator clock
f_X: X1 clock f_{EX}: External main system clock
f_{XT}: XT1 clock f_{EXS}: External subsystem clock

(2) Timing diagram when the interrupt request signal is generated in the SNOOZE mode

Figure 19-5. When the Interrupt Request Signal is Generated in the SNOOZE Mode

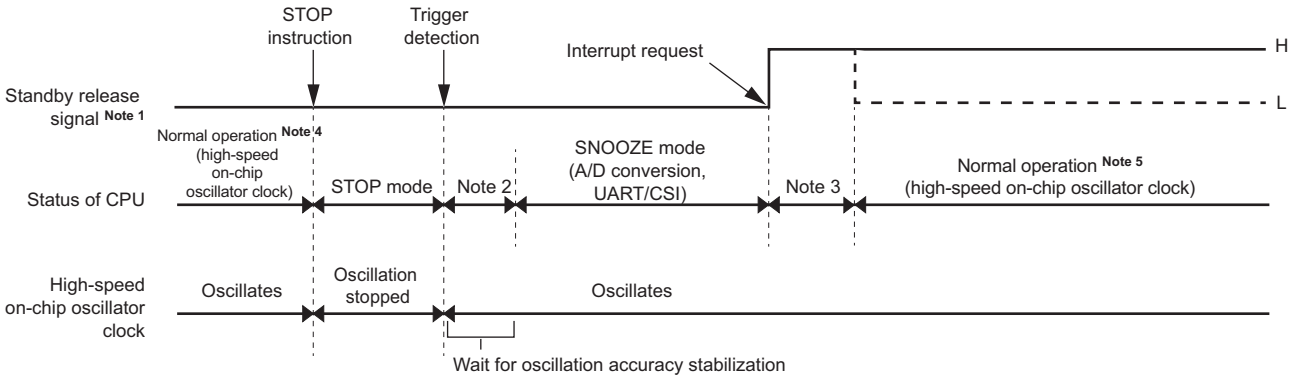

Notes 1. For details of the standby release signal, see **Figure 18-1**.

2. Transition time from STOP mode to SNOOZE mode

3. Transition time from SNOOZE mode to normal operation

4. Enable the SNOOZE mode (AWC = 1 or SWC = 1) immediately before switching to the STOP mode.

5. Be sure to release the SNOOZE mode (AWC = 0 or SWC = 0) immediately after return to the normal operation.

(3) Timing diagram when the interrupt request signal is not generated in the SNOOZE mode

Figure 19-6. When the Interrupt Request Signal is not Generated in the SNOOZE Mode

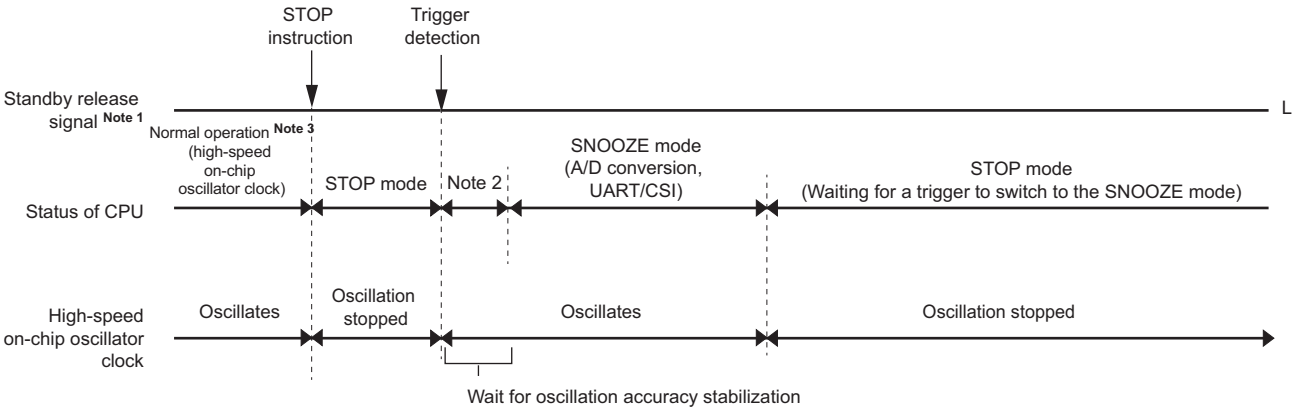

Notes 1. For details of the standby release signal, see **Figure 18-1**.

2. Transition time from STOP mode to SNOOZE mode

3. Enable the SNOOZE mode (AWC = 1 or SWC = 1) immediately before switching to the STOP mode.

Remark For details of the SNOOZE mode function, see **CHAPTER 12 A/D CONVERTER** and **CHAPTER 13 SERIAL ARRAY UNIT**.

CHAPTER 20 RESET FUNCTION

The following seven operations are available to generate a reset signal.

(1) External reset input via $\overline{\text{RESET}}$ pin
(2) Internal reset by watchdog timer program loop detection
(3) Internal reset by comparison of supply voltage and detection voltage of power-on-reset (POR) circuit
(4) Internal reset by comparison of supply voltage of the voltage detector (LVD) and detection voltage
(5) Internal reset by execution of illegal instruction[Note]
(6) Internal reset by RAM parity error
(7) Internal reset by illegal-memory access

External and internal resets start program execution from the address stored at 0000H and 0001H when the reset signal is generated.

A reset is effected when a low level is input to the $\overline{\text{RESET}}$ pin, the watchdog timer overflows, or by POR and LVD circuit voltage detection, execution of illegal instruction[Note], RAM parity error or illegal-memory access, and each item of hardware is set to the status shown in Table 20-1.

Note The illegal instruction is generated when instruction code FFH is executed.
Reset by the illegal instruction execution not issued by emulation with the in-circuit emulator or on-chip debug emulator.

Cautions 1. For an external reset, input a low level for 10 μs or more to the $\overline{\text{RESET}}$ pin.
To perform an external reset upon power application, input a low level to the $\overline{\text{RESET}}$ pin, turn power on, continue to input a low level to the pin for 10 us or more within the operating voltage range shown in 30.6 AC Characteristics, and then input a high level to the pin.

2. During reset input, the X1 clock, XT1 clock, high-speed on-chip oscillator clock, and low-speed on-chip oscillator clock stop oscillating. External main system clock input and external subsystem clock input become invalid.

3. The port pins become the following state because each SFR and 2nd SFR are initialized after reset.
- **P40: High-impedance during the external reset period or reset period by the POR. High level during other types of reset or after receiving a reset signal (connected to the internal pull-up resistor).**
- **P130: Low level during the reset period or after receiving a reset signal.**
- **Ports other than P40 and P130: High-impedance during the reset period or after receiving a reset signal.**

Remark V_{POR}: POR power supply rise detection voltage
V_{LVD}: LVD detection voltage

Figure 20-1. Block Diagram of Reset Function

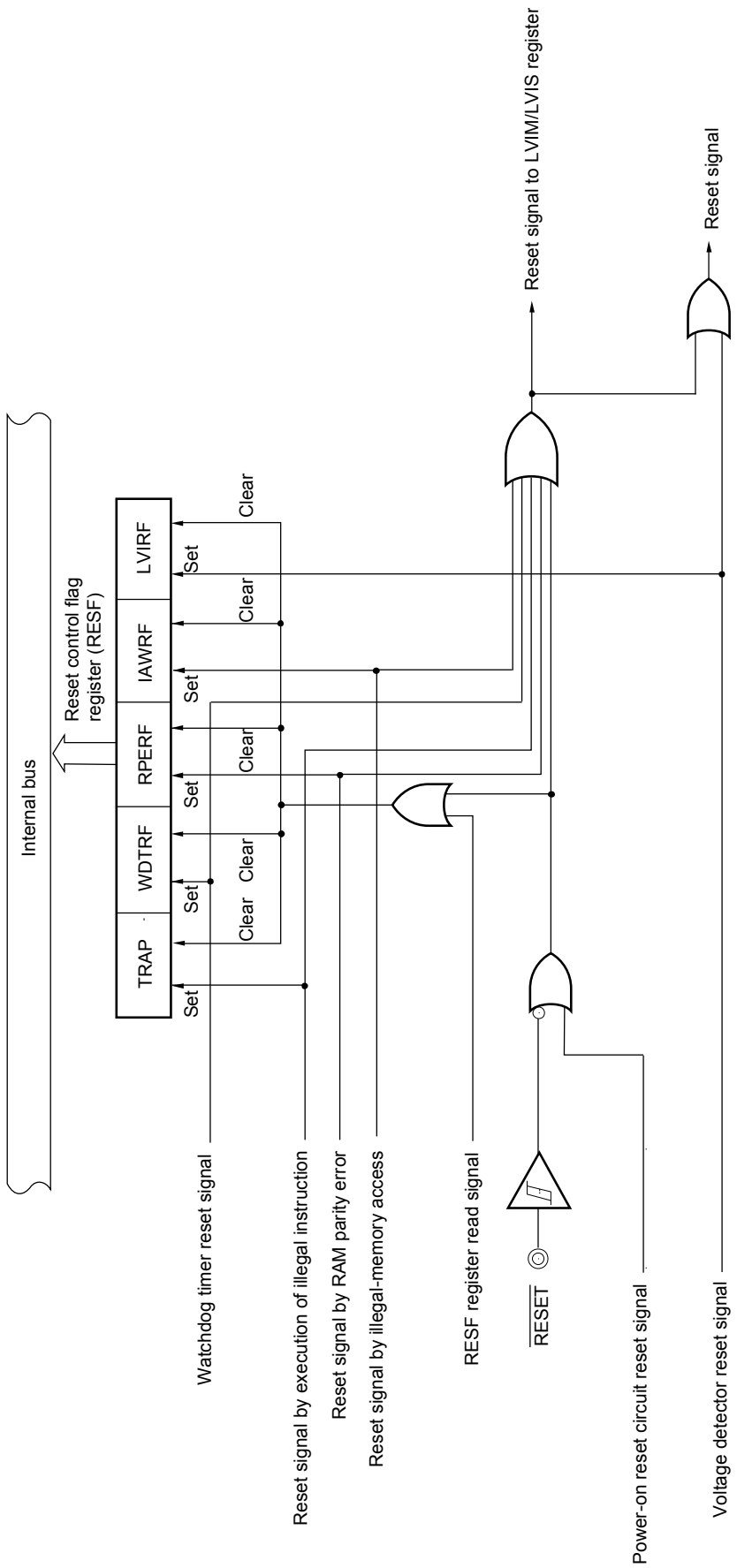

Caution An LVD circuit internal reset does not reset the LVD circuit.

Remarks 1. LVIM: Voltage detection register
2. LVIS: Voltage detection level register

20.1 Timing of Reset Operation

This LSI is reset by input of the low level on the $\overline{\text{RESET}}$ pin and released from the reset state by input of the high level on the $\overline{\text{RESET}}$ pin. After reset processing, execution of the program with the high-speed on-chip oscillator clock as the operating clock starts.

Figure 20-2. Timing of Reset by $\overline{\text{RESET}}$ Input

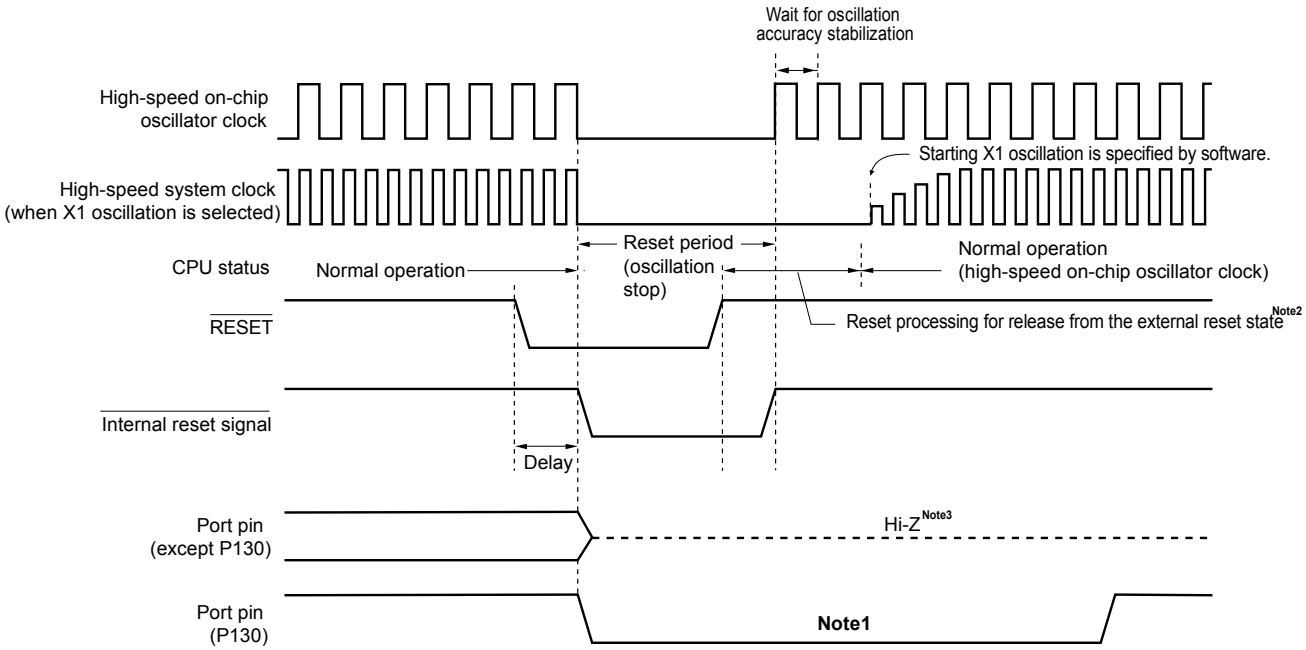

Release from the reset state is automatic in the case of a reset due to a watchdog timer overflow, execution of an illegal instruction, detection of a RAM parity error, or detection of illegal memory access. After reset processing, execution of the program with the high-speed on-chip oscillator clock as the operating clock starts.

Figure 20-3. Timing of Reset Due to Watchdog Timer Overflow, Execution of Illegal Instruction, Detection of RAM Parity Error, or Detection of Illegal Memory Access Overflow

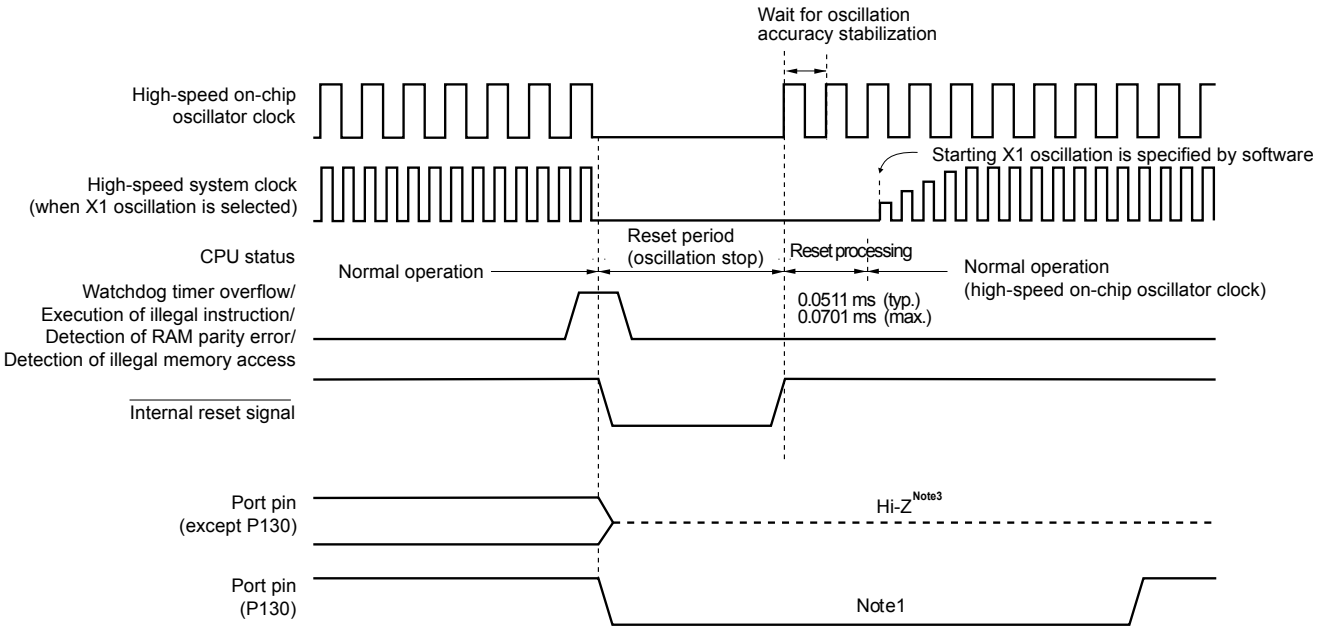

(**Notes** and **Caution** are listed on the next page.)

Notes 1. When P130 is set to high-level output before reset is effected, the output signal of P130 can be dummy-output as a reset signal to an external device, because P130 outputs a low level when reset is effected. To release a reset signal to an external device, set P130 to high-level output by software.

2. Reset times (times for release from the external reset state)

After the first release of the POR: 0.672 ms (typ.), 0.832 ms (max.) when the LVD is in use.
0.399 ms (typ.), 0.519 ms (max.) when the LVD is off.

After the second release of the POR: 0.531 ms (typ.), 0.675 ms (max.) when the LVD is in use.
0.259 ms (typ.), 0.362 ms (max.) when the LVD is off.

After power is supplied, a voltage stabilization waiting time of about 0.99 ms (typ.) and up to 2.30 ms (max.) is required before reset processing starts after release of the external reset.

3. The state of P40 is as follows.

- High-impedance during the external reset period or reset period by the POR.
- High level during other types of reset or after receiving a reset signal (connected to the internal pull-up resistor).

Reset by POR and LVD circuit supply voltage detection is automatically released when $V_{DD} \geq V_{POR}$ or $V_{DD} \geq V_{LVD}$ after the reset. After reset processing, execution of the program with the high-speed on-chip oscillator clock as the operating clock starts. For details, see **CHAPTER 21 POWER-ON-RESET CIRCUIT** or **CHAPTER 22 VOLTAGE DETECTOR**.

20.2 States of Operation During Reset Periods

Table 20-1 shows the states of operation during reset periods. Table 20-2 shows the states of the hardware after receiving a reset signal.

Table 20-1. States of Operation During Reset Period

Item			During Reset Period
System clock			Clock supply to the CPU is stopped.
	Main system clock	f_{IH}	Operation stopped
		f_X	Operation stopped (the X1 and X2 pins are input port mode)
		f_{EX}	Clock input invalid (the pin is input port mode)
	Subsystem clock	f_{XT}	Operation stopped (the XT1 and XT2 pins are input port mode)
		f_{EXS}	Clock input invalid (the pin is input port mode)
	f_{IL}		Operation stopped
CPU			Operation stopped
Code flash memory			Operation stopped
Data flash memory			Operation stopped
RAM			Operation stopped
Port (latch)			High impedance Note
Timer array unit			Operation stopped
Real-time clock (RTC)			
12-bit interval timer			
Watchdog timer			
Clock output/buzzer output			
A/D converter			
Serial array unit (SAU)			
Serial interface (IICA)			
Multiplier & divider, multiply-accumulator			
DMA controller			
Power-on-reset function			Detection operation possible
Voltage detection function			Operation is possible in the case of an LVD reset and stopped in the case of other types of reset.
External interrupt			Operation stopped
CRC operation function	High-speed CRC		
	General-purpose CRC		
RAM parity error detection function			
RAM guard function			
SFR guard function			
Illegal-memory access detection function			

Note P40 and P130 become the following state.

- P40: High-impedance during the external reset period or reset period by the POR. High level during other types of reset (connected to the internal pull-up resistor).
- P130: Low level during the reset period

(**Remark** is listed on the next page.)

Remark f_{IH}: High-speed on-chip oscillator clock
f_X: X1 oscillation clock
f_{EX}: External main system clock
f_{XT}: XT1 oscillation clock
f_{EXS}: External subsystem clock
f_{IL}: Low-speed on-chip oscillator clock

Table 20-2. State of Hardware After Receiving a Reset Signal

Hardware		After Reset Acknowledgment[Note]
Program counter (PC)		The contents of the reset vector table (0000H, 0001H) are set.
Stack pointer (SP)		Undefined
Program status word (PSW)		06H
RAM	Data memory	Undefined
	General-purpose registers	Undefined

Note During reset signal generation or oscillation stabilization time wait, only the PC contents among the hardware statuses become undefined. All other hardware statuses remain unchanged after reset.

Remark For the state of the special function register (SFR) after receiving a reset signal, see **4.1.4 Special function register (SFR) are**a and **4.1.5 Extended special function register (2nd SFR: 2nd Special Function Register) area**.

20.3 Register for Confirming Reset Source

20.3.1 Reset control flag register (RESF)

Many internal reset generation sources exist in the RL78 microcontroller. The reset control flag register (RESF) is used to store which source has generated the reset request.

The RESF register can be read by an 8-bit memory manipulation instruction.

$\overline{\text{RESET}}$ input, reset by power-on-reset (POR) circuit, and reading the RESF register clear TRAP, WDTRF, RPERF, IAWRF, and LVIRF flags.

Figure 20-4. Format of Reset Control Flag Register (RESF)

Address: FFFA8H After reset: Undefined[Note 1] R

Symbol	7	6	5	4	3	2	1	0
RESF	TRAP	0	0	WDTRF	0	RPERF	IAWRF	LVIRF

TRAP	Internal reset request by execution of illegal instruction[Note 2]
0	Internal reset request is not generated, or the RESF register is cleared.
1	Internal reset request is generated.

WDTRF	Internal reset request by watchdog timer (WDT)
0	Internal reset request is not generated, or the RESF register is cleared.
1	Internal reset request is generated.

RPERF	Internal reset request t by RAM parity
0	Internal reset request is not generated, or the RESF register is cleared.
1	Internal reset request is generated.

IAWRF	Internal reset request t by illegal-memory access
0	Internal reset request is not generated, or the RESF register is cleared.
1	Internal reset request is generated.

LVIRF	Internal reset request by voltage detector (LVD)
0	Internal reset request is not generated, or the RESF register is cleared.
1	Internal reset request is generated.

Notes 1. The value after reset varies depending on the reset source. See **Table 20-3**.

2. The illegal instruction is generated when instruction code FFH is executed.
Reset by the illegal instruction execution not issued by emulation with the in-circuit emulator or on-chip debug emulator.

Cautions 1. Do not read data by a 1-bit memory manipulation instruction.

2. When enabling RAM parity error resets (RPERDIS = 0), be sure to initialize the used RAM area at data access or the used RAM area + 10 bytes at execution of instruction from the RAM area. Reset generation enables RAM parity error resets (RPERDIS = 0). For details, see 23.3.3 RAM parity error detection function.

The status of the RESF register when a reset request is generated is shown in Table 20-3.

Table 20-3. RESF Register Status When Reset Request Is Generated

Flag \ Reset Source	$\overline{\text{RESET}}$ Input	Reset by POR	Reset by Execution of Illegal Instruction	Reset by WDT	Reset by RAM parity error	Reset by illegal-memory access	Reset by LVD
TRAP bit	Cleared (0)	Cleared (0)	Set (1)	Held	Held	Held	Held
WDTRF bit			Held	Set (1)			
RPERF bit				Held	Set (1)		
IAWRF bit					Held	Set (1)	
LVIRF bit						Held	Set (1)

The RESF register is automatically cleared when it is read by an 8-bit memory manipulation instruction. Figure 20-5 shows the procedure for checking a reset source.

Figure 20-5. Example of Procedure for Checking Reset Source

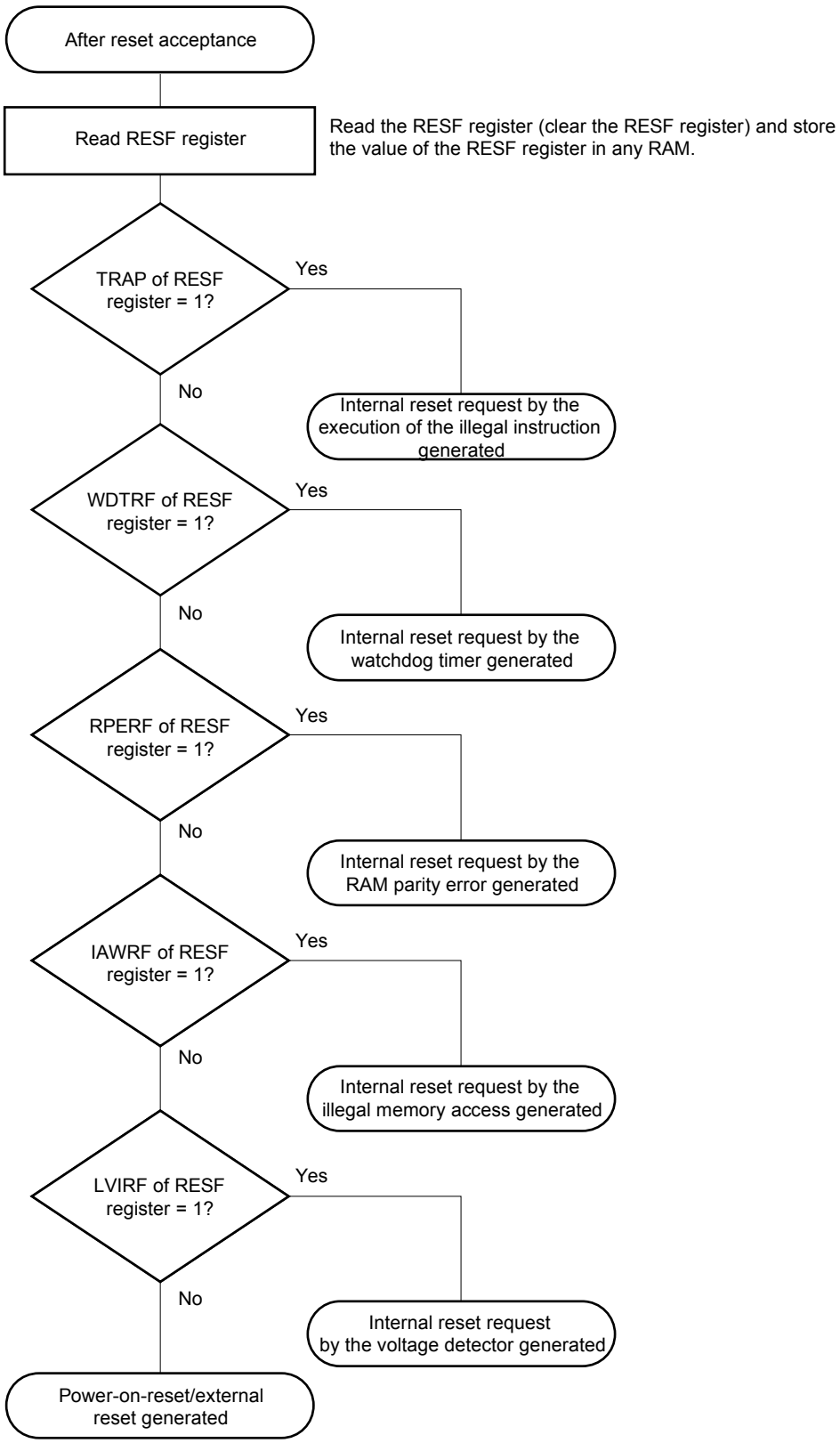

The flow described above is an example of the procedure for checking.

CHAPTER 21 POWER-ON-RESET CIRCUIT

21.1 Functions of Power-on-reset Circuit

The power-on-reset circuit (POR) has the following functions.

- Generates internal reset signal at power on.
  The reset signal is released when the supply voltage (V_{DD}) exceeds the detection voltage (V_{POR}). Note that the reset state must be retained until the operating voltage becomes in the range defined in **30.6 AC Characteristics**. This is done by utilizing the voltage detection circuit or controlling the externally input reset signal.

- Compares supply voltage (V_{DD}) and detection voltage (V_{PDR}), generates internal reset signal when $V_{DD} < V_{PDR}$. Note that, after power is supplied, this LSI should be placed in the STOP mode, or in the reset state by utilizing the voltage detection circuit or externally input reset signal, before the operation voltage falls below the range defined in **30.6 AC Characteristics**. When restarting the operation, make sure that the operation voltage has returned within the range of operation.

Caution If an internal reset signal is generated in the power-on-reset circuit, the reset control flag register (RESF) is cleared.

Remarks 1. The RL78 microcontroller incorporates multiple hardware functions that generate an internal reset signal. A flag that indicates the reset source is located in the reset control flag register (RESF) for when an internal reset signal is generated by the watchdog timer (WDT), voltage-detector (LVD), illegal instruction execution, RAM parity error, or illegal-memory access. The RESF register is not cleared to 00H and the flag is set to 1 when an internal reset signal is generated by the watchdog timer (WDT), voltage-detector (LVD), illegal instruction execution, RAM parity error, or illegal-memory access.
For details of the RESF register, see **CHAPTER 20 RESET FUNCTION**.

2. V_{POR}: POR power supply rise detection voltage
V_{PDR}: POR power supply fall detection voltage
For details, see **30.8.3 POR circuit characteristics**.

21.2 Configuration of Power-on-reset Circuit

The block diagram of the power-on-reset circuit is shown in Figure 21-1.

Figure 21-1. Block Diagram of Power-on-reset Circuit

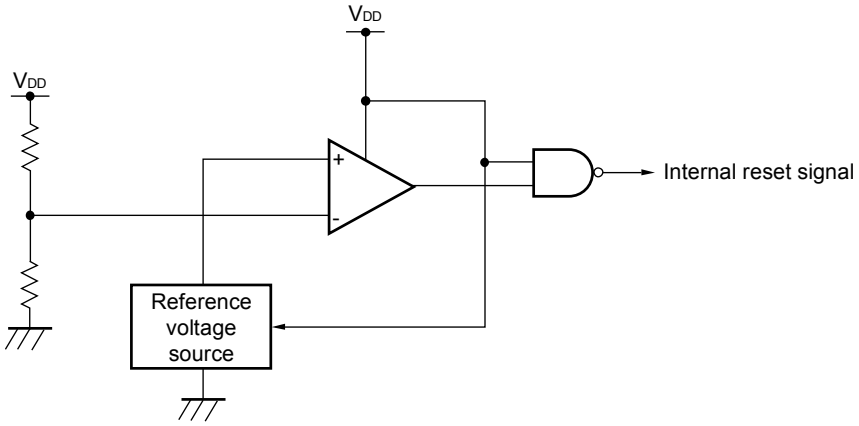

21.3 Operation of Power-on-reset Circuit

The timing of generation of the internal reset signal by the power-on-reset circuit and voltage detector is shown below.

Figure 21-2. Timing of Generation of Internal Reset Signal by Power-on-reset Circuit and Voltage Detector (1/3)

(a) When the externally input reset signal on the RESET pin is used

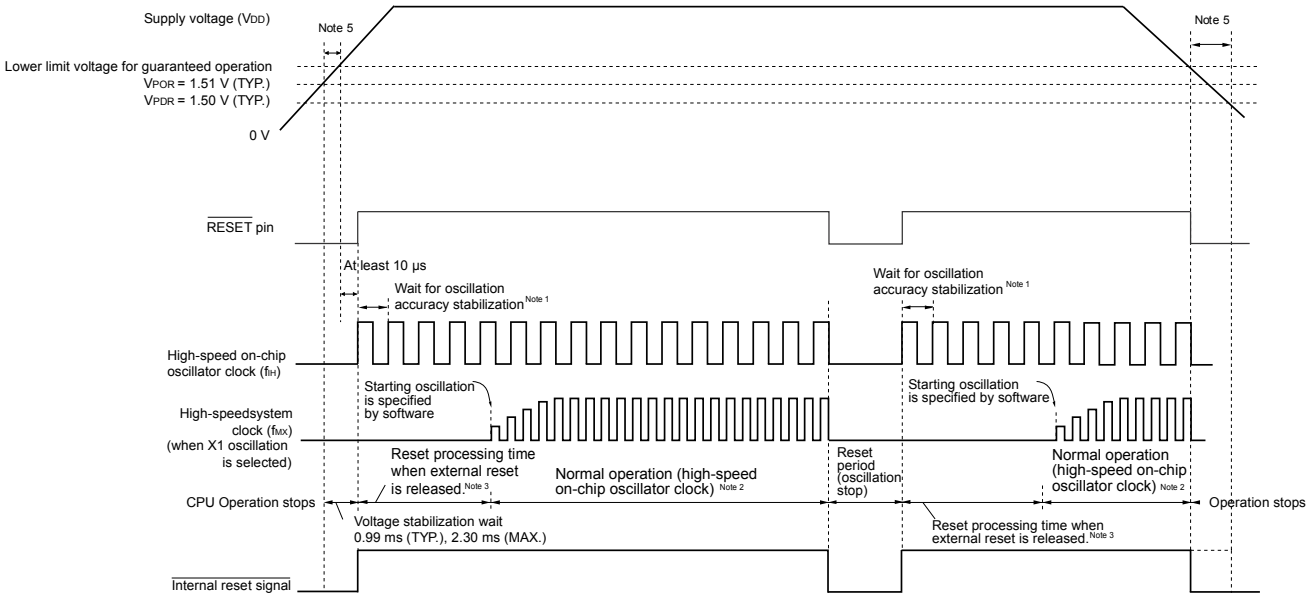

Notes 1. The internal reset processing time includes the oscillation accuracy stabilization time of the high-speed on-chip oscillator clock.

2. The high-speed on-chip oscillator clock and a high-speed system clock or subsystem clock can be selected as the CPU clock. To use the X1 clock, use the oscillation stabilization time counter status register (OSTC) to confirm the lapse of the oscillation stabilization time. To use the XT1 clock, use the timer function for confirmation of the lapse of the stabilization time.

3. The time until normal operation starts includes the following reset processing time when the external reset is released (after the first release of POR) after the $\overline{\text{RESET}}$ signal is driven high (1) as well as the voltage stabilization wait time after VPOR (1.51 V, typ.) is reached.

Reset processing time when the external reset is released is shown below.

After the first release of POR: 0.672 ms (typ.), 0.832 ms (max.) (when the LVD is in use)
0.399 ms (typ.), 0.519 ms (max.) (when the LVD is off)

4. Reset processing time when the external reset is released after the second release of POR is shown below.

After the second release of POR: 0.531 ms (typ.), 0.675 ms (max.) (when the LVD is in use)
0.259 ms (typ.), 0.362 ms (max.) (when the LVD is off)

5. After power is supplied, the reset state must be retained until the operating voltage becomes in the range defined in **30.6 AC Characteristics**. This is done by controlling the externally input reset signal. After power supply is turned off, this LSI should be placed in the STOP mode, or in the reset state by utilizing the voltage detection circuit or externally input reset signal, before the voltage falls below the operating range. When restarting the operation, make sure that the operation voltage has returned within the range of operation.

Remark V_{POR}: POR power supply rise detection voltage
V_{PDR}: POR power supply fall detection voltage

Caution For power-on reset, be sure to use the externally input reset signal on the $\overline{\text{RESET}}$ pin when the LVD is off. For details, see CHAPTER 22 VOLTAGE DETECTOR.

Figure 21-2. Timing of Generation of Internal Reset Signal by Power-on-reset Circuit and Voltage Detector (2/3)

(b) LVD interrupt & reset mode (option byte 000C1: LVIMDS1, LVIMDS0 = 1, 0)

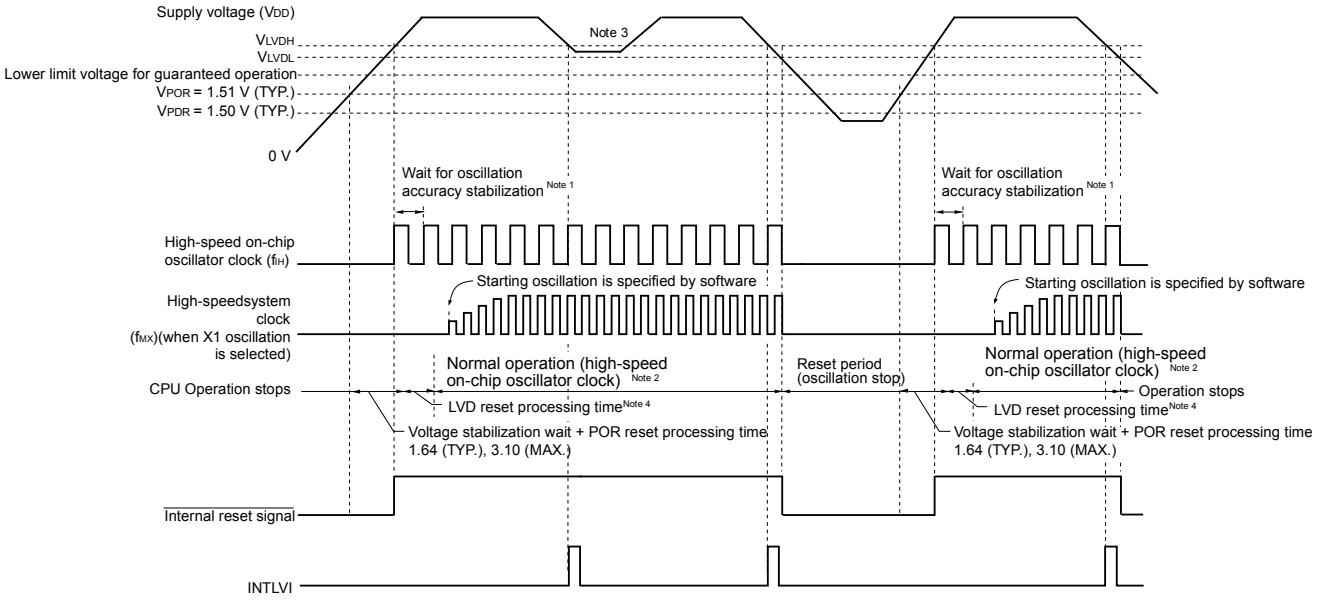

Notes 1. The internal reset processing time includes the oscillation accuracy stabilization time of the high-speed on-chip oscillator clock.

2. The high-speed on-chip oscillator clock and a high-speed system clock or subsystem clock can be selected as the CPU clock. To use the X1 clock, use the oscillation stabilization time counter status register (OSTC) to confirm the lapse of the oscillation stabilization time. To use the XT1 clock, use the timer function for confirmation of the lapse of the stabilization time.

3. After the interrupt request signal (INTLVI) is generated, the LVILV and LVIMD bits of the voltage detection level register (LVIS) are automatically set to 1. After INTLVI is generated, appropriate settings should be made according to **Figure 22-8 Processing Procedure After an Interrupt Is Generated** and **Figure 22-9 Initial Setting of Interrupt and Reset Mode**, taking into consideration that the supply voltage might return to the high voltage detection level (V_{LVDH}) or higher without falling below the low voltage detection level (V_{LVDL}).

4. The time until normal operation starts includes the following LVD reset processing time after the LVD detection level (V_{LVDH}) is reached as well as the voltage stabilization wait + POR reset processing time after the V_{POR} (1.51 V, typ.) is reached.
LVD reset processing time: 0 ms to 0.0701 ms (max.)

Remark V_{LVDH}, V_{LVDL}: LVD detection voltage
V_{POR}: POR power supply rise detection voltage
V_{PDR}: POR power supply fall detection voltage

Figure 21-2. Timing of Generation of Internal Reset Signal by Power-on-reset Circuit and Voltage Detector (3/3)

(c) LVD reset mode (option byte 000C1H: LVIMDS1 = 1, LVIMDS0 = 1)

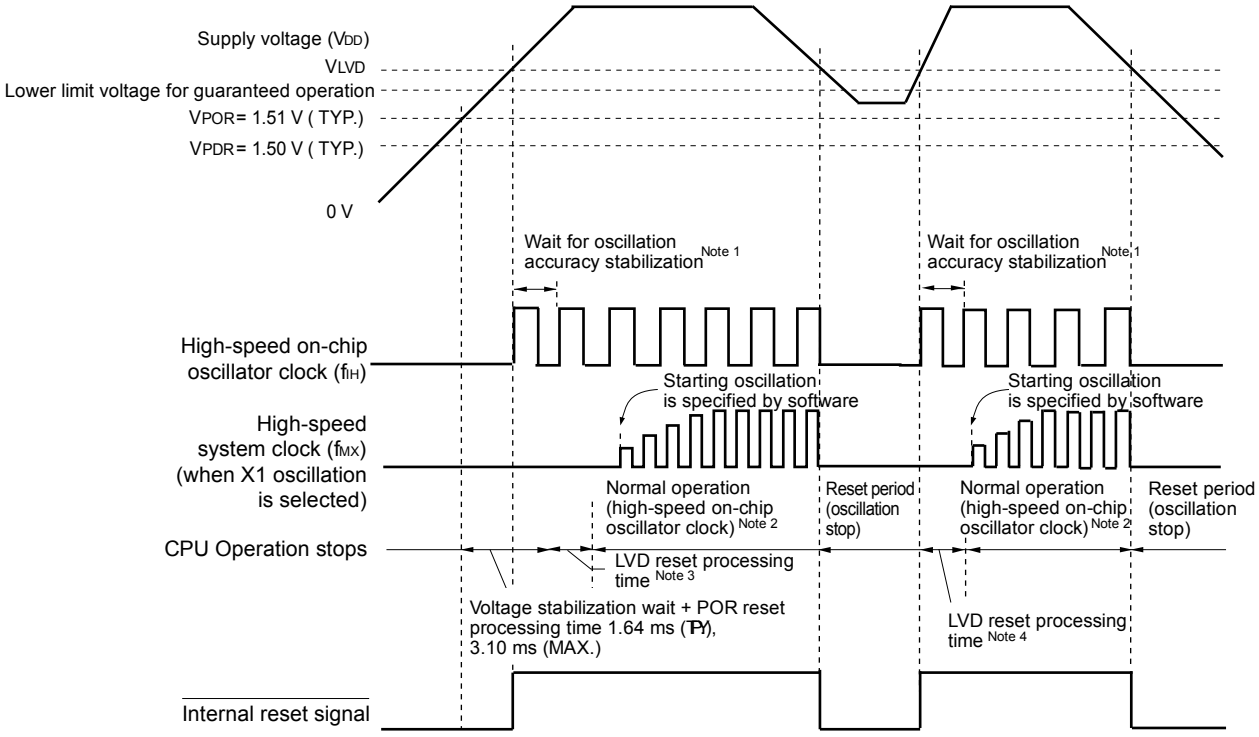

Notes 1. The internal reset processing time includes the oscillation accuracy stabilization time of the high-speed on-chip oscillator clock.

2. The high-speed on-chip oscillator clock and a high-speed system clock or subsystem clock can be selected as the CPU clock. To use the X1 clock, use the oscillation stabilization time counter status register (OSTC) to confirm the lapse of the oscillation stabilization time. To use the XT1 clock, use the timer function for confirmation of the lapse of the stabilization time.

3. The time until normal operation starts includes the following LVD reset processing time after the LVD detection level (V_{LVD}) is reached as well as the voltage stabilization wait + POR reset processing time after the V_{POR} (1.51 V, typ.) is reached.
LVD reset processing time: 0 ms to 0.0701 ms (max.)

4. When the power supply voltage is below the lower limit for operation and the power supply voltage is then restored after an internal reset is generated only by the voltage detector (LVD), the following LVD reset processing time is required after the LVD detection level (V_{LVD}) is reached.
LVD reset processing time: 0.0511 ms (typ.), 0.0701 ms (max.)

Remarks 1. V_{LVDH}, V_{LVDL}: LVD detection voltage
V_{POR}: POR power supply rise detection voltage
V_{PDR}: POR power supply fall detection voltage

2. When the LVD interrupt mode is selected (option byte 000C1H: LVIMD1 = 0, LVIMD0 = 1), the time until normal operation starts after power is turned on is the same as the time specified in **Note 3** of Figure 21-2 (3).

CHAPTER 22 VOLTAGE DETECTOR

22.1 Functions of Voltage Detector

The operation mode and detection voltages (V_{LVDH}, V_{LVDL}, V_{LVD}) for the voltage detector is set by using the option byte (000C1H).

The voltage detector (LVD) has the following functions.

- The LVD circuit compares the supply voltage (V_{DD}) with the detection voltage (V_{LVDH}, V_{LVDL}, V_{LVD}), and generates an internal reset or internal interrupt signal.
- The detection level for the power supply detection voltage (V_{LVDH}, V_{LVDL}, V_{LVD}) can be selected by using the option byte as one of 12 levels (For details, see **CHAPTER 25 OPTION BYTE**).
- Operable in STOP mode.
- After power is supplied, the reset state must be retained until the operating voltage becomes in the range defined in **30.6 AC Characteristics**. This is done by utilizing the voltage detection circuit or controlling the externally input reset signal. After the power supply is turned off, this LSI should be placed in the STOP mode, or placed in the reset state by utilizing the voltage detection circuit or controlling the externally input reset signal before the voltage falls below the operating range. The range of operating voltage varies with the setting of the user option byte (000C2H or 010C2H).

(a) Interrupt & reset mode (option byte LVIMDS1, LVIMDS0 = 1, 0)

The two detection voltages (V_{LVDH}, V_{LVDL}) are selected by the option byte 000C1H. The high-voltage detection level (V_{LVDH}) is used for releasing resets and generating interrupts. The low-voltage detection level (V_{LVDL}) is used for generating resets.

(b) Reset mode (option byte LVIMDS1, LVIMDS0 = 1, 1)

The detection voltage (V_{LVD}) selected by the option byte 000C1H is used for generating/releasing resets.

(c) Interrupt mode (option byte LVIMDS1, LVIMDS0 = 0, 1)

The detection voltage (V_{LVD}) selected by the option byte 000C1H is used for releasing resets/generating interrupts.

The reset and internal interrupt signals are generated in each mode as follows.

Interrupt & reset mode (LVIMDS1, LVIMDS0 = 1, 0)	Reset mode (LVIMDS1, LVIMDS0 = 1, 1)	Interrupt mode (LVIMDS1, LVIMDS0 = 0, 1)
Generates an interrupt request signal by detecting $V_{DD} < V_{LVDH}$ when the operating voltage falls, and an internal reset by detecting $V_{DD} < V_{LVDL}$. Releases an internal reset by detecting $V_{DD} \geq V_{LVDH}$.	Releases an internal reset by detecting $V_{DD} \geq V_{LVD}$. Generates an internal reset signal by detecting $V_{DD} < V_{LVD}$.	Retains the state of an internal reset by the LVD immediately after a reset until $V_{DD} \geq V_{LVD}$. Releases the LVD internal reset by detecting $V_{DD} \geq V_{LVD}$. Generates an interrupt request signal (INTLVI) by detecting $V_{DD} < V_{LVD}$ or $V_{DD} \geq V_{LVD}$ after the LVD internal reset is released.

While the voltage detector is operating, whether the supply voltage is more than or less than the detection level can be checked by reading the voltage detection flag (LVIF: bit 0 of the voltage detection register (LVIM)).

Bit 0 (LVIRF) of the reset control flag register (RESF) is set to 1 if reset occurs. For details of the RESF register, see **CHAPTER 20 RESET FUNCTION**.

22.2 Configuration of Voltage Detector

The block diagram of the voltage detector is shown in Figure 22-1.

Figure 22-1. Block Diagram of Voltage Detector

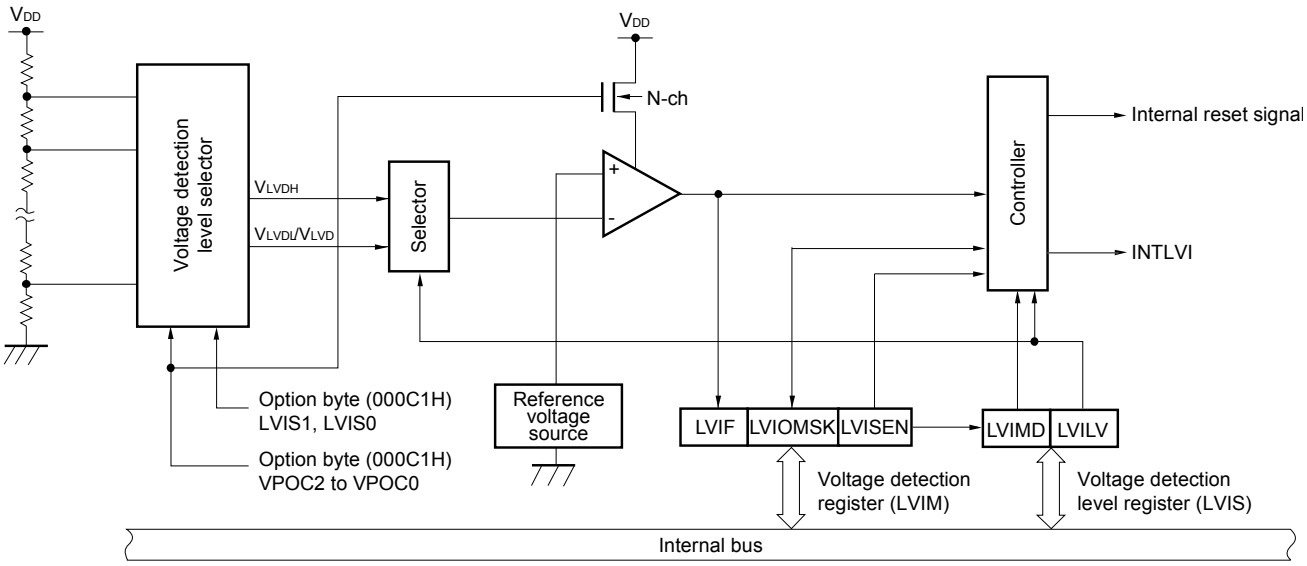

22.3 Registers Controlling Voltage Detector

The voltage detector is controlled by the following registers.

- Voltage detection register (LVIM)
- Voltage detection level register (LVIS)

22.3.1 Voltage detection register (LVIM)

This register is used to specify whether to enable or disable rewriting the voltage detection level register (LVIS), as well as to check the LVD output mask status.

This register can be set by a 1-bit or 8-bit memory manipulation instruction.

Reset signal generation clears this register to 00H.

Figure 22-2. Format of Voltage Detection Register (LVIM)

Address: FFFA9H After reset: 00H Note 1 R/W Note 2

Symbol	<7>	6	5	4	3	2	<1>	<0>
LVIM	LVISEN Note 3	0	0	0	0	0	LVIOMSK	LVIF

LVISEN	Specification of whether to enable or disable rewriting the voltage detection level register (LVIS)
0	Disabling of rewriting the LVIS register (LVIOMSK = 0 (Mask of LVD output is invalid)
1	Enabling of rewriting the LVIS register (LVIOMSK = 1 (Mask of LVD output is valid)

LVIOMSK	Mask status flag of LVD output
0	Mask of LVD output is invalid
1	Mask of LVD output is valid Note 4

LVIF	Voltage detection flag
0	Supply voltage (V_{DD}) ≥ detection voltage (V_{LVD}), or when LVD is off
1	Supply voltage (V_{DD}) < detection voltage (V_{LVD})

Notes 1. The reset value changes depending on the reset source.
If the LVIS register is reset by LVD, it is not reset but holds the current value. In other reset, LVISEN is cleared to 0.

2. Bits 0 and 1 are read-only.

3. LVISEN and LVIOMSK can only be set in the interrupt & reset mode (option byte LVIMDS1, LVIMDS0 = 1, 0). Do not change the initial value in other modes.

4. LVIOMSK bit is only automatically set to “1” in the timing below when the interrupt & reset mode is selected (option byte LVIMDS1, LVIMDS0 = 1, 0) and reset or interrupt by LVD is masked.

- Period during LVISEN = 1
- Waiting period from the time when LVD interrupt is generated until LVD detection voltage becomes stable
- Waiting period from the time when the value of LVILV bit changes until LVD detection voltage becomes stable

22.3.2 Voltage detection level register (LVIS)

This register selects the voltage detection level.

This register can be set by a 1-bit or 8-bit memory manipulation instruction.

Reset signal generation input sets this register to 00H/01H/81H[Note 1].

Figure 22-3. Format of Voltage Detection Level Select Register (LVIS)

Address: FFFAAH After reset: 00H/01H/81H[Note 1] R/W

Symbol	<7>	6	5	4	3	2	1	<0>
LVIS	LVIMD	0	0	0	0	0	0	LVILV

LVIMD [Note 2]	Operation mode of voltage detection
0	Interrupt mode
1	Reset mode

LVILV [Note 2]	LVD detection level
0	High-voltage detection level (V_{LVDH})
1	Low-voltage detection level (V_{LVDL} or V_{LVD})

Notes 1. The reset value changes depending on the reset source and the setting of the option byte.
This register is not cleared (00H) by LVD reset.
The generation of reset signal other than an LVD reset sets as follows.
- When option byte LVIMDS1, LVIMDS0 = 1, 0: 00H
- When option byte LVIMDS1, LVIMDS0 = 1, 1: 81H
- When option byte LVIMDS1, LVIMDS0 = 0, 1: 01H

2. Writing “0” can only be allowed in the interrupt & reset mode (option byte LVIMDS1, LVIMDS0 = 1, 0). Do not set LVIMD and LVILV in other cases. The value is switched automatically when reset or interrupt is generated in the interrupt & reset mode.

Cautions 1. Rewrite the value of the LVIS register according to Figures 22-8 and 22-9.

2. Specify the LVD operation mode and detection voltage (V_{LVDH}, V_{LVDL}, V_{LVD}) of each mode by using the option byte 000C1H. Figure 22-4 shows the format of the user option byte (000C1H/010C1H). For details about the option byte, see CHAPTER 25 OPTION BYTE.

Figure 22-4. Format of User Option Byte (000C1H/010C1H) (1/2)

Address: 000C1H/010C1H [Note]

7	6	5	4	3	2	1	0
VPOC2	VPOC1	VPOC0	1	LVIS1	LVIS0	LVIMDS1	LVIMDS0

● LVD setting (interrupt & reset mode)

Detection voltage			Option byte setting value						
V_{LVDH}		V_{LVDL}	VPOC2	VPOC1	VPOC0	LVIS1	LVIS0	Mode setting	
Rising edge	Falling edge	Falling edge						LVIMDS1	LVIMDS0
1.77 V	1.73 V	1.63 V	0	0	0	1	0	1	0
1.88 V	1.84 V	1.63 V				0	1		
2.92 V	2.86 V					0	0		
1.98 V	1.94 V	1.84 V		0	1	1	0		
2.09 V	2.04 V					0	1		
3.13 V	3.06 V					0	0		
2.61 V	2.55 V	2.45 V		1	0	1	0		
2.71 V	2.65 V					0	1		
2.92 V	2.86 V	2.75 V		1	1	1	0		
3.02 V	2.96 V					0	1		
–			Setting of values other than above is prohibited.						

● LVD setting (reset mode)

Detection voltage		Option byte setting value						
V_{LVD}		VPOC2	VPOC1	VPOC0	LVIS1	LVIS0	Mode setting	
Rising edge	Falling edge						LVIMDS1	LVIMDS0
1.67 V	1.63 V	0	0	0	1	1	1	1
1.77 V	1.73 V		0	0	1	0		
1.88 V	1.84 V		0	1	1	1		
1.98 V	1.94 V		0	1	1	0		
2.09 V	2.04 V		0	1	0	1		
2.50 V	2.45 V		1	0	1	1		
2.61 V	2.55 V		1	0	1	0		
2.71 V	2.65 V		1	0	0	1		
2.81 V	2.75 V		1	1	1	1		
2.92 V	2.86 V		1	1	1	0		
3.02 V	2.96 V		1	1	0	1		
3.13 V	3.06 V		0	1	0	0		
–		Setting of values other than above is prohibited.						

Note Set the same value as 000C1H to 010C1H when the boot swap operation is used because 000C1H is replaced by 010C1H.

Remarks 1. For details on the LVD circuit, see **CHAPTER 22 VOLTAGE DETECTOR**.

2. The detection voltage is a TYP. value. For details, see **30.7.4 LVD circuit characteristics**.

(**Cautions** are listed on the next page.)

Figure 22-4. Format of User Option Byte (000C1H/010C1H) (2/2)

Address: 000C1H/010C1H [Note]

7	6	5	4	3	2	1	0
VPOC2	VPOC1	VPOC0	1	LVIS1	LVIS0	LVIMDS1	LVIMDS0

● LVD setting (interrupt mode)

Detection voltage		Option byte setting value						
V_{LVD}		VPOC2	VPOC1	VPOC0	LVIS1	LVIS0	Mode setting	
Rising edge	Falling edge						LVIMDS1	LVIMDS0
1.67 V	1.63 V	0	0	0	1	1	0	1
1.77 V	1.73 V		0	0	1	0		
1.88 V	1.84 V		0	1	1	1		
1.98 V	1.94 V		0	1	1	0		
2.09 V	2.04 V		0	1	0	1		
2.50 V	2.45 V		1	0	1	1		
2.61 V	2.55 V		1	0	1	0		
2.71 V	2.65 V		1	0	0	1		
2.81 V	2.75 V		1	1	1	1		
2.92 V	2.86 V		1	1	1	0		
3.02 V	2.96 V		1	1	0	1		
3.13 V	3.06 V		0	1	0	0		
–		Setting of values other than above is prohibited.						

● LVD setting (use of external reset input via $\overline{\text{RESET}}$ pin)

Detection voltage		Option byte setting value						
V_{LVD}		VPOC2	VPOC1	VPOC0	LVIS1	LVIS0	Mode setting	
Rising edge	Falling edge						LVIMDS1	LVIMDS0
–	–	1	×	×	×	×	×	1
–		Setting of values other than above is prohibited.						

Note Set the same value as 000C1H to 010C1H when the boot swap operation is used because 000C1H is replaced by 010C1H.

Cautions 1. Set bit 4 to 1.

2. After power is supplied, the reset state must be retained until the operating voltage becomes in the range defined in 30.6 AC Characteristics. This is done by utilizing the voltage detection circuit or controlling the externally input reset signal. After the power supply is turned off, this LSI should be placed in the STOP mode, or placed in the reset state by utilizing the voltage detection circuit or controlling the externally input reset signal, before the voltage falls below the operating range. The range of operating voltage varies with the setting of the user option byte (000C2H or 010C2H).

Remarks 1. ×: don't care

2. For details on the LVD circuit, see **CHAPTER 22 VOLTAGE DETECTOR**.

3. The detection voltage is a TYP. value. For details, see **30.8.4 LVD circuit characteristics**.

22.4 Operation of Voltage Detector

22.4.1 When used as reset mode

Specify the operation mode (the reset mode (LVIMDS1, LVIMDS0 = 1, 1)) and the detection voltage (V_{LVD}) by using the option byte 000C1H.

The operation is started in the following initial setting state when the reset mode is set.

- Bit 7 (LVISEN) of the voltage detection register (LVIM) is set to 0 (disable rewriting of voltage detection level register (LVIS))
- The initial value of the voltage detection level select register (LVIS) is set to 81H.
  Bit 7 (LVIMD) is 1 (reset mode).
  Bit 0 (LVILV) is 1 (low-voltage detection level: V_{LVD}).

- Operation in LVD reset mode
  In the reset mode (option byte LVIMDS1, LVIMDS0 = 1, 1), the state of an internal reset by LVD is retained until the supply voltage (V_{DD}) exceeds the voltage detection level (V_{LVD}) after power is supplied. The internal reset is released when the supply voltage (V_{DD}) exceeds the voltage detection level (V_{LVD}).
  At the fall of the operating voltage, an internal reset by LVD is generated when the supply voltage (V_{DD}) falls below the voltage detection level (V_{LVD}).

Figure 22-5 shows the timing of the internal reset signal generated in the LVD reset mode.

Figure 22-5. Timing of Voltage Detector Internal Reset Signal Generation (Option Byte LVIMDS1, LVIMDS0 = 1, 1)

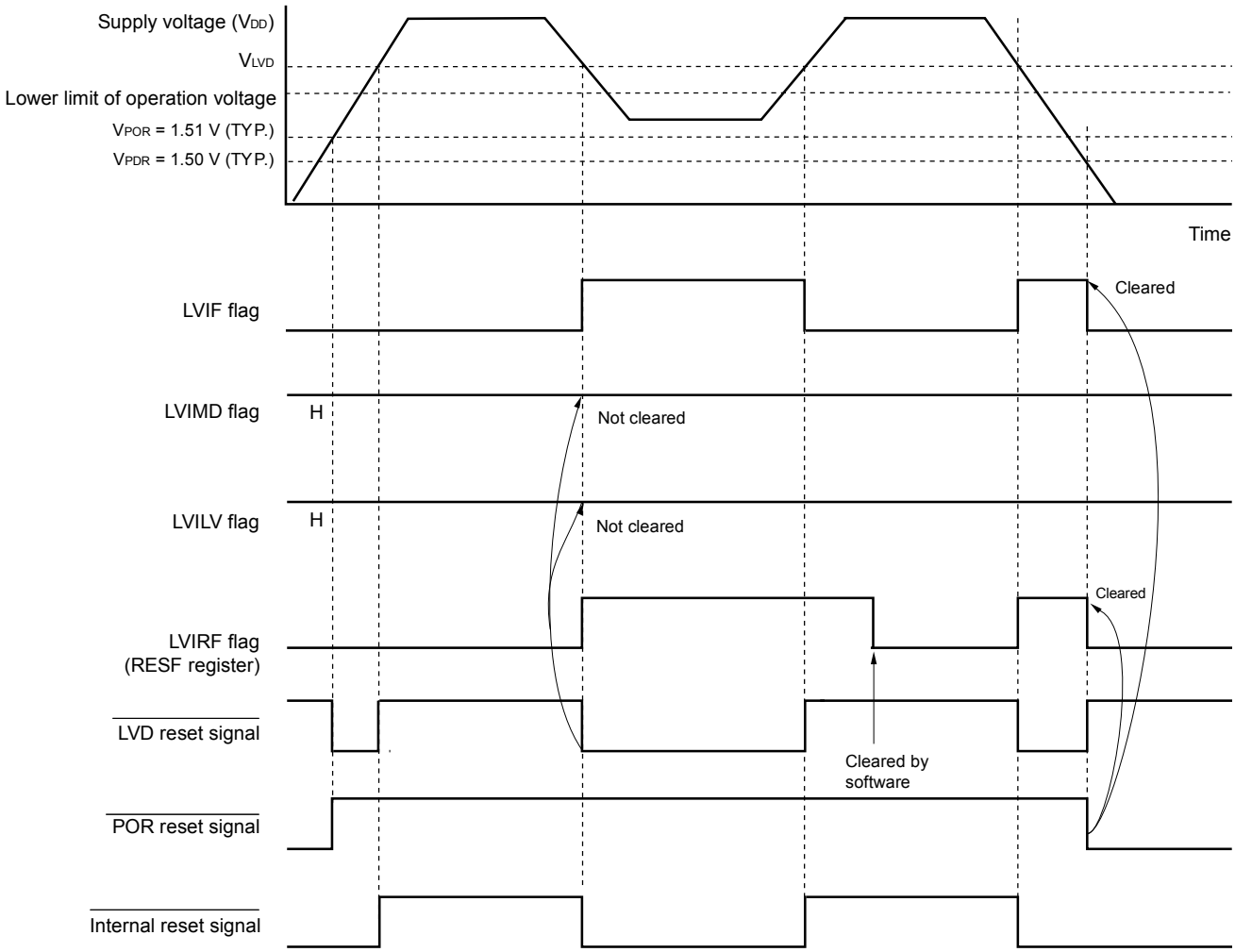

Remark V_{POR}: POR power supply rise detection voltage
V_{PDR}: POR power supply fall detection voltage

22.4.2 When used as interrupt mode

Specify the operation mode (the interrupt mode (LVIMDS1, LVIMDS0 = 0, 1)) and the detection voltage (V_{LVD}) by using the option byte 000C1H.

The operation is started in the following initial setting state when the interrupt mode is set.

- Bit 7 (LVISEN) of the voltage detection register (LVIM) is set to 0 (disable rewriting of voltage detection level register (LVIS))
- The initial value of the voltage detection level select register (LVIS) is set to 01H.
  Bit 7 (LVIMD) is 0 (interrupt mode).
  Bit 0 (LVILV) is 1 (low-voltage detection level: V_{LVD}).

- Operation in LVD interrupt mode
  In the interrupt mode (option byte LVIMDS1, LVIMDS0 = 0, 1), the state of an internal reset by LVD is retained immediately after a reset until the supply voltage (V_{DD}) exceeds the voltage detection level (V_{LVD}). The internal reset is released when the supply voltage (V_{DD}) exceeds the voltage detection level (V_{LVD}).
  After the LVD internal reset is released, an interrupt request signal (INTLVI) by the LVD is generated when the supply voltage (V_{DD}) exceeds the voltage detection level (V_{LVD}).
  When the voltage falls, this LSI should be placed in the STOP mode, or placed in the reset state by controlling the externally input reset signal, before the voltage falls below the operating voltage range defined in **30.6 AC characteristics**. When restarting the operation, make sure that the operation voltage has returned within the range of operation.

Figure 22-6 shows the timing of the interrupt request signal generated in the LVD interrupt mode.

Figure 22-6. Timing of Voltage Detector Internal Interrupt Signal Generation (Option Byte LVIMDS1, LVIMDS0 = 0, 1)

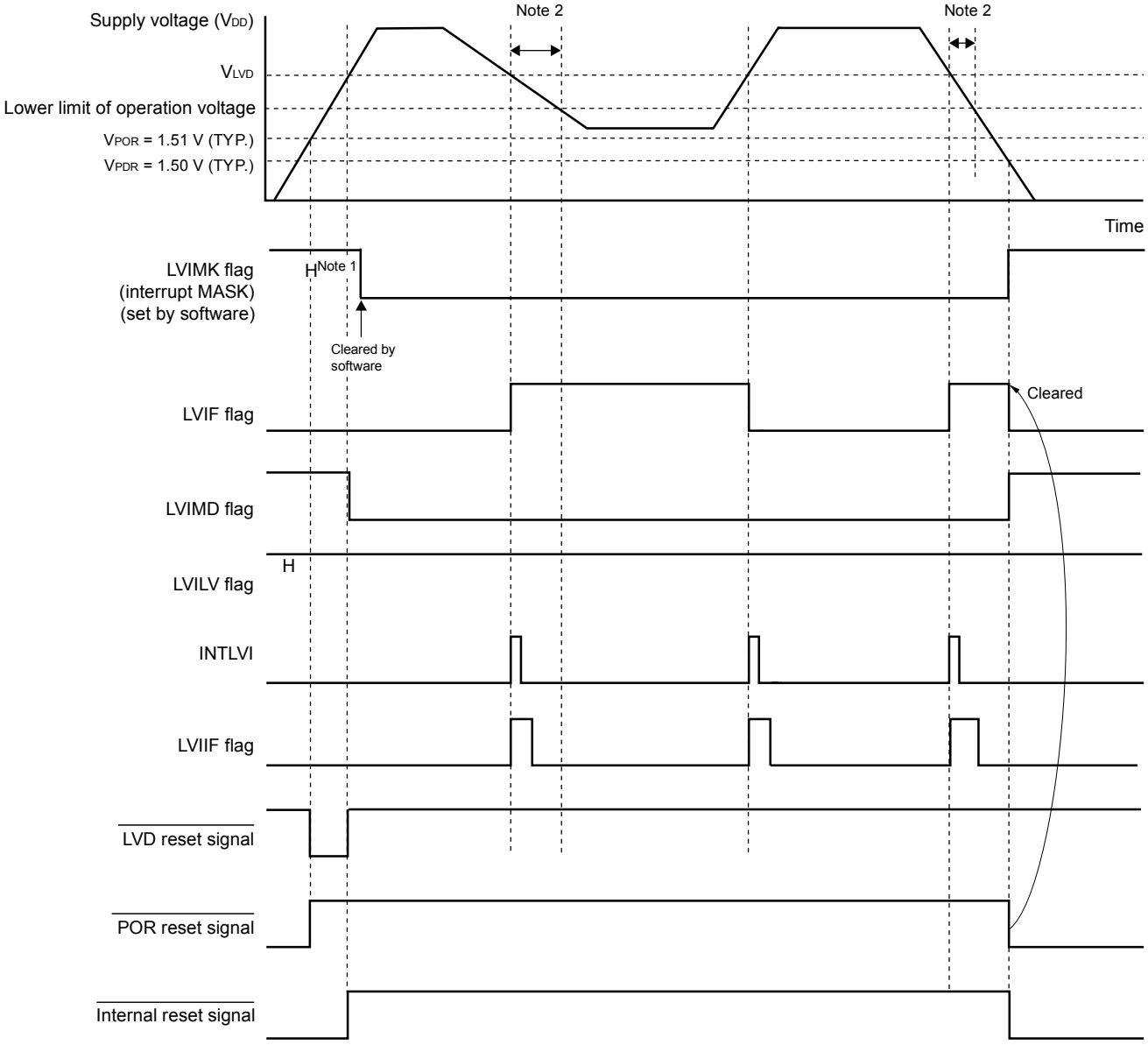

Notes 1. The LVIMK flag is set to “1” by reset signal generation.

2. When the voltage falls, this LSI should be placed in the STOP mode, or placed in the reset state by controlling the externally input reset signal, before the voltage falls below the operating voltage range defined in **30.6 AC characteristics**. When restarting the operation, make sure that the operation voltage has returned within the range of operation.

Remark V_{POR}: POR power supply rise detection voltage
V_{PDR}: POR power supply fall detection voltage

22.4.3 When used as interrupt & reset mode

Specify the operation mode (the interrupt & reset (LVIMDS1, LVIMDS0 = 1, 0)) and the detection voltage (V_{LVDH}, V_{LVDL}) by using the option byte 000C1H.

The operation is started in the following initial setting state when the interrupt & reset mode is set.

- Bit 7 (LVISEN) of the voltage detection register (LVIM) is set to 0 (disable rewriting of voltage detection level register (LVIS))
- The initial value of the voltage detection level select register (LVIS) is set to 00H.
  Bit 7 (LVIMD) is 0 (interrupt mode).
  Bit 0 (LVILV) is 0 (high-voltage detection level: V_{LVDH}).

- Operation in LVD interrupt & reset mode
  In the interrupt & reset mode (option byte LVIMDS1, LVIMDS0 = 1, 0), the state of an internal reset by LVD is retained until the supply voltage (V_{DD}) exceeds the high-voltage detection level (V_{LVDH}) after power is supplied. The internal reset is released when the supply voltage (V_{DD}) exceeds the high-voltage detection level (V_{LVDH}).
  An interrupt request signal by LVD (INTLVI) is generated and arbitrary save processing is performed when the supply voltage (V_{DD}) falls below the high-voltage detection level (V_{LVDH}). After that, an internal reset by LVD is generated when the supply voltage (V_{DD}) falls below the low-voltage detection level (V_{LVDL}). After INTLVD is generated, an interrupt request signal is not generated even if the supply voltage becomes equal to or higher than the high-voltage detection voltage (V_{LVDH}) without falling below the low-voltage detection voltage (V_{LVDL}).
  To use the LVD reset & interrupt mode, perform the processing according to **Figure 22-8 Processing Procedure After an Interrupt Is Generated** and **Figure 22-**setting**9 Initial Setting of Interrupt and Reset Mode**.

Figure 22-7 shows the timing of the internal reset signal and interrupt signal generated in the LVD interrupt & reset mode.

Figure 22-7. Timing of Voltage Detector Reset Signal and Interrupt Signal Generation (Option Byte LVIMDS1, LVIMDS0 = 1, 0) (1/2)

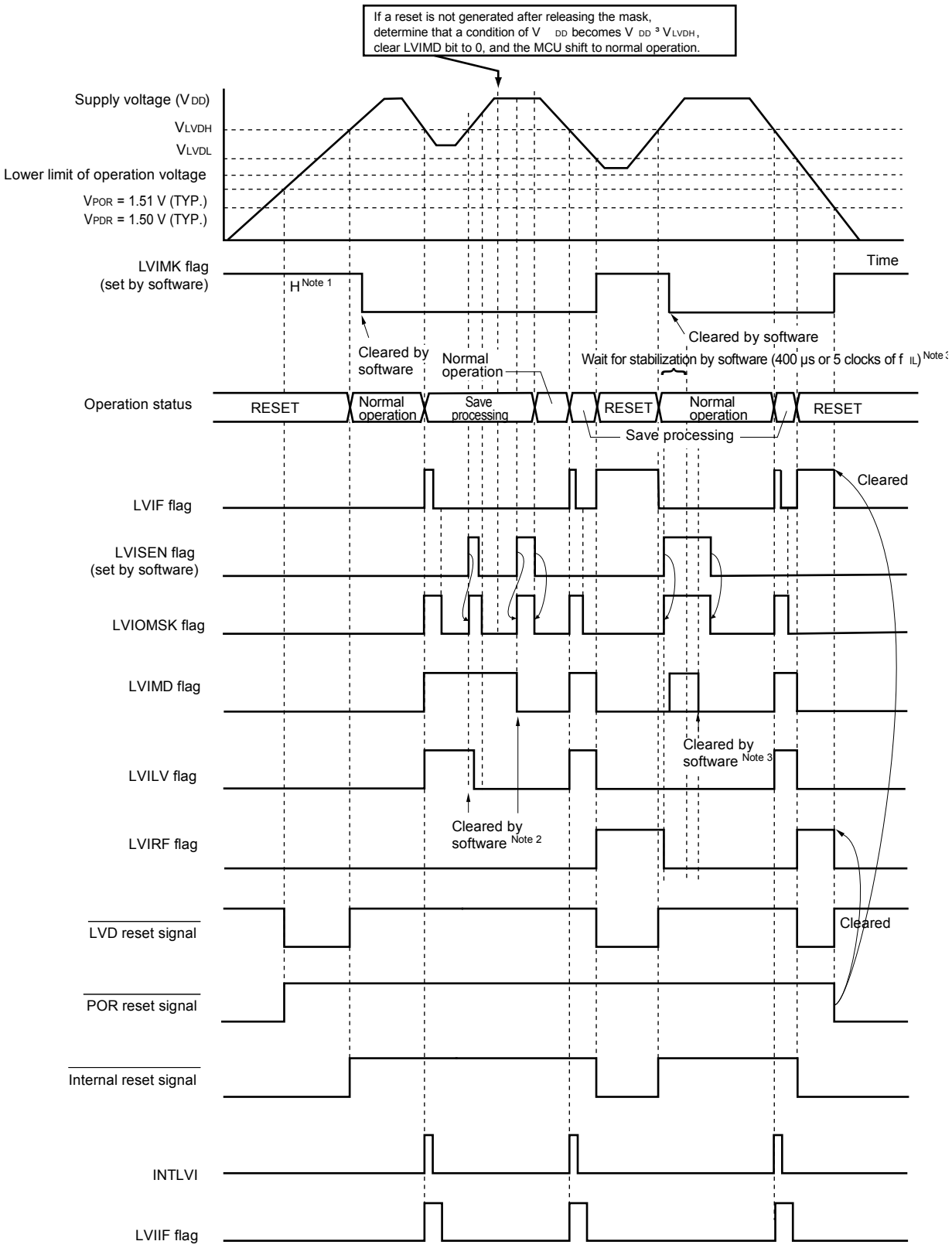

(**Notes** and **Remark** are listed on the next page.)

Notes 1. The LVIMK flag is set to “1” by reset signal generation.

2. After an interrupt is generated, perform the processing according to **Figure 22-8 Processing Procedure After an Interrupt Is Generated**.

3. After a reset is released, perform the processing according to **Figure 22-9 Initial Setting of Interrupt and Reset Mode**.

Remark V_{POR}: POR power supply rise detection voltage

V_{PDR}: POR power supply fall detection voltage

Figure 22-7. Timing of Voltage Detector Reset Signal and Interrupt Signal Generation (Option Byte LVIMDS1, LVIMDS0 = 1, 0) (2/2)

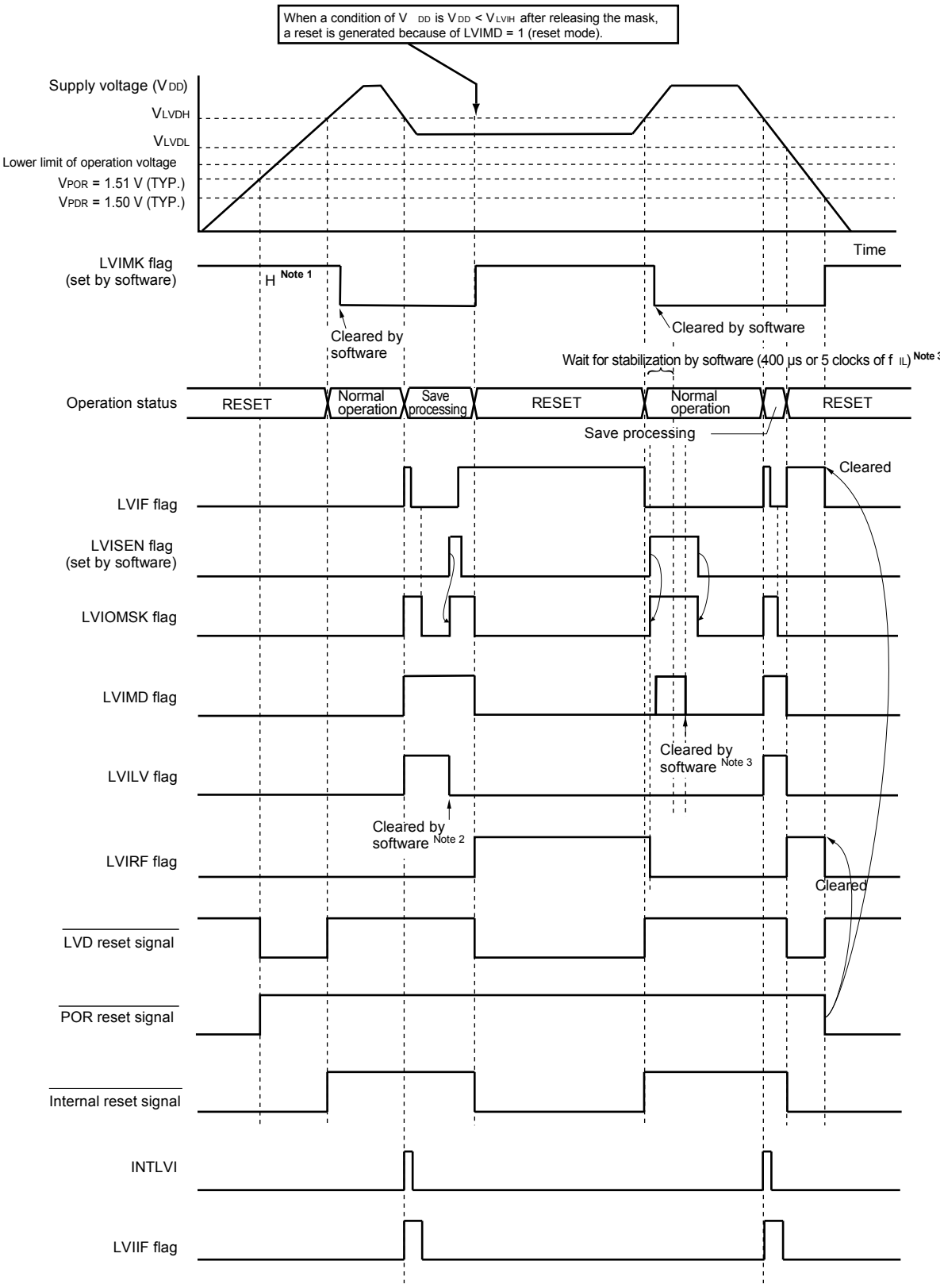

(**Notes** and **Remark** are listed on the next page.)

Notes 1. The LVIMK flag is set to “1” by reset signal generation.

2. After an interrupt is generated, perform the processing according to **Figure 22-8 Processing Procedure After an Interrupt Is Generated**.

3. After a reset is released, perform the processing according to **Figure 22-9 Initial Setting of Interrupt and Reset Mode**.

Remark V_{POR}: POR power supply rise detection voltage

V_{PDR}: POR power supply fall detection voltage

Figure 22-8. Processing Procedure After an Interrupt Is Generated

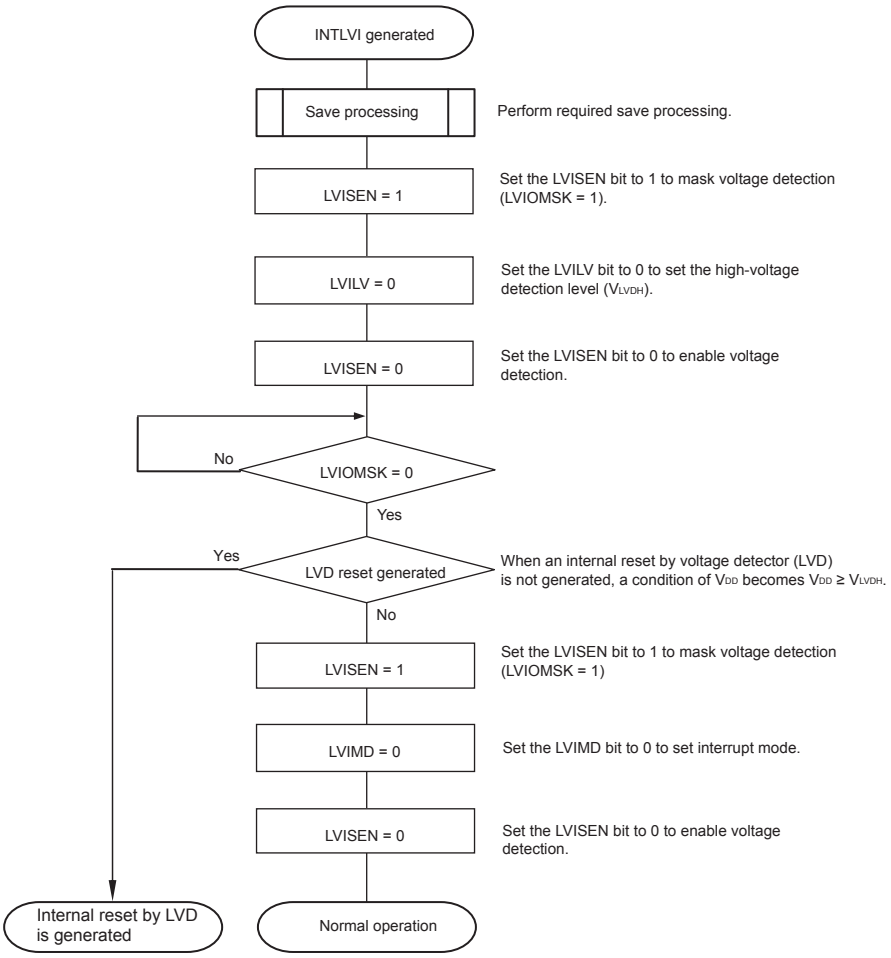

When setting an interrupt and reset mode (LVIMDS1, LVIMDS0 = 1, 0), voltage detection stabilization wait time for 400 μs or 5 clocks of f_{IL} is necessary after LVD reset is released (LVIRF = 1). After waiting until voltage detection stabilizes, (0) clear the LVIMD bit for initialization. While voltage detection stabilization wait time is being counted and when the LVIMD bit is rewritten, set LVISEN to 1 to mask a reset or interrupt generation by LVD.

Figure 22-9 shows the procedure for initial setting of interrupt and reset mode.

Figure 22-9. Initial Setting of Interrupt and Reset Mode

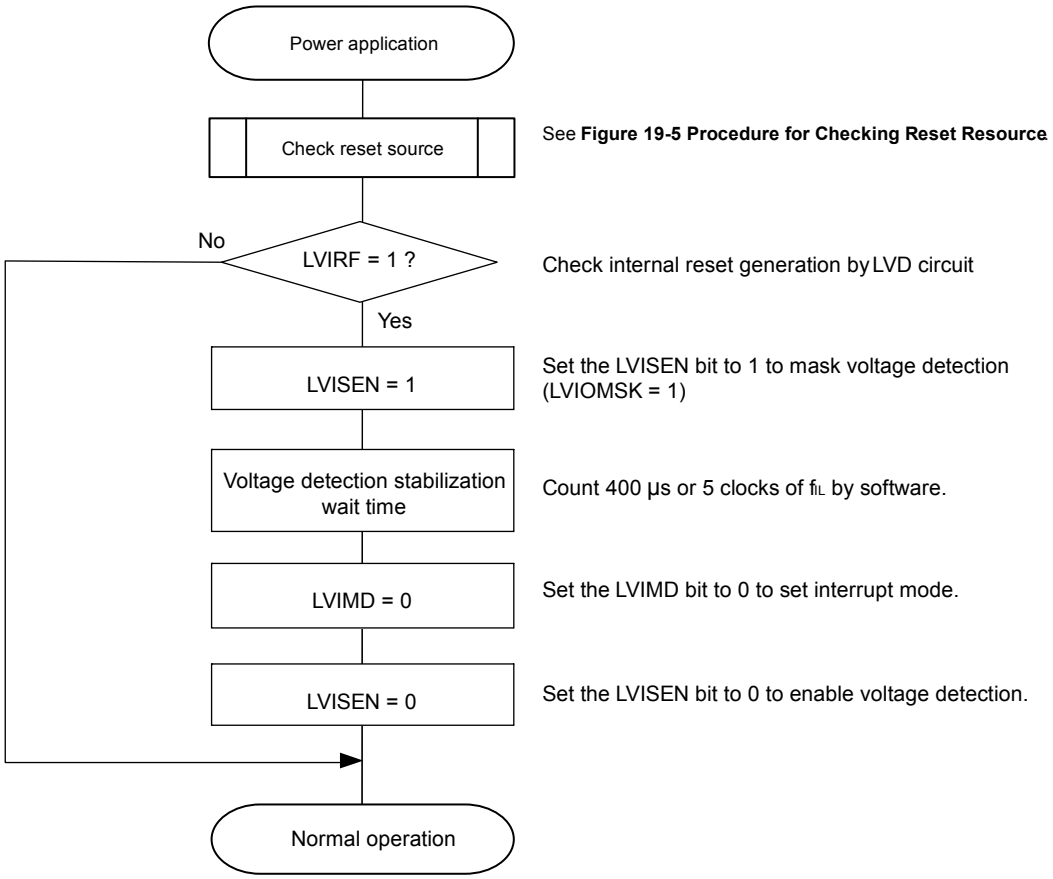

Remark f_{IL}: Low-speed on-chip oscillator clock frequency

22.5 Cautions for Voltage Detector

(1) In a system where the supply voltage (V_{DD}) fluctuates for a certain period in the vicinity of the LVD detection voltage, the system may be repeatedly reset and released from the reset status. In this case, the time from release of reset to the start of the operation of the microcontroller can be arbitrarily set by taking the following action.

<Action>

After releasing the reset signal, wait for the supply voltage fluctuation period of each system by means of a software counter that uses a timer, and then initialize the ports.

When a reset occurs, check the reset source by using the following method.

Figure 22-10. Example of Software Processing If Supply Voltage Fluctuation is 50 ms or Less in Vicinity of LVD Detection Voltage

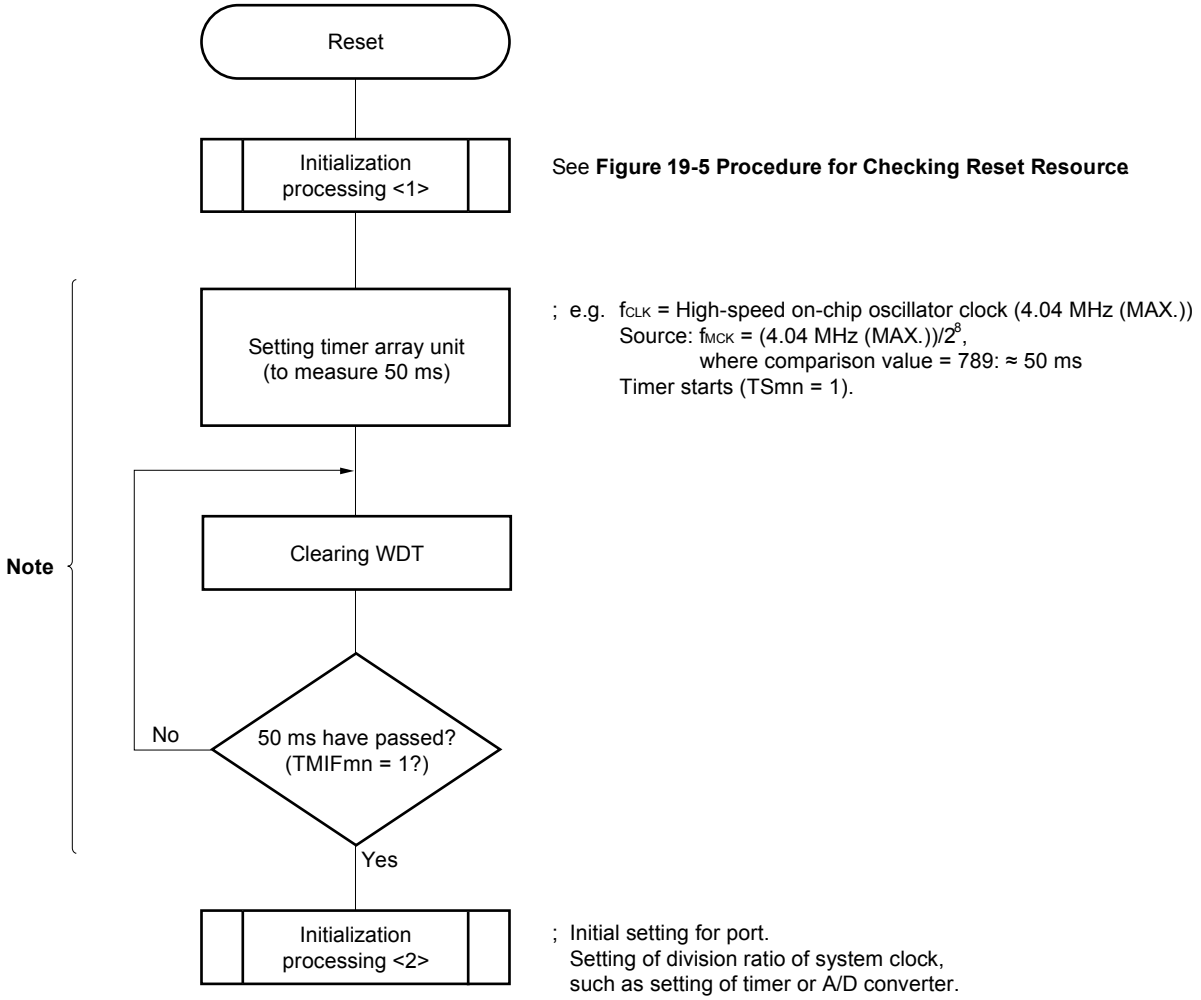

Note If reset is generated again during this period, initialization processing <2> is not started.

Remark m = 0, 1
n = 0 to 7

(2) Delay from the time LVD reset source is generated until the time LVD reset has been generated or released

There is some delay from the time supply voltage (V_{DD}) < LVD detection voltage (V_{LVD}) until the time LVD reset has been generated.

In the same way, there is also some delay from the time LVD detection voltage (V_{LVD}) ≤ supply voltage (V_{DD}) until the time LVD reset has been released (see **Figure 22-11**).

Figure 22-11. Delay from the time LVD reset source is generated until the time LVD reset has been generated or released

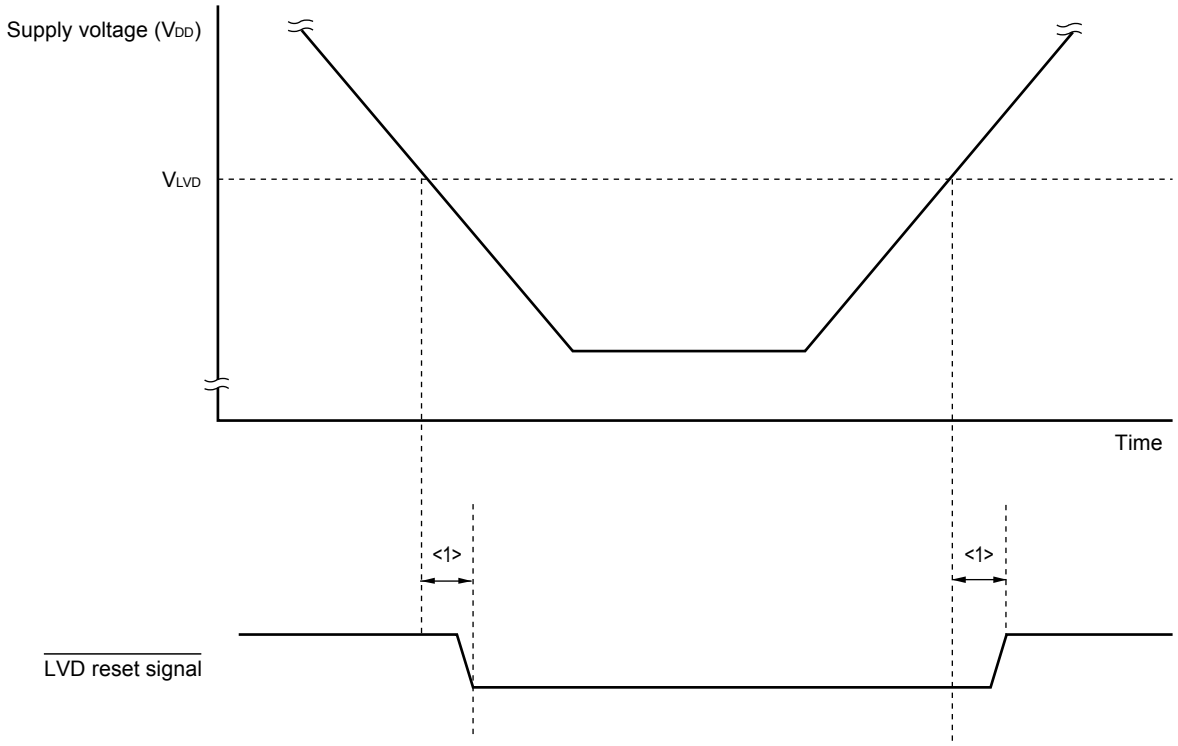

<1>: Detection delay (300 μs (MAX.))

(3) Power on when LVD is off

Use the external rest input via the $\overline{\text{RESET}}$ pin when the LVD is off.

For an external reset, input a low level for 10 **μ**s or more to the $\overline{\text{RESET}}$ pin. To perform an external reset upon power application, input a low level to the $\overline{\text{RESET}}$ pin, turn power on, continue to input a low level to the pin for 10 **μ**s or more within the operating voltage range shown in **30.6 AC Characteristics**, and then input a high level to the pin.

(4) Operating voltage fall when LVD is off or LVD interrupt mode is selected

When the operating voltage falls with the LVD is off or with the LVD interrupt mode is selected, this LSI should be placed in the STOP mode, or placed in the reset state by controlling the externally input reset signal, before the voltage falls below the operating voltage range defined in **30.6 AC characteristics**. When restarting the operation, make sure that the operation voltage has returned within the range of operation.

CHAPTER 23 SAFETY FUNCTIONS

23.1 Overview of Safety Functions

The following safety functions are provided in the RL78/G1D to comply with the IEC60730 and IEC61508 safety standards.

These functions enable the microcontroller to self-diagnose abnormalities and stop operating if an abnormality is detected.

(1) Flash memory CRC operation function (high-speed CRC, general-purpose CRC)

This detects data errors in the flash memory by performing CRC operations.

Two CRC functions are provided in the RL78/G1D that can be used according to the application or purpose of use.

- High-speed CRC: The CPU can be stopped and a high-speed check executed on its entire code flash memory area during the initialization routine.
- General CRC: This can be used for checking various data in addition to the code flash memory area while the CPU is running.

(2) RAM parity error detection function

This detects parity errors when reading RAM data.

(3) RAM guard function

This prevents RAM data from being rewritten when the CPU freezes.

(4) SFR guard function

This prevents SFRs from being rewritten when the CPU freezes.

(5) Invalid memory access detection function

This detects illegal accesses to invalid memory areas (such as areas where no memory is allocated and areas to which access is restricted).

(6) Frequency detection function

This function allows a self-check of the CPU/peripheral hardware clock frequencies using the timer array unit.

(7) A/D test function

This is used to perform a self-check of the A/D converter by performing A/D conversion of the A/D converter's positive and negative reference voltages, analog input channel (ANI), temperature sensor output voltage, and internal reference voltage.

Remark For usage examples of the safety functions complying with the IEC60730 safety standards, refer to the **RL78 MCU series IEC60730/60335 application notes (R01AN1062, R01AN1296)**.

23.2 Registers Used by Safety Functions

The safety functions use the following registers for each function.

Register	Each Function of Safety Function
● Flash memory CRC control register (CRC0CTL) ● Flash memory CRC operation result register (PGCRCL)	Flash memory CRC operation function (high-speed CRC)
● CRC input register (CRCIN) ● CRC data register (CRCD)	CRC operation function (general-purpose CRC)
● RAM parity error control register (RPECTL)	RAM parity error detection function
● Invalid memory access detection control register (IAWCTL)	RAM guard function
	SFR guard function
	Invalid memory access detection function
● Timer input select register 0 (TIS0)	Frequency detection function
● A/D test register (ADTES)	A/D test function

The content of each register is described in **23.3 Operation of Safety Functions**.

23.3 Operation of Safety Functions

23.3.1 Flash memory CRC operation function (high-speed CRC)

The IEC60730 standard mandates the checking of data in the flash memory, and recommends using CRC to do it. The high-speed CRC provided in the RL78/G1D can be used to check the entire code flash memory area during the initialization routine. The high-speed CRC can be executed only when the program is allocated on the RAM and in the HALT mode of the main system clock.

The high-speed CRC performs an operation by reading 32-bit data per clock from the flash memory while stopping the CPU.This function therefore can finish a check in a shorter time (for example, 1024 μs@32 MHz with 128-KB flash memory).

The CRC generator polynomial used complies with “$X^{16} + X^{12} + X^5 + 1$” of CRC-16-CCITT.

The high-speed CRC operates in MSB first order from bit 31 to bit 0.

Caution **The CRC operation result might differ during on-chip debugging because the monitor program is allocated.**

Remark The operation result is different between the high-speed CRC and the general CRC, because the general CRC operates in LSB first order.

23.3.1.1 Flash memory CRC control register (CRC0CTL)

This register is used to control the operation of the high-speed CRC ALU, as well as to specify the operation range.

The CRC0CTL register can be set by a 1-bit or 8-bit memory manipulation instruction.

Reset signal generation clears this register to 00H.

Figure 23-1. Format of Flash Memory CRC Control Register (CRC0CTL)

Address: F02F0H After reset: 00H R/W

Symbol	<7>	6	5	4	3	2	1	0
CRC0CTL	CRC0EN	0	FEA5	FEA4	FEA3	FEA2	FEA1	FEA0

CRC0EN	Control of CRC ALU operation
0	Stop the operation.
1	Start the operation according to HALT instruction execution.

FEA5	FEA4	FEA3	FEA2	FEA1	FEA0	High-speed CRC operation range
0	0	0	0	0	0	00000H to 03FFBH (16 Kbytes - 4 bytes)
0	0	0	0	0	1	00000H to 07FFBH (32 Kbytes - 4 bytes)
0	0	0	0	1	0	00000H to 0BFFBH (48 Kbytes - 4 bytes)
0	0	0	0	1	1	00000H to 0FFFBH (64 Kbytes - 4 bytes)
0	0	0	1	0	0	00000H to 13FFBH (80 Kbytes - 4 bytes)
0	0	0	1	0	1	00000H to 17FFBH (96 Kbytes - 4 bytes)
0	0	0	1	1	0	00000H to 1BFFBH (112 Kbytes - 4 bytes)
0	0	0	1	1	1	00000H to 1FFFBH (128 Kbytes - 4 bytes)
0	0	1	0	0	0	00000H to 23FFBH (144 Kbytes - 4 bytes)
0	0	1	0	0	1	00000H to 27FFBH (160 Kbytes - 4 bytes)
0	0	1	0	1	0	00000H to 2BFFBH (176 Kbytes - 4 bytes)
0	0	1	0	1	1	00000H to 2FFFBH (192 Kbytes - 4 bytes)
0	0	1	1	0	0	00000H to 33FFBH (208 Kbytes - 4 bytes)
0	0	1	1	0	1	00000H to 37FFBH (224 Kbytes - 4 bytes)
0	0	1	1	1	0	00000H to 3BFFBH (240 Kbytes - 4 bytes)
0	0	1	1	1	1	00000H to 3FFFBH (256 Kbytes - 4 bytes)
Other than above						Setting prohibited

Remark Input the expected CRC operation result value to be used for comparison in the lowest 4 bytes of the flash memory. Note that the operation range will thereby be reduced by 4 bytes.

23.3.1.2 Flash memory CRC operation result register (PGCRCL)

This register is used to store the high-speed CRC operation results.

The PGCRCL register can be set by a 16-bit memory manipulation instruction.

Reset signal generation clears this register to 0000H.

Figure 23-2. Format of Flash Memory CRC Operation Result Register (PGCRCL)

Address: F02F2H After reset: 0000H R/W

Symbol	15	14	13	12	11	10	9	8
PGCRCL	PGCRC15	PGCRC14	PGCRC13	PGCRC12	PGCRC11	PGCRC10	PGCRC9	PGCRC8
	7	6	5	4	3	2	1	0
	PGCRC7	PGCRC6	PGCRC5	PGCRC4	PGCRC3	PGCRC2	PGCRC1	PGCRC0

PGCRC15 to PGCRC0	High-speed CRC operation results
0000H to FFFFH	Store the high-speed CRC operation results.

Caution The PGCRCL register can only be written if CRC0EN (bit 7 of the CRC0CTL register) = 1.

Figure 23-3 shows the flowchart of flash memory CRC operation function (high-speed CRC).

<Operation flow>

<R> **Figure 23-3. Flowchart of Flash Memory CRC Operation Function (High-speed CRC)**

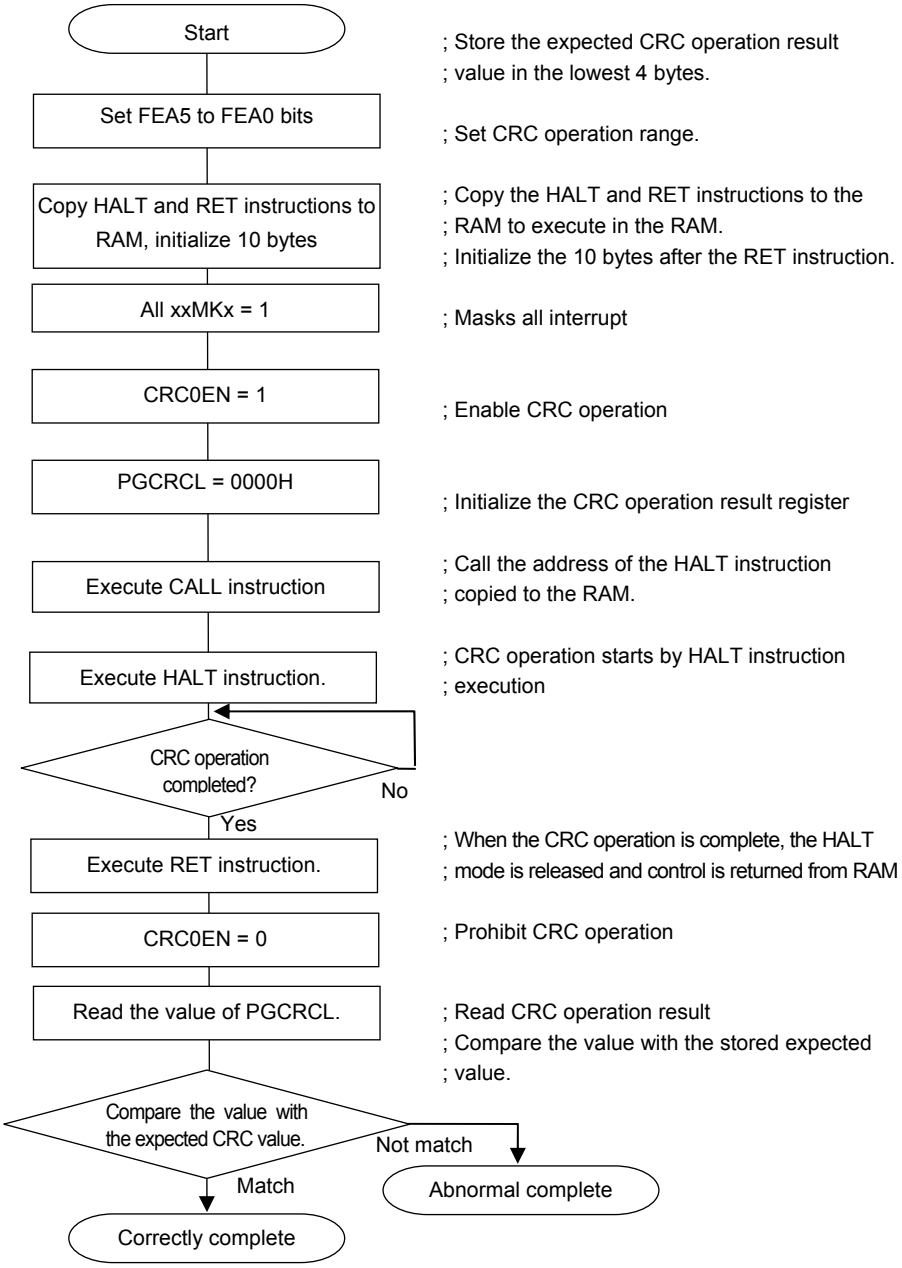

Cautions 1. The CRC operation is executed only on the code flash.

2. Store the expected CRC operation value in the area below the operation range in the code flash.

3. The CRC operation is enabled by executing the HALT instruction in the RAM area. Be sure to execute the HALT instruction in RAM area.

The expected CRC value can be calculated by using the Integrated Development Environment CubeSuite+. See the **Integrated Development Environment CubeSuite+ user's manual** for details.

23.3.2 CRC operation function (general-purpose CRC)

In order to guarantee safety during operation, the IEC61508 standard mandates the checking of data even while the CPU is operating.

In the RL78/G1D, a general CRC operation can be executed as a peripheral function while the CPU is operating. The general CRC can be used for checking various data in addition to the code flash memory area. The data to be checked can be specified by using software (a user-created program). CRC calculation function in the HALT mode can be used only during the DMA transmission.

The general CRC operation can be executed in the main system clock operation mode as well as the subsystem clock operation mode.

The CRC generator polynomial used is "$X^{16} + X^{12} + X^5 + 1$" of CRC-16-CCITT. The data to be input is inverted in bit order and then calculated to allow for LSB-first communication. For example, if the data 12345678H is sent from the LSB, values are written to the CRCIN register in the order of 78H, 56H, 34H, and 12H, enabling a value of 08F6H to be obtained from the CRCD register. This is the result obtained by executing a CRC operation on the bit rows shown below, which consist of the data 12345678H inverted in bit order.

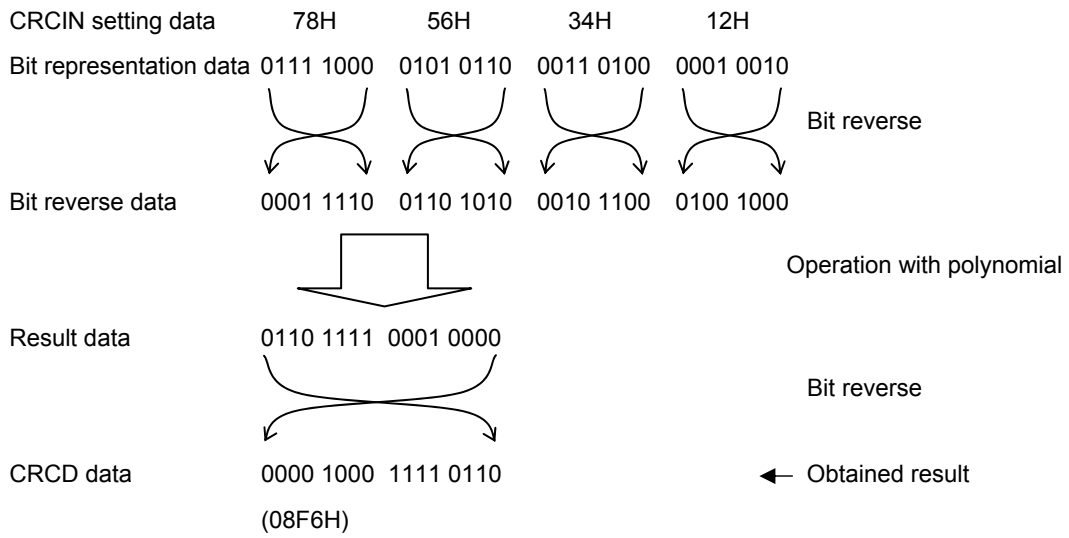

Caution Because the debugger rewrites the software break setting line to a break instruction during program execution, the CRC operation result differs if a software break is set in the CRC operation target area.

23.3.2.1 CRC input register (CRCIN)

CRCIN register is an 8-bit register that is used to set the CRC operation data of general-purpose CRC.

The possible setting range is 00H to FFH.

The CRCIN register can be set by an 8-bit memory manipulation instruction.

Reset signal generation clears this register to 00H.

Figure 23-4. Format of CRC Input Register (CRCIN)

Address: FFFACH After reset: 00H R/W

Symbol	7	6	5	4	3	2	1	0
CRCIN								

Bits 7 to 0	Function
00H to FFH	Data input.

23.3.2.2 CRC data register (CRCD)

This register is used to store the CRC operation result of the general-purpose CRC.

The setting range is 0000H to FFFFH.

After 1 clock of CPU/peripheral hardware clock (f_{CLK}) has elapsed from the time CRCIN register is written, the CRC operation result is stored to the CRCD register.

The CRCD register can be set by a 16-bit memory manipulation instruction.

Reset signal generation clears this register to 0000H.

Figure 23-5. Format of CRC Data Register (CRCD)

Address: F02FAH After reset: 0000H R/W

Symbol	15	14	13	12	11	10	9	8	7	6	5	4	3	2	1	0
CRCD																

Cautions 1. Read the value written to CRCD register before writing to CRCIN register.

2. If conflict between writing and storing operation result to CRCD register occurs, the writing is ignored.

<Operation flow>

Figure 23-6. CRC Operation Function (General-Purpose CRC)

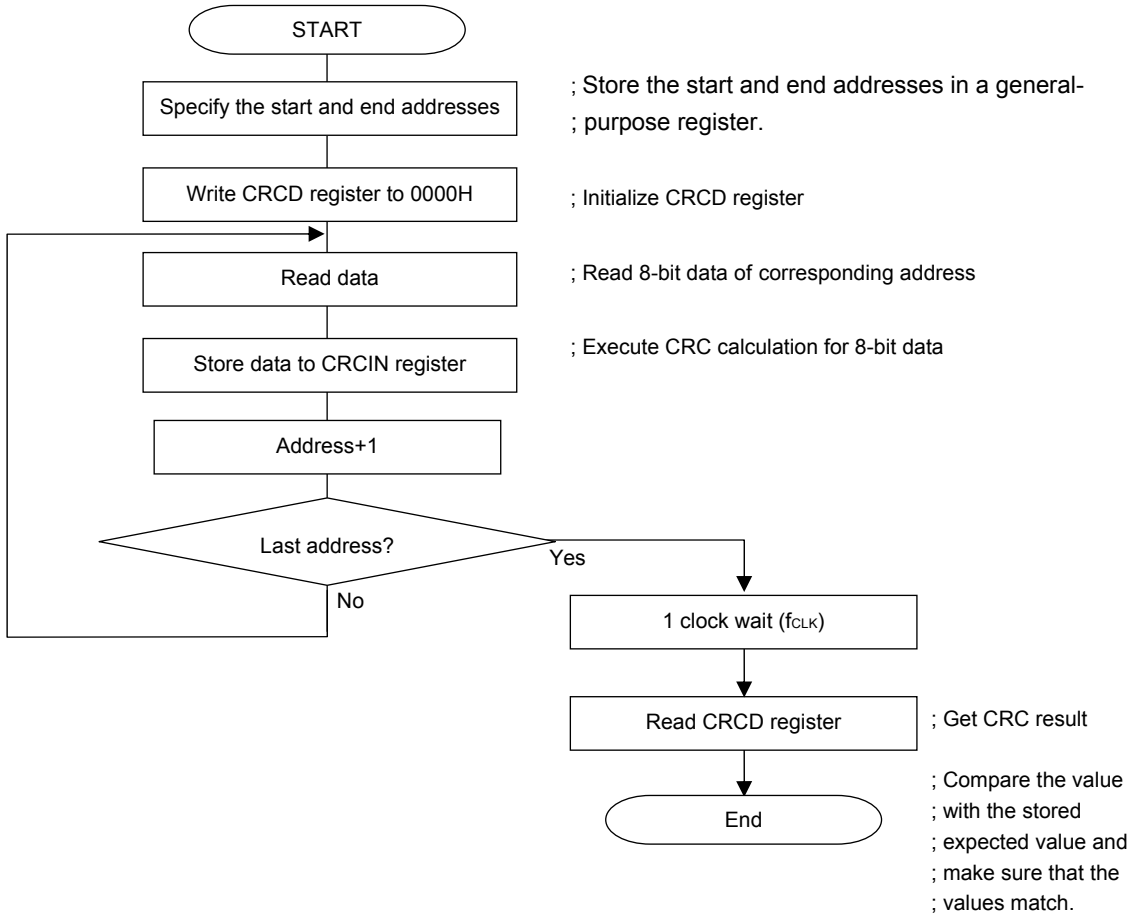

23.3.3 RAM parity error detection function

The IEC60730 standard mandates the checking of RAM data. A single-bit parity bit is therefore added to all 8-bit data in the RL78/G1D's RAM. By using this RAM parity error detection function, the parity bit is appended when data is written, and the parity is checked when the data is read. This function can also be used to trigger a reset when a parity error occurs.

<Control register>

23.3.3.1 RAM parity error control register (RPECTL)

This register is used to control parity error generation check bit and reset generation due to parity errors.

The RPECTL register can be set by a 1-bit or 8-bit memory manipulation instruction.

Reset signal generation clears this register to 00H.

Figure 23-7. Format of RAM Parity Error Control Register (RPECTL)

Address: F00F5H After reset: 00H R/W

Symbol	<7>	6	5	4	3	2	1	<0>
RPECTL	RPERDIS	0	0	0	0	0	0	RPEF

RPERDIS	Parity error reset mask flag
0	Enable parity error resets.
1	Disable parity error resets.

RPEF	Parity error status flag
0	No parity error has occurred.
1	A parity error has occurred.

Caution The parity bit is appended when data is written, and the parity is checked when the data is read. Therefore, while RAM parity error resets are enabled (RPERDIS = 0), be sure to initialize RAM areas where data access is to proceed before reading data.
The RL78's CPU executes look-ahead due to the pipeline operation, the CPU might read an uninitialized RAM area that is allocated beyond the RAM used, which causes a RAM parity error. Therefore, while RAM parity error resets are enabled (RPERDIS = 0), be sure to initialize the RAM area + 10 bytes when instructions are fetched from RAM areas. When using the self-programming function while RAM parity error resets are enabled (RPERDIS = 0), be sure to initialize the RAM area to overwrite + 10 bytes before overwriting.

Remarks 1. The parity error reset is enabled by default (RPERDIS = 0).
2. Even if the parity error reset is disabled (RPERDIS = 1), the RPEF flag will be set (1) if a parity error occurs. If parity error resets are enabled (RPERDIS = 0) with RPEF set to 1, a parity error reset is generated when the RPERDIS bit is cleared to 0.
3. The RPEF flag in the RPECTL register is set (1) when the RAM parity error occurs and cleared (0) by writing 0 to it or by any reset source. When RPEF = 1, the value is retained even if RAM for which no parity error has occurred is read.
4. The general registers are not included for RAM parity error detection.

Figure 23-8. Flowchart of RAM Parity Check

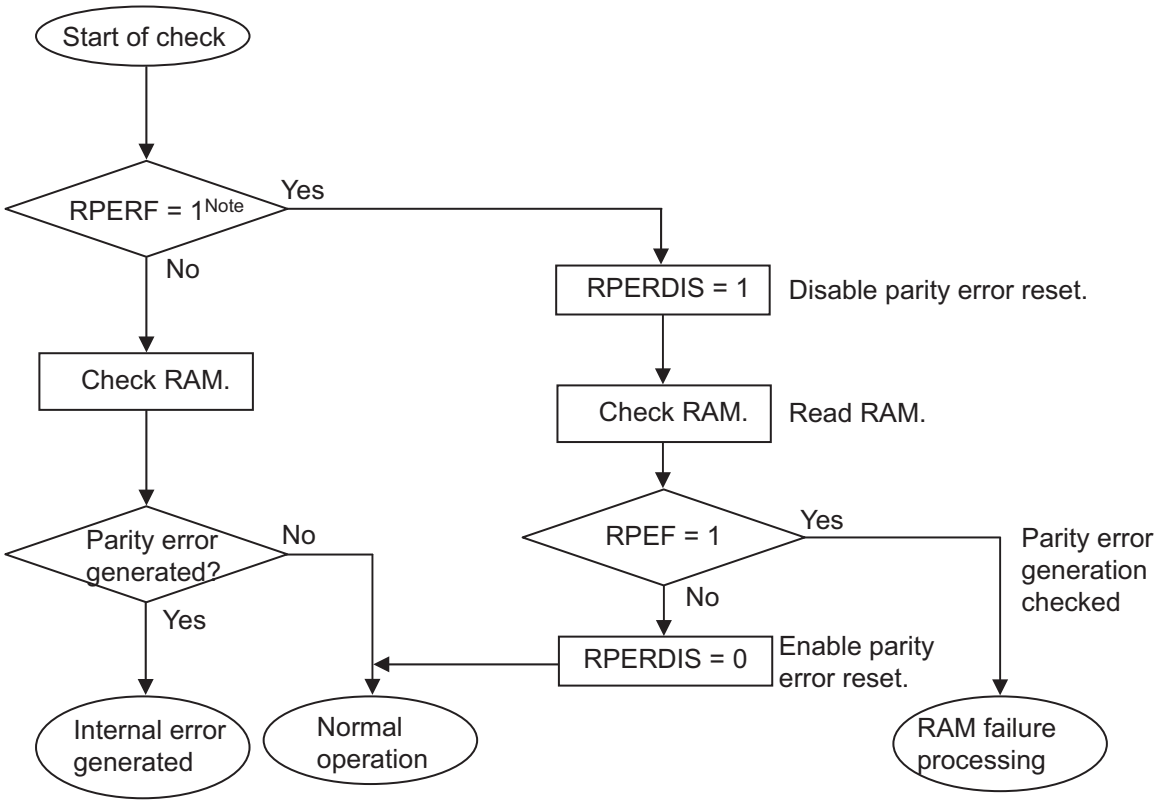

Note To check internal reset status using a RAM parity error, see **CHAPTER 20 RESET FUNCTION**.

23.3.4 RAM guard function

In order to guarantee safety during operation, the IEC61508 standard mandates that important data stored in the RAM be protected, even if the CPU freezes.

This RAM guard function is used to protect data in the specified memory space.

If the RAM guard function is specified, writing to the specified RAM space is disabled, but reading from the space can be carried out as usual.

23.3.4.1 Invalid memory access detection control register (IAWCTL)

This register is used to control the detection of invalid memory access and RAM/SFR guard function.

GRAM1 and GRAM0 bits are used in RAM guard function.

The IAWCTL register can be set by an 8-bit memory manipulation instruction.

Reset signal generation clears this register to 00H.

Figure 23-9. Format of Invalid Memory Access Detection Control Register (IAWCTL)

Address: F0078H After reset: 00H R/W

Symbol	7	6	5	4	3	2	1	0
IAWCTL	IAWEN	0	GRAM1	GRAM0	0	GPORT	GINT	GCSC

GRAM1	GRAM0	RAM guard space[Note]
0	0	Disabled. RAM can be written to.
0	1	The 128 bytes of space starting at the start address in the RAM
1	0	The 256 bytes of space starting at the start address in the RAM
1	1	The 512 bytes of space starting at the start address in the RAM

Note The RAM start address differs depending on the size of the RAM provided with the product.

23.3.5 SFR guard function

In order to guarantee safety during operation, the IEC61508 standard mandates that important SFRs be protected from being overwritten, even if the CPU freezes.

This SFR guard function is used to protect data in the control registers used by the port function, interrupt function, clock control function, voltage detection function, and RAM parity error detection function.

If the SFR guard function is specified, writing to the specified SFRs is disabled, but reading from the SFRs can be carried out as usual.

23.3.5.1 Invalid memory access detection control register (IAWCTL)

This register is used to control the detection of invalid memory access and RAM/SFR guard function.

GPORT, GINT and GCSC bits are used in SFR guard function.

The IAWCTL register can be set by an 8-bit memory manipulation instruction.

Reset signal generation clears this register to 00H.

Figure 23-10. Format of Invalid Memory Access Detection Control Register (IAWCTL)

Address: F0078H After reset: 00H R/W

Symbol	7	6	5	4	3	2	1	0
IAWCTL	IAWEN	0	GRAM1	GRAM0	0	GPORT	GINT	GCSC

GPORT	Control registers of port function guard
0	Disabled. Control registers of port function can be read or written to.
1	Enabled. Writing to control registers of port function is disabled. Reading is enabled. [Guarded SFR] PMxx, PUxx, PIMxx, POMxx, PMCxx, ADPC, PIOR Note

GINT	Registers of interrupt function guard
0	Disabled. Registers of interrupt function can be read or written to.
1	Enabled. Writing to registers of interrupt function is disabled. Reading is enabled. [Guarded SFR] IFxx, MKxx, PRxx, EGPx, EGNx

GCSC	Control registers of clock control function, voltage detector and RAM parity error detection function guard
0	Disabled. Control registers of clock control function, voltage detector and RAM parity error detection function can be read or written to.
1	Enabled. Writing to control registers of clock control function, voltage detector and RAM parity error detection function is disabled. Reading is enabled. [Guarded SFR] CMC, CSC, OSTS, CKC, PERx, OSMC, LVIM, LVIS, RPECTL

Note Pxx (Port register) is not guarded.

23.3.6 Invalid memory access detection function

The IEC60730 standard mandates checking that the CPU and interrupts are operating correctly.

The illegal memory access detection function triggers a reset if a memory space specified as access-prohibited is accessed.

The illegal memory access detection function applies to the areas indicated by NG in Figure 23-11.

Figure 23-11. Invalid Access Detection Area

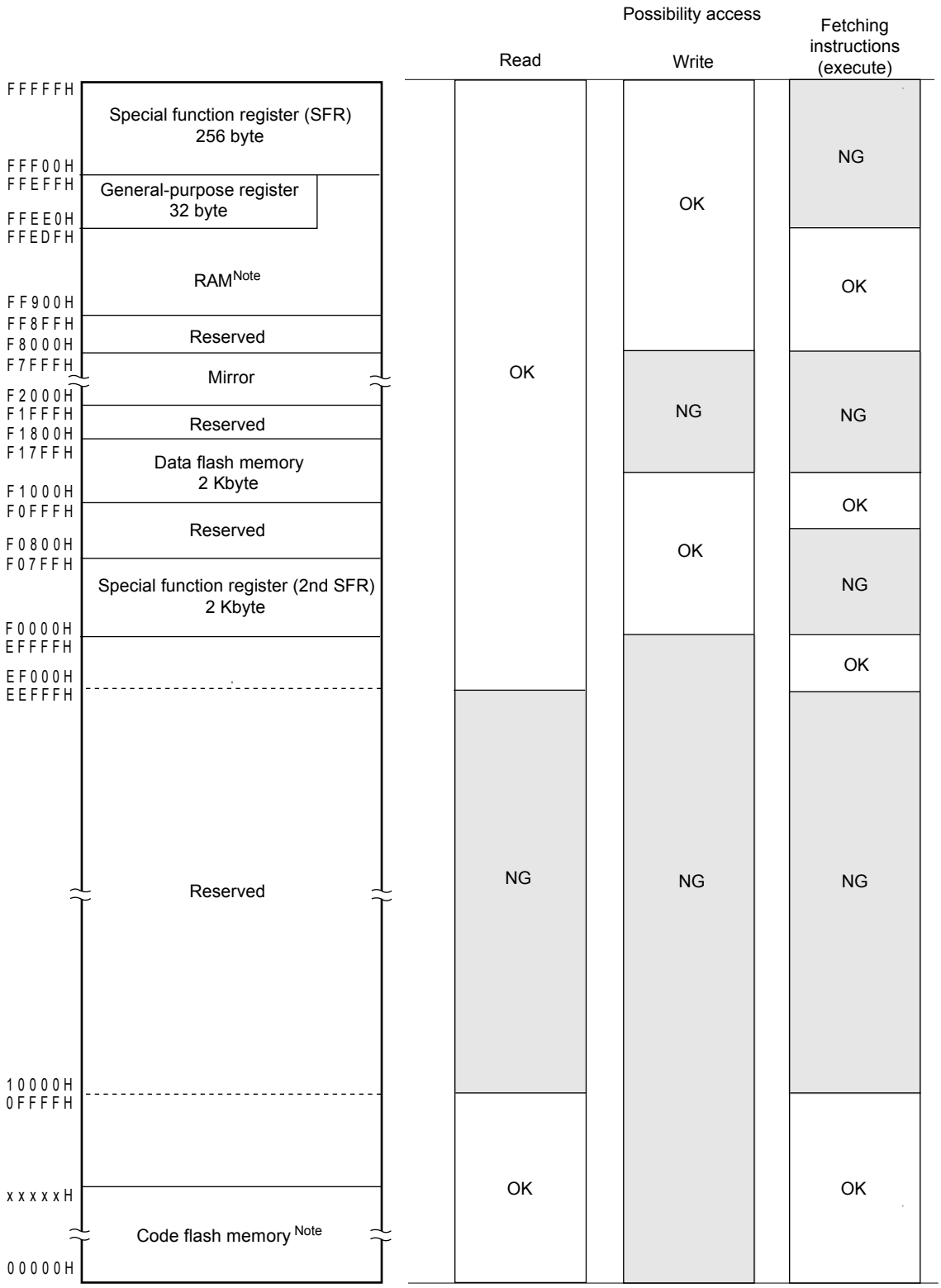

Note The following table lists the code flash memory, RAM, and lowest detection address for each product:

Products	Code flash memory (00000H to xxxxxH)	RAM (zzzzzH to FFEFFH)	Detected lowest address for read/instruction fetch (execution) (yyyyyH)
R5F11AGG	131072 × 8 bit (00000H to 1FFFFH)	12288 × 8 bit (FCF00H to FFEFFH)	20000H
R5F11AGH	196608 × 8 bit (00000H to 2FFFFH)	16384 × 8 bit (FBF00H to FFEFFH)	30000H
R5F11AGJ	262144 × 8 bit (00000H to 3FFFFH)	20480 × 8 bit (FAF00H to FFEFFH)	40000H

23.3.6.1 Invalid memory access detection control register (IAWCTL)

This register is used to control the detection of invalid memory access and RAM/SFR guard function.

IAWEN bit is used in invalid memory access detection function.

The IAWCTL register can be set by an 8-bit memory manipulation instruction.

Reset signal generation clears this register to 00H.

Figure 23-12. Format of Invalid Memory Access Detection Control Register (IAWCTL)

Address: F0078H After reset: 00H R/W

Symbol	7	6	5	4	3	2	1	0
IAWCTL	IAWEN	0	GRAM1	GRAM0	0	GPORT	GINT	GCSC

IAWEN[Note]	Control of invalid memory access detection
0	Disable the detection of invalid memory access.
1	Enable the detection of invalid memory access.

Note Only writing 1 to the IAWEN bit is enabled, not writing 0 to it after setting it to 1.

Remark By specifying WDTON = 1 (watchdog timer operation enable) for the option byte (000C0H), the invalid memory access function is enabled even IAWEN = 0.

23.3.7 Frequency detection function

The IEC60730 standard mandates checking that the oscillation frequency is correct.

By using the CPU/peripheral hardware clock frequency (f_{CLK}) and measuring the pulse width of the input signal to channel 5 of the timer array unit 0 (TAU0), whether the proportional relationship between the two clock frequencies is correct can be determined. Note that, however, if one or both clock operations are completely stopped, the proportional relationship between the clocks cannot be determined.

<Clocks to be compared>

<1> CPU/peripheral hardware clock frequency (f_{CLK}):

- High-speed on-chip oscillator clock (f_{IH})
- High-speed system clock (f_{MX})

<2> Input to channel 5 of the timer array unit

- Timer input to channel 5 (TI05)
- Low-speed on-chip oscillator clock (f_{IL}: 15 kHz (typ.))
- Subsystem clock (f_{SUB})**Note**

Figure 23-13. Configuration of Frequency Detection Function

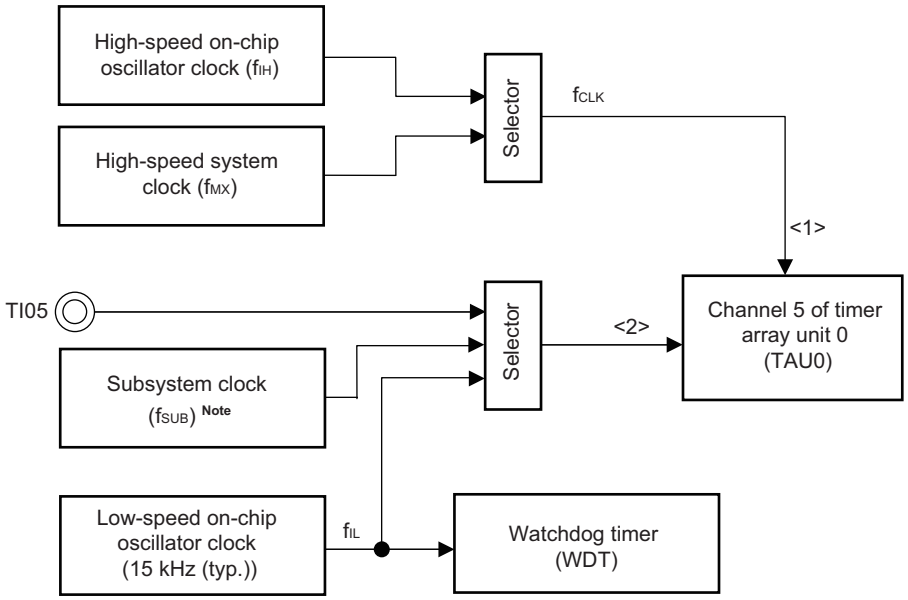

If input pulse interval measurement results in an abnormal value, it can be concluded that the clock frequency is abnormal.

For how to execute input pulse interval measurement, see **7.8.4 Operation as input pulse interval measurement**.

Note Selectable when an external crystal resonator (32.768 kHz) is connected to XT1 and XT2 pins for sub-system clock.

23.3.7.1 Timer input select register 0 (TIS0)

The TIS0 register is used to select the timer input of channel 5 of the timer array unit 0 (TAU0).

The TIS0 register can be set by an 8-bit memory manipulation instruction.

Reset signal generation clears this register to 00H.

Figure 23-14. Format of Timer Input Select Register 0 (TIS0)

Address: F0074H After reset: 00H R/W

Symbol	7	6	5	4	3	2	1	0
TIS0	0	0	0	0	0	TIS02	TIS01	TIS00

TIS02	TIS01	TIS00	Selection of timer input used with channel 5
0	0	0	Input signal of timer input pin (TI05)
0	0	1	
0	1	0	
0	1	1	
1	0	0	Low-speed on-chip oscillator clock (f_{IL})
1	0	1	Subsystem clock (f_{SUB})
Other than above			Setting prohibited

23.3.8 A/D test function

The IEC60730 standard mandates testing the A/D converter. The A/D test function checks whether or not the A/D converter is operating normally by executing A/D conversions of the A/D converter's positive and negative reference voltages, analog input channel (ANI), temperature sensor output voltage, and the internal reference voltage. For details of the check method, see the safety function (A/D test) application note (R01AN0955).

The analog multiplexer can be checked using the following procedure.

<1> Select the ANIx pin for A/D conversion using the ADTES register (ADTES1 = 0, ADTES0 = 0).
<2> Perform A/D conversion for the ANIx pin (conversion result 1-1).
<3> Select the A/D converter's negative reference voltage for A/D conversion using the ADTES register (ADTES1 = 1, ADTES0 = 0)
<4> Perform A/D conversion of the negative reference voltage of the A/D converter (conversion result 2-1).
<5> Select the ANIx pin for A/D conversion using the ADTES register (ADTES1 = 0, ADTES0 = 0).
<6> Perform A/D conversion for the ANIx pin (conversion result 1-2).
<7> Select the A/D converter's positive reference voltage for A/D conversion using the ADTES register (ADTES1 = 1, ADTES0 = 1)
<8> Perform A/D conversion of the positive reference voltage of the A/D converter (conversion result 2-2).
<9> Select the ANIx pin for A/D conversion using the ADTES register (ADTES1 = 0, ADTES0 = 0).
<10> Perform A/D conversion for the ANIx pin (conversion result 1-3).
<11> Check that the conversion results 1-1, 1-2, and 1-3 are equal.
<12> Check that the A/D conversion result 2-1 is all zero and conversion result 2-2 is all one.

Using the procedure above can confirm that the analog multiplexer is selected and all wiring is connected.

Remarks 1. If the analog input voltage is variable during A/D conversion in steps <1> to <10> above, use another method to check the analog multiplexer.

2. The conversion results might contain an error. Consider an appropriate level of error when comparing the conversion results.

Figure 23-15. Configuration of A/D Test Function

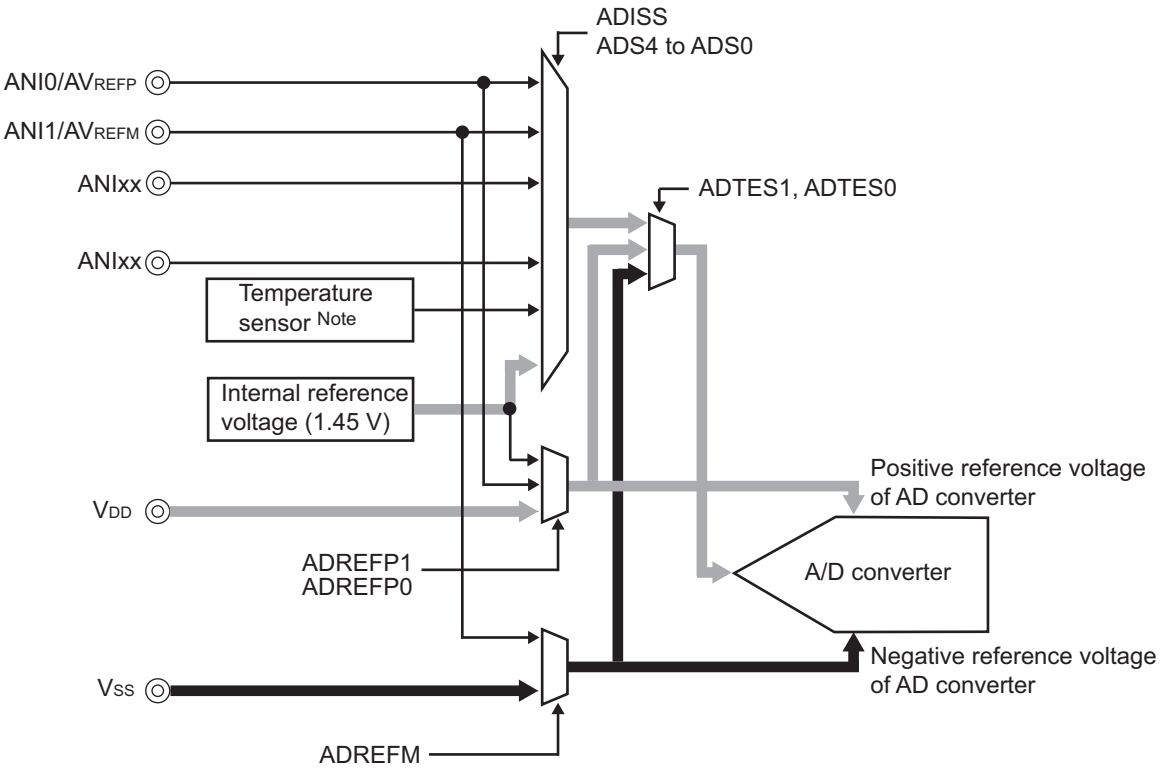

Note This setting can be used only in HS (high-speed main) mode.

23.3.8.1 A/D test register (ADTES)

This register is used to select the A/D converter's positive reference voltage, A/D converter's negative reference voltage, analog input channel (ANIxx), temperature sensor output voltage, or internal reference voltage (1.45 V) as the target of A/D conversion.

When using the A/D test function, specify the following settings:

- Select negative reference voltage as the target of A/D conversion for zero-scale measurement.
- Select positive reference voltage as the target of A/D conversion for full-scale measurement.

The ADTES register can be set by an 8-bit memory manipulation instruction.

Reset signal generation clears this register to 00H.

Figure 23-16. Format of A/D Test Register (ADTES)

Address: F0013H After reset: 00H R/W

Symbol	7	6	5	4	3	2	1	0
ADTES	0	0	0	0	0	0	ADTES1	ADTES0

ADTES1	ADTES0	A/D conversion target
0	0	ANIxx/temperature sensor output voltage[Note]/internal reference voltage (1.45 V)[Note] (This is specified using the analog input channel specification register (ADS).)
1	0	Negative reference voltage (selected with the ADREFM bit in ADM2)
1	1	Positive reference voltage (selected with the ADREFP1 or ADREFP0 bit in ADM2)
Other than above		Setting prohibited

Note Temperature sensor output voltage and internal reference voltage (1.45 V) can be used only in HS (high-speed main) mode.

23.3.8.2 Analog input channel specification register (ADS)

This register specifies the input channel of the analog voltage to be A/D converted.

Set A/D test register (ADTES) to 00H when measuring the ANIxx/temperature sensor output voltage/internal reference voltage (1.45 V).

The ADS register can be set by a 1-bit or 8-bit memory manipulation instruction.

Reset signal generation clears this register to 00H.

Figure 23-17. Format of Analog Input Channel Specification Register (ADS)

Address: FFF31H After reset: 00H R/W

Symbol	7	6	5	4	3	2	1	0
ADS	ADISS	0	0	ADS4	ADS3	ADS2	ADS1	ADS0

○ Select mode (ADMD = 0)

ADISS	ADS4	ADS3	ADS2	ADS1	ADS0	Analog input channel	Input source
0	0	0	0	0	0	ANI0	P20/ANI0/AV_{REFP} pin
0	0	0	0	0	1	ANI1	P21/ANI1/AV_{REFM} pin
0	0	0	0	1	0	ANI2	P22/ANI2 pin
0	0	0	0	1	1	ANI3	P23/ANI3 pin
0	1	0	0	0	0	ANI16	P03/ANI16 pin
0	1	0	0	0	1	ANI17	P02/ANI17 pin
0	1	0	0	1	0	ANI18	P147/ANI18 pin
0	1	0	0	1	1	ANI19	P120/ANI19 pin
1	0	0	0	0	0	–	Temperature sensor output voltage[Note]
1	0	0	0	0	1	–	Internal reference voltage output (1.45 V)[Note]
Other than above						Setting prohibited	

Note This setting can be used only in HS (high-speed main) mode.

Cautions
1. **Be sure to clear bits 5 and 6 to 0.**
2. **Select input mode for the ports which are set to analog input with the ADPC and PMC registers, using the port mode registers 0, 2, 12, and 14 (PM0, PM2, PM12, and PM14).**
3. **Do not use the ADS register to set the pins which should be set as digital I/O with the A/D port configuration register (ADPC).**
4. **Do not use the ADS register to set the pins which should be set as digital I/O with the port mode control register 0 (PMC0).**
5. **Only rewrite the value of the ADISS bit while conversion operation is stopped (ADCS = 0, ADCE = 0).**
6. **If using AV_{REFP} as the positive reference voltage source of the A/D converter, do not select ANI0 as an A/D conversion channel.**
7. **If using AV_{REFM} as the negative reference voltage source of the A/D converter, do not select ANI1 as an A/D conversion channel.**
8. **When ADISS is 1, the internal reference voltage (1.45 V) cannot be used for the positive reference voltage. In addition, the first conversion result obtained after setting ADISS to 1 is not available. For detailed setting flow, see 12.7.4 Setup when temperature sensor output voltage/internal reference voltage is selected (example for software trigger mode and one-shot conversion mode).**
9. **If a transition is made to STOP mode or a transition is made to HALT mode during CPU operation with subsystem clock, do not set ADISS to 1. When ADISS is 1, the A/D converter reference voltage current (I_{ADREF}) shown in 30.5.1 Supply current characteristics is added.**

CHAPTER 24 REGULATOR

24.1 Regulator Overview

The RL78/G1D contains a circuit for operating the device with a constant voltage. At this time, in order to stabilize the regulator output voltage, connect the REGC pin to V_{SS} via a capacitor (0.47 to 1 μF). Also, use a capacitor with good characteristics, since it is used to stabilize internal voltage.

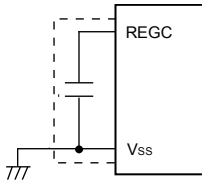

Caution Keep the wiring length as short as possible for the broken-line part in the above figure.

The regulator output voltage, see **Table 24-1**.

Table 24-1. Regulator Output Voltage Conditions

Mode	Output Voltage	Condition
LV (low voltage main) mode	1.8 V	–
LS (low-speed main) mode		
HS (high-speed main) mode	1.8 V	In STOP mode
		When both the high-speed system clock (f_{MX}) and the high-speed on-chip oscillator clock (f_{IH}) are stopped during CPU operation with the subsystem clock (f_{SUB})
		When both the high-speed system clock (f_{MX}) and the high-speed on-chip oscillator clock (f_{IH}) are stopped during the HALT mode when the CPU operation with the subsystem clock (f_{SUB}) has been set
	2.1 V	Other than above (include during OCD mode)[Note]

Note When it shifts to the subsystem clock operation or STOP mode during the on-chip debugging, the regulator output voltage is kept at 2.1 V (not decline to 1.8 V).

CHAPTER 25 OPTION BYTE

25.1 Functions of Option Bytes

Addresses 000C0H to 000C3H of the flash memory of the RL78/G1D form an option byte area.

Option bytes consist of user option byte (000C0H to 000C2H) and on-chip debug option byte (000C3H).

Upon power application or resetting and starting, an option byte is automatically referenced and a specified function is set. When using the product, be sure to set the following functions by using the option bytes.

For the bits to which no function is allocated, do not change their initial values.

To use the boot swap operation during self programming, 000C0H to 000C3H are replaced by 010C0H to 010C3H. Therefore, set the same values as 000C0H to 000C3H to 010C0H to 010C3H.

Caution The option bytes should always be set regardless of whether each function is used.

25.1.1 User option byte (000C0H to 000C2H/010C0H to 010C2H)

(1) 000C0H/010C0H

○ Setting of watchdog timer operation
- Enabling or disabling of counter operation
- Enabling or disabling of counter operation in the HALT or STOP mode

○ Setting of interval time of watchdog timer

○ Setting of window open period of watchdog timer

○ Setting of interval interrupt of watchdog timer
- Whether or not to use the interval interrupt is selectable.

Caution Set the same value as 000C0H to 010C0H when the boot swap operation is used because 000C0H is replaced by 010C0H.

(2) 000C1H/010C1H

○ Setting of LVD operation mode
- Interrupt & reset mode.
- Reset mode.
- Interrupt mode.
- LVD off (by controlling the externally input reset signal on the $\overline{\text{RESET}}$ pin)

○ Setting of LVD detection level (V_{LVDH}, V_{LVDL}, V_{LVD})

Cautions 1. After power is supplied, the reset state must be retained until the operating voltage becomes in the range defined in 30.6 AC Characteristics. This is done by utilizing the voltage detection circuit or controlling the externally input reset signal. After the power supply is turned off, this LSI should be placed in the STOP mode, or placed in the reset state by utilizing the voltage detection circuit or controlling the externally input reset signal, before the voltage falls below the operating range. The range of operating voltage varies with the setting of the user option byte (000C2H or 010C2H).

2. Set the same value as 000C1H to 010C1H when the boot swap operation is used because 000C1H is replaced by 010C1H.

(3) 000C2H/010C2H

○ Setting of flash operation mode

Make the setting depending on the main system clock frequency (f_{MAIN}) and power supply voltage (V_{DD}) to be used.

- LV (low voltage main) mode
- LS (low speed main) mode
- HS (high speed main) mode

○ Setting of the frequency of the high-speed on-chip oscillator

- Select from 32 MHz/24 MHz/16 MHz/12 MHz/8 MHz/6 MHz/4 MHz /3 MHz/2 MHz/1 MHz (TYP.).

Caution Set the same value as 000C2H to 010C2H when the boot swap operation is used because 000C2H is replaced by 010C2H.

25.1.2 On-chip debug option byte (000C3H/ 010C3H)

○ Control of on-chip debug operation

- On-chip debug operation is disabled or enabled.

○ Handling of data of flash memory in case of failure in on-chip debug security ID authentication

- Data of flash memory is erased or not erased in case of failure in on-chip debug security ID authentication.

Caution Set the same value as 000C3H to 010C3H when the boot swap operation is used because 000C3H is replaced by 010C3H.

25.2 Format of User Option Byte

The format of user option byte is shown below.

Figure 25-1. Format of User Option Byte (000C0H/010C0H)

Address: 000C0H/010C0H[Note 1]

7	6	5	4	3	2	1	0
WDTINIT	WINDOW1	WINDOW0	WDTON	WDCS2	WDCS1	WDCS0	WDSTBYON

WDTINIT	Use of interval interrupt of watchdog timer
0	Interval interrupt is not used.
1	Interval interrupt is generated when 75% + 1/2f_{IL} of the overflow time is reached.

WINDOW1	WINDOW0	Watchdog timer window open period[Note 2]
0	0	Setting prohibited
0	1	50%
1	0	75% [Note 3]
1	1	100%

WDTON	Operation control of watchdog timer counter
0	Counter operation disabled (counting stopped after reset)
1	Counter operation enabled (counting started after reset)

WDCS2	WDCS1	WDCS0	Watchdog timer overflow time (f_{IL} = 17.25 kHz (MAX.))
0	0	0	$2^6/f_{IL}$ (3.71 ms)
0	0	1	$2^7/f_{IL}$ (7.42 ms)
0	1	0	$2^8/f_{IL}$ (14.84 ms)
0	1	1	$2^9/f_{IL}$ (29.68 ms)
1	0	0	$2^{11}/f_{IL}$ (118.72 ms)
1	0	1	$2^{13}/f_{IL}$ (474.89 ms)
1	1	0	$2^{14}/f_{IL}$ (949.79 ms)
1	1	1	$2^{16}/f_{IL}$ (3799.18 ms)

WDSTBYON	Operation control of watchdog timer counter (HALT/STOP mode)
0	Counter operation stopped in HALT/STOP mode[Note 2]
1	Counter operation enabled in HALT/STOP mode

Notes 1. Set the same value as 000C0H to 010C0H when the boot swap operation is used because 000C0H is replaced by 010C0H.

2. The window open period is 100% when WDSTBYON = 0, regardless the value of the WINDOW1 and WINDOW0 bits.

<R> **Note 3.** When the window open period is set to 75%, clearing the counter of the watchdog timer (writing ACH to WDTE) must proceed outside the corresponding period from among those listed below, over which clearing of the counter is prohibited (for example, confirming that the interval timer interrupt request flag (WDTIIF) of the watchdog timer is set).

WDCS2	WDCS1	WDCS0	Watchdog timer overflow time (f_{IL} = 17.25 kHz (MAX.))	Period over which clearing the counter is prohibited when the window open period is set to 75%
0	0	0	$2^6/f_{IL}$ (3.71 ms)	1.85 ms to 2.51 ms
0	0	1	$2^7/f_{IL}$ (7.42 ms)	3.71 ms to 5.02 ms
0	1	0	$2^8/f_{IL}$ (14.84 ms)	7.42 ms to 10.04 ms
0	1	1	$2^9/f_{IL}$ (29.68 ms)	14.84 ms to 20.08 ms
1	0	0	$2^{11}/f_{IL}$ (118.72 ms)	56.36 ms to 80.32 ms
1	0	1	$2^{13}/f_{IL}$ (474.89 ms)	237.44 ms to 321.26 ms
1	1	0	$2^{14}/f_{IL}$ (949.79 ms)	474.89 ms to 642.51 ms
1	1	1	$2^{16}/f_{IL}$ (3799.18 ms)	1899.59 ms to 2570.04 ms

Remark f_{IL}: Low-speed on-chip oscillator clock frequency

Figure 25-2. Format of User Option Byte (000C1H/010C1H) (1/2)

Address: 000C1H/010C1H[Note]

7	6	5	4	3	2	1	0
VPOC2	VPOC1	VPOC0	1	LVIS1	LVIS0	LVIMDS1	LVIMDS0

● LVD setting (interrupt & reset mode)

Detection voltage			Option byte setting value						
V_{LVDH}		V_{LVDL}	VPOC2	VPOC1	VPOC0	LVIS1	LVIS0	Mode setting	
Rising edge	Falling edge	Falling edge						LVIMDS1	LVIMDS0
1.77 V	1.73 V	1.63 V	0	0	0	1	0	1	0
1.88 V	1.84 V					0	1		
2.92 V	2.86 V					0	0		
1.98 V	1.94 V	1.84 V		0	1	1	0		
2.09 V	2.04 V					0	1		
3.13 V	3.06 V					0	0		
2.61 V	2.55 V	2.45 V		1	0	1	0		
2.71 V	2.65 V					0	1		
2.92 V	2.86 V	2.75 V		1	1	1	0		
3.02 V	2.96 V					0	1		
–			Setting of values other than above is prohibited.						

● LVD setting (reset mode)

Detection voltage		Option byte setting value						
V_{LVD}		VPOC2	VPOC1	VPOC0	LVIS1	LVIS0	Mode setting	
Rising edge	Falling edge						LVIMDS1	LVIMDS0
1.67 V	1.63 V	0	0	0	1	1	1	1
1.77 V	1.73 V		0	0	1	0		
1.88 V	1.84 V		0	1	1	1		
1.98 V	1.94 V		0	1	1	0		
2.09 V	2.04 V		0	1	0	1		
2.50 V	2.45 V		1	0	1	1		
2.61 V	2.55 V		1	0	1	0		
2.71 V	2.65 V		1	0	0	1		
2.81 V	2.75 V		1	1	1	1		
2.92 V	2.86 V		1	1	1	0		
3.02 V	2.96 V		1	1	0	1		
3.13 V	3.06 V		0	1	0	0		
–		Setting of values other than above is prohibited.						

Note Set the same value as 000C1H to 010C1H when the boot swap operation is used because 000C1H is replaced by 010C1H.

Remarks 1. For details on the LVD circuit, see **CHAPTER 22 VOLTAGE DETECTOR.**

2. The detection voltage is a typical value. For details, see **30.8.4 LVD circuit characteristics.**

(**Cautions** are listed on the next page.)

Figure 25-2. Format of User Option Byte (000C1H/010C1H) (2/2)

Address: 000C1H/010C1H[Note]

7	6	5	4	3	2	1	0
VPOC2	VPOC1	VPOC0	1	LVIS1	LVIS0	LVIMDS1	LVIMDS0

● LVD setting (interrupt mode)

Detection voltage		Option byte setting value						
V_{LVD}		VPOC2	VPOC1	VPOC0	LVIS1	LVIS0	Mode setting	
Rising edge	Falling edge						LVIMDS1	LVIMDS0
1.67 V	1.63 V	0	0	0	1	1	0	1
1.77 V	1.73 V		0	0	1	0		
1.88 V	1.84 V		0	1	1	1		
1.98 V	1.94 V		0	1	1	0		
2.09 V	2.04 V		0	1	0	1		
2.50 V	2.45 V		1	0	1	1		
2.61 V	2.55 V		1	0	1	0		
2.71 V	2.65 V		1	0	0	1		
2.81 V	2.75 V		1	1	1	1		
2.92 V	2.86 V		1	1	1	0		
3.02 V	2.96 V		1	1	0	1		
3.13 V	3.06 V		0	1	0	0		
–		Setting of values other than above is prohibited.						

● LVD off (by controlling the externally input reset signal on the $\overline{\text{RESET}}$ pin)

Detection voltage		Option byte setting value						
V_{LVD}		VPOC2	VPOC1	VPOC0	LVIS1	LVIS0	Mode setting	
Rising edge	Falling edge						LVIMDS1	LVIMDS0
–	–	1	×	×	×	×	×	1
–		Setting of values other than above is prohibited.						

Note Set the same value as 000C1H to 010C1H when the boot swap operation is used because 000C1H is replaced by 010C1H.

Cautions 1. Be sure to set bit 4 to "1".

2. After power is supplied, the reset state must be retained until the operating voltage becomes in the range defined in 30.6 AC Characteristics. This is done by utilizing the voltage detection circuit or controlling the externally input reset signal. After the power supply is turned off, this LSI should be placed in the STOP mode, or placed in the reset state by utilizing the voltage detection circuit or controlling the externally input reset signal, before the voltage falls below the operating range. The range of operating voltage varies with the setting of the user option byte (000C2H or 010C2H).

Remarks 1. ×: don't care

2. For details on the LVD circuit, see **CHAPTER 22 VOLTAGE DETECTOR.**

3. The detection voltage is a typical value. For details, see **30.8.4 LVD circuit characteristics**.

Figure 25-3. Format of Option Byte (000C2H/010C2H)

Address: 000C2H/010C2H[Note]

7	6	5	4	3	2	1	0
CMODE1	CMODE0	1	0	FRQSEL3	FRQSEL2	FRQSEL1	FRQSEL0

CMODE1	CMODE0	Setting of flash operation mode		
			Operating Frequency Range (f_{MAIN})	Operating Voltage Range (V_{DD})
0	0	LV (low voltage main) mode	1 to 4 MHz	1.6 to 3.6 V
1	0	LS (low speed main) mode	1 to 8 MHz	1.8 to 3.6 V
1	1	HS (high speed main) mode	1 to 16 MHz	2.4 to 3.6 V
			1 to 32 MHz	2.7 to 3.6 V
Other than above		Setting prohibited		

FRQSEL3	FRQSEL2	FRQSEL1	FRQSEL0	Frequency of the high-speed on-chip oscillator
1	0	0	0	32 MHz
0	0	0	0	24 MHz
1	0	0	1	16 MHz
0	0	0	1	12 MHz
1	0	1	0	8 MHz
0	0	1	0	6 MHz
1	0	1	1	4 MHz
0	0	1	1	3 MHz
1	1	0	0	2 MHz
1	1	0	1	1 MHz
Other than above				Setting prohibited

Note Set the same value as 000C2H to 010C2H when the boot swap operation is used because 000C2H is replaced by 010C2H.

Cautions 1. Be sure to set bit 5 to "1" and bit 4 to "0"

2. The ranges of operation frequency and operation voltage vary depending on the flash operation mode. For details, see 30.6 AC Characteristics.

25.3 Format of On-chip Debug Option Byte

The format of on-chip debug option byte is shown below.

Figure 25-4. Format of On-chip Debug Option Byte (000C3H/010C3H)

Address: 000C3H/010C3H[Note]

7	6	5	4	3	2	1	0
OCDENSET	0	0	0	0	1	0	OCDERSD

OCDENSET	OCDERSD	Control of on-chip debug operation
0	0	Disables on-chip debug operation.
0	1	Setting prohibited
1	0	Enables on-chip debugging. Erases data of flash memory in case of failures in authenticating on-chip debug security ID.
1	1	Enables on-chip debugging. Does not erases data of flash memory in case of failures in authenticating on-chip debug security ID.

Note Set the same value as 000C3H to 010C3H when the boot swap operation is used because 000C3H is replaced by 010C3H.

Caution Bits 7 and 0 (OCDENSET and OCDERSD) can only be specified a value.
Be sure to set 000010B to bits 6 to 1.

Remark The value on bits 3 to 1 will be written over when the on-chip debug function is in use and thus it will become unstable after the setting.
However, be sure to set the default values (0, 1, and 0) to bits 3 to 1 at setting.

25.4 Setting of Option Byte

The user option byte and on-chip debug option byte can be set using the link option, in addition to describing to the source. When doing so, the contents set by using the link option take precedence, even if descriptions exist in the source, as mentioned below.

A software description example of the option byte setting is shown below.

```
OPT   CSEG        OPT_BYTE
      DB          36H     ; Does not use interval interrupt of watchdog timer,
                          ; Enables watchdog timer operation,
                          ; Window open period of watchdog timer is 50%,
                          ; Overflow time of watchdog timer is 2^9/fIL,
                          ; Stops watchdog timer operation during HALT/STOP mode
      DB          16H     ; Select 1.63 V for VLVDL
                          ; Select rising edge 1.88 V, falling edge 1.84 V for VLVDH
                          ; Select the interrupt & reset mode as the LVD operation mode
      DB          AAH     ; Select the LS (low speed main) mode as the flash operation mode
                            and 8 MHz as the frequency of the high-speed on-chip oscillator
      DB          85H     ; Enables on-chip debug operation, does not erase flash memory
                            data when security ID authorization fails
```

When the boot swap function is used during self programming, 000C0H to 000C3H is switched to 010C0H to 010C3H. Describe to 010C0H to 010C3H, therefore, the same values as 000C0H to 000C3H as follows.

```
OPT2  CSEG   AT   010C0H
      DB          36H     ; Does not use interval interrupt of watchdog timer,
                          ; Enables watchdog timer operation,
                          ; Window open period of watchdog timer is 50%,
                          ; Overflow time of watchdog timer is 2^9/fIL,
                          ; Stops watchdog timer operation during HALT/STOP mode
      DB          16H     ; Select 1.63 V for VLVDL
                          ; Select rising edge 1.88 V, falling edge 1.84 V for VLVDH
                          ; Select the interrupt & reset mode as the LVD operation mode
      DB          AAH     ; Select the LS (low speed main) mode as the flash operation mode
                            and 1 MHz as the frequency of the high-speed on-chip oscillator
      DB          85H     ; Enables on-chip debug operation, does not erase flash memory
                            data when security ID authorization fails
```

Caution To specify the option byte by using assembly language, use OPT_BYTE as the relocation attribute name of the CSEG pseudo instruction. To specify the option byte to 010C0H to 010C3H in order to use the boot swap function, use the relocation attribute AT to specify an absolute address.

CHAPTER 26 FLASH MEMORY

The RL78/G1D incorporates the flash memory to which a program can be written, erased, and overwritten. The flash memory includes the “code flash memory”, in which programs can be executed, and the “data flash memory”, an area for storing data.

The following methods for programming the flash memory are available.

The code flash memory can be rewritten to through serial programming using a flash memory programmer or an external device (UART communication), or through self-programming.

- Serial programming using flash memory programmer (see **26.4**)
  Data can be written to the flash memory on-board or off-board by using a dedicated flash memory programmer.

- Serial programming using external device (UART communication) (see **26.2**)
  Data can be written to the flash memory on-board through UART communication with an external device (microcontroller or ASIC).

- Self-programming (see **26.6**)
  The user application can execute self-programming of the code flash memory by using the flash self-programming library.

The data flash memory can be rewritten to by using the data flash library during user program execution (background operation). For access and writing to the data flash memory, see **26.8 Data Flash**.

26.1 Serial Programming Using Flash Memory Programmer

The following dedicated flash memory programmer can be used to write data to the internal flash memory of the RL78 microcontroller.

- PG-FP5, FL-PR5
- E1 on-chip debugging emulator

Data can be written to the flash memory on-board or off-board, by using a dedicated flash memory programmer.

(1) On-board programming

The contents of the flash memory can be rewritten after the RL78 microcontroller has been mounted on the target system. The connectors that connect the dedicated flash memory programmer must be mounted on the target system.

(2) Off-board programming

Data can be written to the flash memory before the RL78 microcontroller is mounted on the target system.

Remark FL-PR5 is produced by Naito Densei Machida Mfg. Co., Ltd.

Table 26-1. Wiring Between RL78/G1D and Dedicated Flash Memory Programmer

Pin Configuration of Dedicated Flash Memory Programmer				Pin Name	Pin No.
					48-pin
Signal Name		I/O	Pin Function		WQFN (6 × 6)
PG-FP5, FL-PR5	E1 on-chip debugging emulator				
–	TOOL0	I/O	Transmit/receive signal	TOOL0/ P40	13
SI/RxD	–	I/O	Transmit/receive signal		
–	$\overline{\text{RESET}}$	Output	Reset signal	$\overline{\text{RESET}}$	14
/RESET	–	Output			
V_{DD}		I/O	V_{DD} voltage generation/ power monitoring	V_{DD}	22
GND		–	Ground	V_{SS}	21
				REGC Note	20
FLMD1	EMV_{DD}	–	Driving power for TOOL0 pin	V_{DD}	22

Note Connect REGC pin to ground via a capacitor (0.47 to 1 μF).

Remark Pins that are not indicated in the above table can be left open when using the flash memory programmer for flash programming.

26.1.1 Programming environment

The environment required for writing a program to the flash memory of the RL78 microcontroller is illustrated below.

Figure 26-1. Environment for Writing Program to Flash Memory

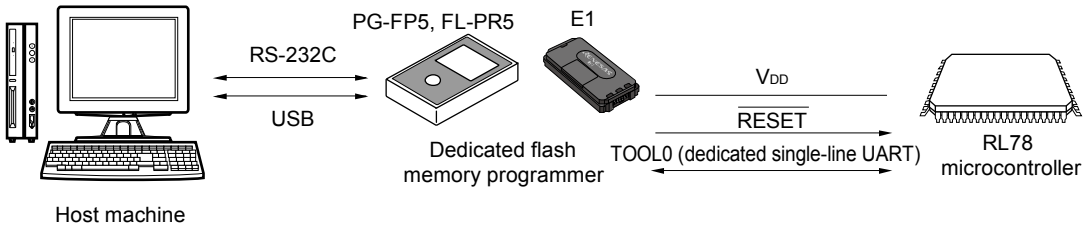

A host machine that controls the dedicated flash memory programmer is necessary.

To interface between the dedicated flash memory programmer and the RL78 microcontroller, the TOOL0 pin is used for manipulation such as writing and erasing via a dedicated single-line UART.

26.1.2 Communication mode

Communication between the dedicated flash memory programmer and the RL78 microcontroller is established by serial communication using the TOOL0 pin via a dedicated single-line UART of the RL78 microcontroller.

Transfer rate: 1 M, 500 k, 250 k, 115.2 kbps

Figure 26-2. Communication with Dedicated Flash Memory Programmer

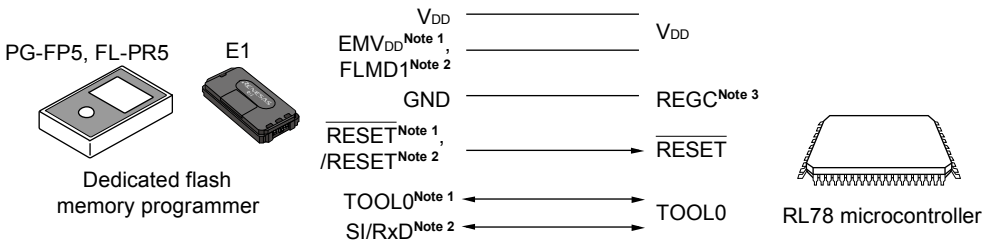

Notes 1. When using E1 on-chip debugging emulator.

2. When using PG-FP5 or FL-PR5.

3. Connect REGC pin to ground via a capacitor (0.47 to 1 μF).

The dedicated flash memory programmer generates the following signals for the RL78 microcontroller. See each manual of PG-FP5, FL-PR5, or E1 on-chip debugging emulator for details.

Table 26-2. Pin Connection

Dedicated Flash Memory Programmer				RL78 Microcontroller
Signal Name		I/O	Pin Function	Pin Name
PG-FP5, FL-PR5	E1 on-chip debugging emulator			
V_{DD}		I/O	V_{DD} voltage generation/power monitoring	V_{DD}
GND		–	Ground	V_{SS}, REGC Note
FLMD1	EMV_{DD}	–	Driving power for TOOL0 pin	V_{DD}
/RESET	–	Output	Reset signal	$\overline{RESET}$
–	$\overline{RESET}$	Output		
–	TOOL0	I/O	Transmit/receive signal	TOOL0
SI/RxD	–	I/O	Transmit/receive signal	

Note Connect REGC pin to ground via a capacitor (0.47 to 1 μF).

26.2 Serial Programming Using External Device (that Incorporates UART)

On-board data writing to the internal flash memory is possible by using the RL78 microcontroller and an external device (a microcontroller or ASIC) connected to a UART.

On the development of flash memory programmer by user, refer to the **RL78 Microcontrollers (RL78 Protocol A) Programmer Edition Application Note (R01AN0815)**.

26.2.1 Programming environment

The environment required for writing a program to the flash memory of the RL78 microcontroller is illustrated below.

Figure 26-3. Environment for Writing Program to Flash Memory

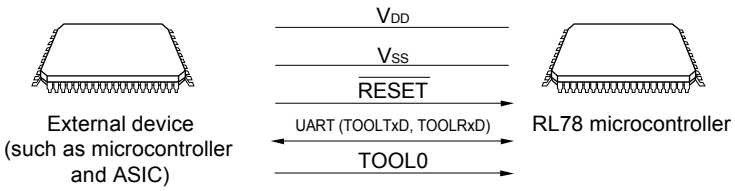

Processing to write data to or erase data from the RL78 microcontroller by using an external device is performed on-board. Off-board writing is not possible.

26.2.2 Communication mode

Communication between the external device and the RL78 microcontroller is established by serial communication using the TOOLTxD and TOOLRxD pins via the dedicated UART of the RL78 microcontroller.

Transfer rate: 1 M, 500 k, 250 k, 115.2kbps

Figure 26-4. Communication with External Device

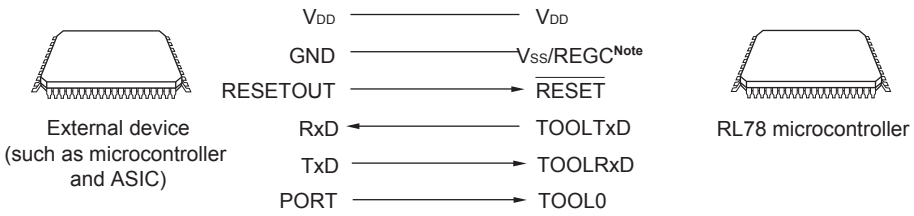

Note Connect REGC pin to ground via a capacitor (0.47 to 1 μF).

The external device generates the following signals for the RL78 microcontroller.

Table 26-3. Pin Connection

External Device			RL78 Microcontroller
Signal Name	I/O	Pin Function	Pin Name
V_{DD}	I/O	V_{DD} voltage generation/power monitoring	V_{DD}
GND	–	Ground	V_{SS}, REGC Note
RESETOUT	Output	Reset signal output	$\overline{\text{RESET}}$
RxD	Input	Receive signal	TOOLTxD
TxD	Output	Transmit signal	TOOLRxD
PORT	Output	Mode signal	TOOL0

Note Connect REGC pin to ground via a capacitor (0.47 to 1 μF).

26.3 Connection of Pins on Board

To write the flash memory on-board by using the flash memory programmer, connectors that connect the dedicated flash memory programmer must be provided on the target system. First provide a function that selects the normal operation mode or flash memory programming mode on the board.

When the flash memory programming mode is set, all the pins not used for programming the flash memory are in the same status as immediately after reset. Therefore, if the external device does not recognize the state immediately after reset, the pins must be handled as described below.

Remark For the flash memory programming mode, see **26.4.2 Flash memory programming mode**.

26.3.1 P40/TOOL0 pin

In the flash memory programming mode, connect this pin to the dedicated flash memory programmer via an external 1 kΩ pull-up resistor.

When this pin is used as the port pin, use that by the following method.

When used as an input pin: Input of low-level is prohibited for t_{HD} period after external pin reset release. However, when this pin is used via pull-down resistors, use the 500 kΩ or more resistors.

When used as an output pin: When this pin is used via pull-down resistors, use the 500 kΩ or more resistors.

Remarks 1. t_{HD}: How long to keep the TOOL0 pin at the low level from when the external and internal resets end for setting of the flash memory programming mode (see **30.11 Timing Specs for Switching Flash Memory Programming Modes**)

2. The SAU and IICA pins are not used for communication between the RL78 microcontroller and dedicated flash memory programmer, because single-line UART (TOOL0 pin) is used.

26.3.2 $\overline{\text{RESET}}$ pin

Signal conflict will occur if the reset signal of the dedicated flash memory programmer and external device are connected to the $\overline{\text{RESET}}$ pin that is connected to the reset signal generator on the board. To prevent this conflict, isolate the connection with the reset signal generator.

The flash memory will not be correctly programmed if the reset signal is input from the user system while the flash memory programming mode is set. Do not input any signal other than the reset signal of the dedicated flash memory programmer and external device.

Figure 26-5. Signal Conflict ($\overline{\text{RESET}}$ Pin)

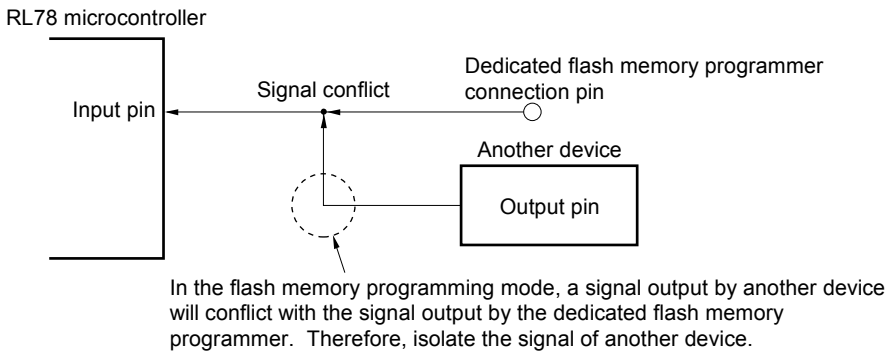

26.3.3 Port pins

When the flash memory programming mode is set, all the pins not used for flash memory programming enter the same status as that immediately after reset. If external devices connected to the ports do not recognize the port status immediately after reset, the port pin must be connected to V_{DD} or to V_{SS} via a resistor.

26.3.4 REGC pin

Connect the REGC pin to GND via a capacitor (0.47 to 1 μF) in the same manner as during normal operation. Also, use a capacitor with good characteristics, since it is used to stabilize internal voltage.

Remark In the flash memory programming mode, the high-speed on-chip oscillator clock (f_{IH}) is used.

26.3.5 X1 and X2 pins

Connect X1 and X2 in the same status as in the normal operation mode.

Remark In the flash memory programming mode, the high-speed on-chip oscillator clock (f_{IH}) is used.

26.3.6 Power supply

To use the supply voltage output of the flash memory programmer, connect the V_{DD} pin to V_{DD} of the flash memory programmer, and the V_{SS} pin to GND of the flash memory programmer.

To use the on-board supply voltage, connect in compliance with the normal operation mode.

However, when writing to the flash memory by using the flash memory programmer and using the on-board supply voltage, be sure to connect the V_{DD} and V_{SS} pins to V_{DD} and GND of the flash memory programmer to use the power monitor function with the flash memory programmer.

26.4 Serial Programming Method

26.4.1 Serial programming procedure

The following figure illustrates a flow for rewriting the code flash memory through serial programming.

Figure 26-6. Code Flash Memory Manipulation Procedure

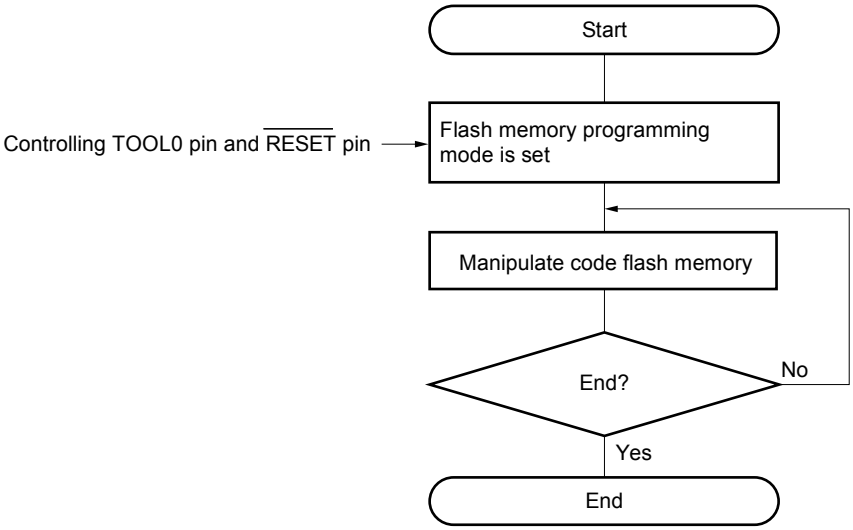

26.4.2 Flash memory programming mode

To rewrite the contents of the code flash memory through serial programming, set the RL78 microcontroller to the flash memory programming mode. To enter the mode, set as follows.

<Serial programming using the dedicated flash memory programmer>

Connect the RL78 microcontroller to a dedicated flash memory programmer. Communication from the dedicated flash memory programmer is performed to automatically switch to the flash memory programming mode.

<Serial programming using an external device (UART communication)>

Set the TOOL0 pin to the low level, and then cancel the reset (see **Table 26-4**). After that, enter flash memory programming mode according to the procedures <1> to <4> shown in **Figure 26-7**. For details, refer to the **RL78 Microcontrollers (RL78 Protocol A) Programmer Edition Application Note (R01AN0815)**.

Table 26-4. Relationship between TOOL0 Pin and Operation Mode after Reset Release

TOOL0	Operation Mode
V_{DD}	Normal operation mode
0 V	Flash memory programming mode

Figure 26-7. Setting of Flash Memory Programming Mode

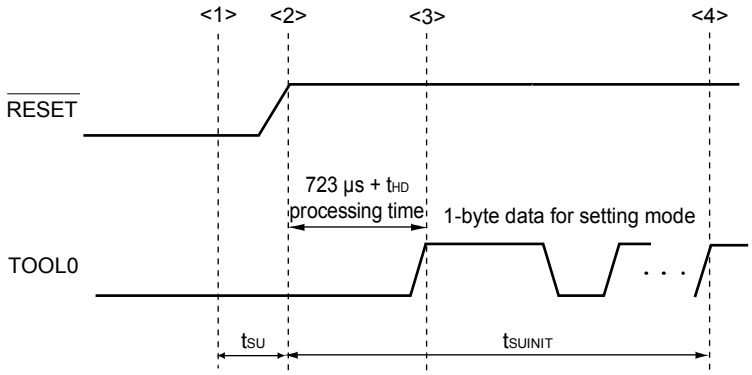

<1> The low level is input to the TOOL0 pin.
<2> The external reset ends (POR and LVD reset must end before the external reset ends.).
<3> The TOOL0 pin is set to the high level.
<4> Baud rate setting by UART reception is completed.

Remark t_{SUINIT}: The segment shows that it is necessary to finish specifying the initial communication settings within 100 ms from when the resets end.
t_{SU}: How long from when the TOOL0 pin is placed at the low level until an external reset ends
t_{HD}: How long to keep the TOOL0 pin at the low level from when the external and internal resets end (the flash firmware processing time is excluded)

For details, see **30.11 Timing Specs for Switching Flash Memory Programming Modes**.

There are two flash memory programming modes: wide voltage mode and full speed mode. The supply voltage value applied to the microcontroller during write operations and the setting information of the user option byte for setting of the flash memory programming mode determine which mode is selected.

When a dedicated flash memory programmer is used for serial programming, setting the voltage on GUI selects the mode automatically.

Table 26-5. Programming Modes and Voltages at Which Data Can Be Written, Erased, or Verified

Power Supply Voltage (V_{DD})	User Option Byte Setting for Switching to Flash Memory Programming Mode		Flash Programming Mode
	Flash Operation Mode	Operating Frequency	
2.7 V ≤ V_{DD} ≤ 3.6 V	Blank state		Full speed mode
	HS (high speed main) mode	1 MHz to 32 MHz	Full speed mode
	LS (low speed main) mode	1 MHz to 8 MHz	Wide voltage mode
	LV (low voltage main) mode	1 MHz to 4 MHz	Wide voltage mode
2.4 V ≤ V_{DD} < 2.7 V	Blank state		Full speed mode
	HS (high speed main) mode	1 MHz to 16 MHz	Full speed mode
	LS (low speed main) mode	1 MHz to 8 MHz	Wide voltage mode
	LV (low voltage main) mode	1 MHz to 4 MHz	Wide voltage mode
1.8 V ≤ V_{DD} < 2.4 V	Blank state		Wide voltage mode
	LS (low speed main) mode	1 MHz to 8 MHz	Wide voltage mode
	LV (low voltage main) mode	1 MHz to 4 MHz	Wide voltage mode

Remarks 1. Using both the wide voltage mode and full speed mode imposes no restrictions on writing, erasing, or verification.

2. For details about communication commands, see **26.4.4 Communication commands**.

26.4.3 Selecting communication mode

Communication modes of the RL78 microcontroller are as follows.

Table 26-6. Communication Modes

Communication Mode	Standard Setting[Note 1]				Pins Used
	Port	Speed [Note 2]	Frequency	Multiply Rate	
1-line UART (when flash memory programmer is used, or when external device is used)	UART	115200 bps, 250000 bps, 500000 bps, 1 Mbps	–	–	TOOL0
Dedicated UART (when external device is used)	UART	115200 bps, 250000 bps, 500000 bps, 1 Mbps	–	–	TOOLTxD, TOOLRxD

Notes 1. Selection items for Standard settings on GUI of the flash memory programmer.

2. Because factors other than the baud rate error, such as the signal waveform slew, also affect UART communication, thoroughly evaluate the slew as well as the baud rate error.

26.4.4 Communication commands

The RL78 microcontroller executes serial programming through the commands listed in **Table 26-7.**

The signals sent from the dedicated flash memory programmer or external device to the RL78 microcontroller are called commands, and programming functions corresponding to the commands are executed. For details, refer to the **RL78 Microcontrollers (RL78 Protocol A) Programmer Edition Application Note (R01AN0815)**.

Table 26-7. Flash Memory Control Commands

Classification	Command Name	Function
Verify	Verify	Compares the contents of a specified area of the flash memory with data transmitted from the programmer.
Erase	Block Erase	Erases a specified area in the flash memory.
Blank check	Block Blank Check	Checks if a specified block in the flash memory has been correctly erased.
Write	Programming	Writes data to a specified area in the flash memory[Note].
Getting information	Silicon Signature	Gets the RL78 microcontroller information (such as the part number, flash memory configuration, and programming firmware version).
	Checksum	Gets the checksum data for a specified area.
	Security Get	Gets security information.
	Security Release	Release setting of prohibition of writing.
Others	Reset	Used to detect synchronization status of communication.
	Baud Rate Set	Sets baud rate when UART communication mode is selected.

Note Confirm that no data has been written to the write area. Because data cannot be erased after block erase is prohibited, do not write data if the data has not been erased.

Product information (such as product name and firmware version) can be obtained by executing the “Silicon Signature” command.

Table 26-8 is a list of signature data and **Table 26-9** shows an example of signature data.

Table 26-8. Signature Data List

Field Name	Description	Number of Transmit Data
Device code	The serial number assigned to the device	3 bytes
Device name	Device name (ASCII code)	10 bytes
Code flash memory area last address	Last address of code flash memory area (Sent from lower address. Example: 00000H to 1FFFFH (128 KB) → FFH, FFH, 00H)	3 bytes
Data flash memory area last address	Last address of data flash memory area (Sent from lower address. Example: F1000H to F2FFFH (8 KB) → FFH, 1FH, 0FH)	3 bytes
Firmware version	Version information of firmware for programming (Sent from upper address. Example: From Ver. 1.23 → 01H, 02H, 03H)	3 bytes

Table 26-9. Example of Signature Data

Field Name	Description	Number of Transmit Data	Data (Hexadecimal)
Device code	RL78 protocol A	3 bytes	10 00 06
Device name	R5F11AGG	10 bytes	52 = “R” 35 = “5” 46 = “F” 31 = “1” 31 = “1” 41 = “A” 47 = “G” 47 = “G” 20 = “ ” 20 = “ ”
Code flash memory area last address	Code flash memory area 00000H to 1FFFFH (128 KB)	3 bytes	FF FF 00
Data flash memory area last address	Data flash memory area F1000H to F2FFFH (8 KB)	3 bytes	FF 1F 0F
Firmware version	Ver.1.23	3 bytes	01 02 03

26.5 Processing Time for Each Command When PG-FP5 Is in Use (Reference Value)

The following shows the processing time for each command (reference value) when PG-FP5 is used as a dedicated flash memory programmer.

Table 26-10. Processing Time for Each Command When PG-FP5 Is in Use (Reference Value)

PG-FP5 Command	Code Flash		
	128 Kbytes	192 Kbytes	256 Kbytes
Erasing	2 s	2 s	2.5 s
Writing	3.5 s	5 s	6 s
Verification	3.5 s	4.5 s	5.5 s
Writing after erasing	4.5 s	6.5 s	8 s

Remark The command processing times (reference values) shown in the table are typical values under the following conditions.
Port: TOOL0 (single-line UART)
Speed: 1,000,000 bps
Mode: Full speed mode (flash operation mode: HS (high speed main) mode)

26.6 Self-Programming

The RL78 microcontroller supports a self-programming function that can be used to rewrite the code flash memory via a user program. Because this function allows a user application to rewrite the code flash memory by using the flash self-programming library, it can be used to upgrade the program in the field.

Cautions 1. The self-programming function cannot be used when the CPU operates with the subsystem clock.

2. To prohibit an interrupt during self-programming, in the same way as in the normal operation mode, execute the self-programming library in the state where the IE flag is cleared (0) by the DI instruction. To enable an interrupt, clear (0) the interrupt mask flag to accept in the state where the IE flag is set (1) by the EI instruction, and then execute the self-programming library.

3. The high-speed on-chip oscillator should be kept operating during self-programming. If it is kept stopping, the high-speed on-chip oscillator clock should be operated (HIOSTOP = 0). The self-programming library should be executed after 30 μs have elapsed.

Remarks 1. For details of the self-programming function, refer to **RL78 Microcontroller Flash Self Programming Library Type01 User's Manual (R01AN0350).**

2. For details of the time required to execute self-programming, see the notes on use that accompany the flash self-programming library tool.

The self-programming function has two flash memory programming modes; wide voltage mode and full speed mode.

Specify the mode that corresponds to the flash operation mode specified in bits CMODE1 and CMODE0 in option byte 000C2H.

Specify the full speed mode when the HS (high speed main) mode is specified. Specify the wide voltage mode when the LS (low speed main) mode or LV (low voltage main) mode is specified.

If the argument fsl_flash_voltage_u08 is 00H when the FSL_Init function of the flash self-programming library provided by Renesas Electronics is executed, full speed mode is specified. If the argument is other than 00H, the wide voltage mode is specified.

Remark Using both the wide voltage mode and full speed mode imposes no restrictions on writing, erasing, or verification.

26.6.1 Self-programming procedure

The following figure illustrates a flow for rewriting the code flash memory by using a flash self-programming library.

Figure 26-8. Flow of Self Programming (Rewriting Flash Memory)

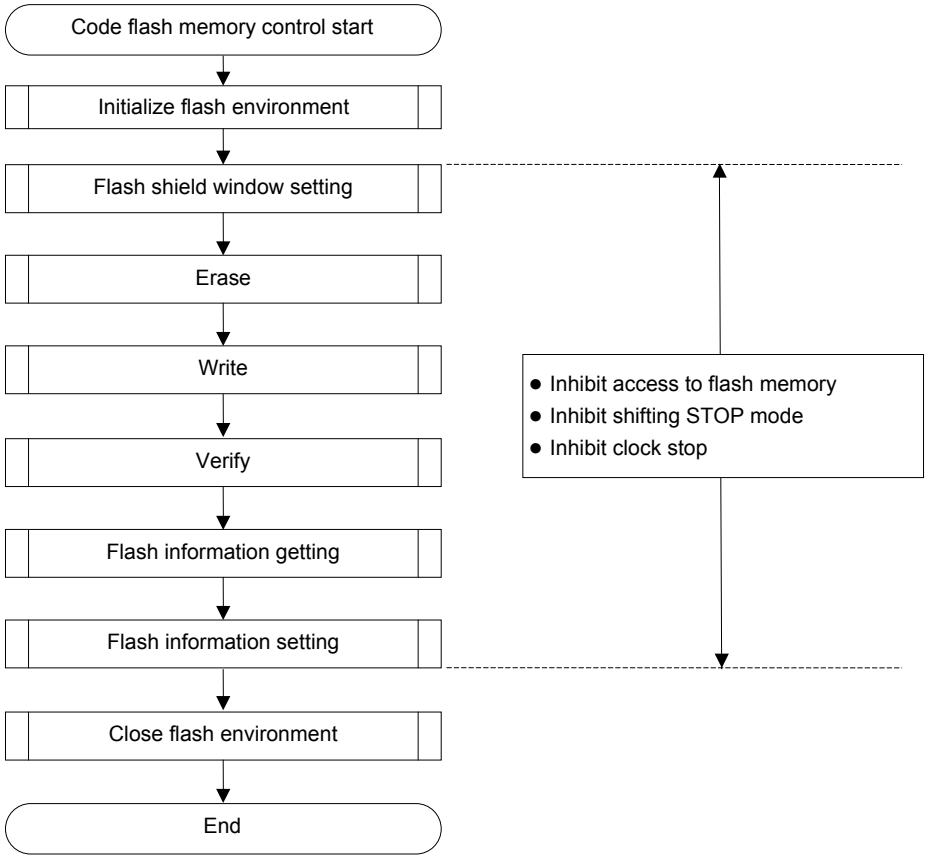

26.6.2 Boot swap function

If rewriting the boot area failed by temporary power failure or other reasons, restarting a program by resetting or overwriting is disabled due to data destruction in the boot area.

The boot swap function is used to avoid this problem.

Before erasing boot cluster 0[Note], which is a boot area, by self-programming, write a new boot program to boot cluster 1 in advance. When the program has been correctly written to boot cluster 1, swap this boot cluster 1 and boot cluster 0 by using the set information function of the firmware of the RL78 microcontroller, so that boot cluster 1 is used as a boot area. After that, erase or write the original area, boot cluster 0.

As a result, even if a power failure occurs while the area is being rewritten, the program is executed correctly because it is booted from boot cluster 1 to be swapped when the program is reset and started next.

Note A boot cluster is a 4 KB area and boot clusters 0 and 1 are swapped by the boot swap function.

Figure 26-9. Boot Swap Function

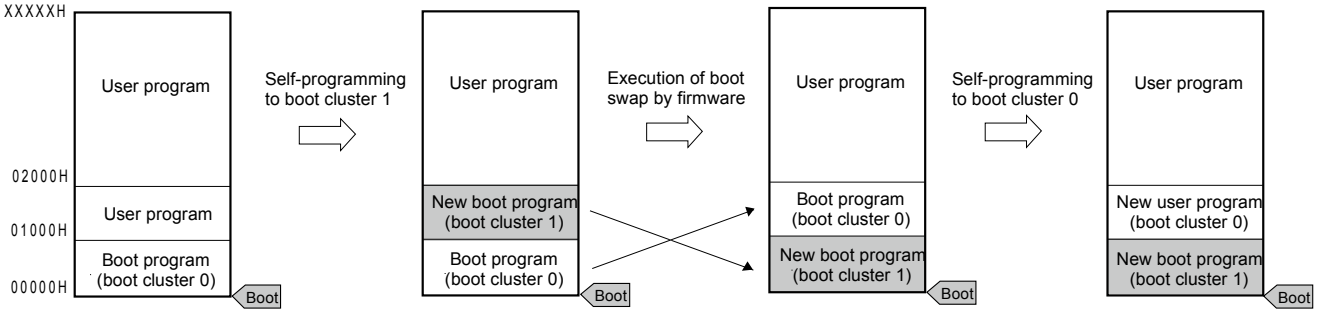

In an example of above figure, it is as follows.

Boot cluster 0: Boot area before boot swap

Boot cluster 1: Boot area after boot swap

Figure 26-10. Example of Executing Boot Swapping

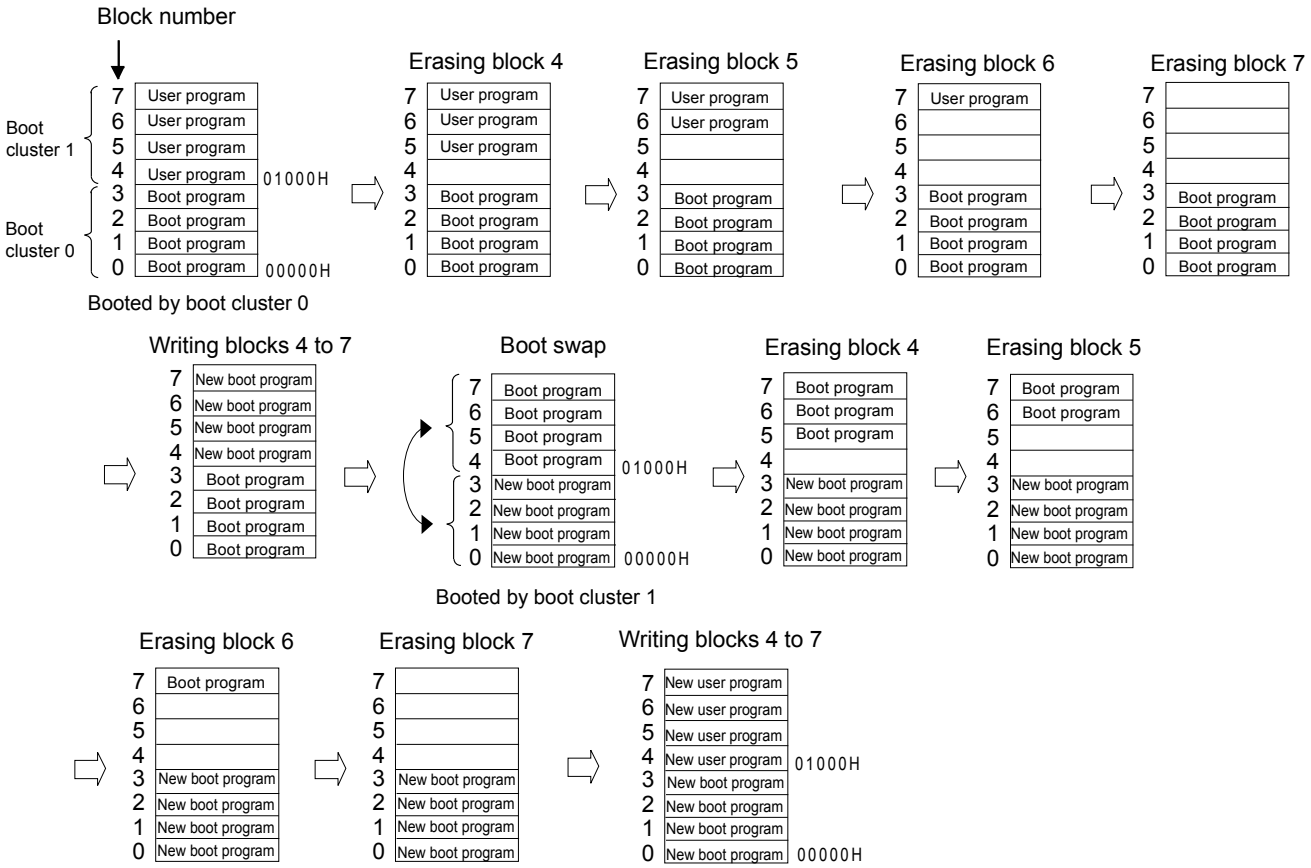

26.6.3 Flash shield window function

The flash shield window function is provided as one of the security functions for self-programming. It disables writing to and erasing areas outside the range specified as a window only during self-programming.

The window range can be set by specifying the start and end blocks. The window range can be set or changed during both serial programming and self-programming.

Writing to and erasing areas outside the window range are disabled during self-programming. During serial programming, however, areas outside the range specified as a window can be written and erased.

Figure 26-11. Flash Shield Window Setting Example
(Target Devices: R5F11AGG, Start Block: 04H, End Block: 06H)

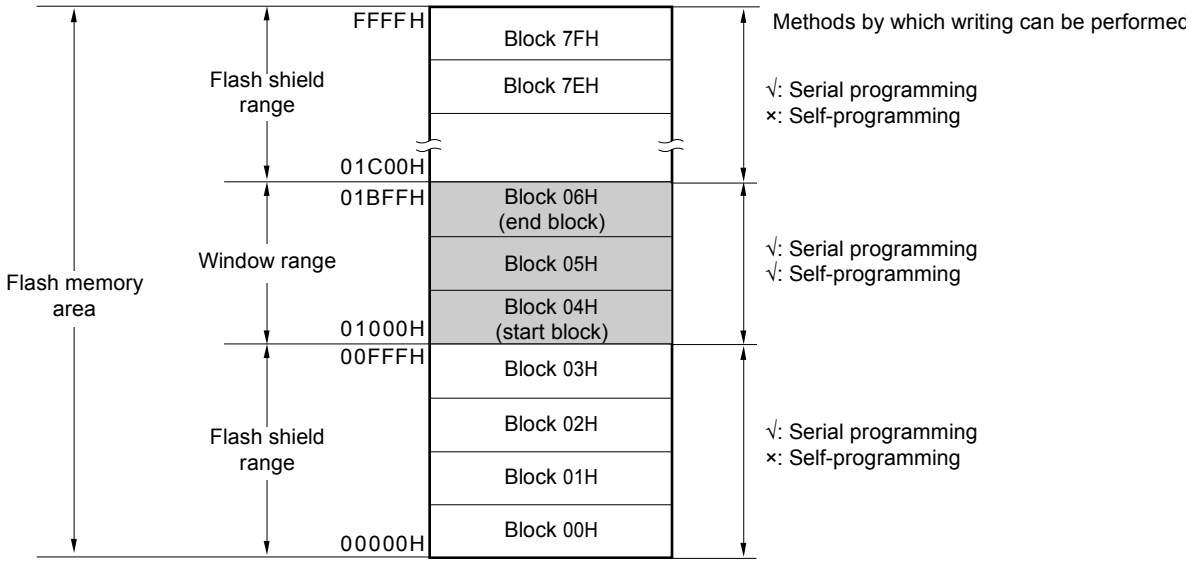

Cautions 1. If the rewrite-prohibited area of the boot cluster 0 overlaps with the flash shield window range, prohibition to rewrite the boot cluster 0 takes priority.

2. The flash shield window can only be used for the code flash memory (and is not supported for the data flash memory).

Table 26-11. Relationship Between Flash Shield Window Function Setting/Change Methods and Commands

Programming Conditions	Window Range Setting/Change Methods	Execution Commands	
		Block Erase	Write
Self-programming	Specify the starting and ending blocks by the flash self-programming library.	Block erasing is enabled only within the window range.	Writing is enabled only within the range of window range.
Serial programming	Specify the starting and ending blocks on GUI of dedicated flash memory programmer, etc.	Block erasing is enabled also outside the window range.	Writing is enabled also outside the window range.

Remark See **26.7 Security Settings** to prohibit writing/erasing during serial programming.

26.7 Security Settings

The RL78 microcontroller supports a security function that prohibits rewriting the user program written to the internal flash memory, so that the program cannot be changed by an unauthorized person.

The operations shown below can be performed using the Security Set command.

- Disabling block erase
  Execution of the block erase command for a specific block in the flash memory is prohibited during serial programming. However, blocks can be erased by means of self-programming.

- Disabling write
  Execution of the write command for entire blocks in the code flash memory is prohibited during serial programming. However, blocks can be written by means of self-programming.
  After the setting of prohibition of writing is specified, releasing the setting by the Security Release command is enabled by a reset.

- Disabling rewriting boot cluster 0
  Execution of the block erase command and write command on boot cluster 0 (00000H to 00FFFH) in the code flash memory is prohibited by this setting.

The block erase, write commands and rewriting boot cluster 0 are enabled by the default setting when the flash memory is shipped. Security can be set by serial programming and self-programming. Each security setting can be used in combination.

Table 26-12 shows the relationship between the erase and write commands when the RL78 microcontroller security function is enabled.

Caution The security function of the dedicated flash programmer does not support self-programming.

Remark To prohibit writing and erasing during self-programming, use the flash shield window function (see **26.6.3** for detail).

Table 26-12. Relationship Between Enabling Security Function and Command

(1) During serial programming

Valid Security	Executed Command	
	Block Erase	Write
Prohibition of block erase	Blocks cannot be erased.	Can be performed.[Note]
Prohibition of writing	Blocks can be erased.	Cannot be performed.
Prohibition of rewriting boot cluster 0	Boot cluster 0 cannot be erased.	Boot cluster 0 cannot be written.

Note Confirm that no data has been written to the write area. Because data cannot be erased after block erase is prohibited, do not write data if the data has not been erased.

(2) During self-programming

Valid Security	Executed Command	
	Block Erase	Write
Prohibition of block erase	Blocks can be erased.	Can be performed.
Prohibition of writing		
Prohibition of rewriting boot cluster 0	Boot cluster 0 cannot be erased.	Boot cluster 0 cannot be written.

Remark To prohibit writing and erasing during self-programming, use the flash shield window function (see **26.6.3** for detail).

Table 26-13. Setting Security in Each Programming Mode

(1) During serial programming

Security	Security Setting	How to Disable Security Setting
Prohibition of block erase	Set via GUI of dedicated flash memory programmer, etc.	Cannot be disabled after set.
Prohibition of writing		Set via GUI of dedicated flash memory programmer, etc.
Prohibition of rewriting boot cluster 0		Cannot be disabled after set.

Caution Releasing the setting of prohibition of writing is enabled only when the security is not set as the block erase prohibition and the boot cluster 0 rewrite prohibition with code flash memory area and data flash memory area being blanks.

(2) During self-programming

Security	Security Setting	How to Disable Security Setting
Prohibition of block erase	Set by using flash self-programming library.	Cannot be disabled after set.
Prohibition of writing		Cannot be disabled during self-programming (set via GUI of dedicated flash memory programmer, etc. during serial programming).
Prohibition of rewriting boot cluster 0		Cannot be disabled after set.

26.8 Data Flash

26.8.1 Data flash overview

An overview of the data flash memory is provided below.

- The user program can rewrite the data flash memory by using the data flash library. For details, refer to **RL78 Family Data Flash Library User's Manual**.
- The data flash memory can also be rewritten to through serial programming using the dedicated flash memory programmer or an external device.
- The data flash can be erased in 1-block (1-Kbyte) units.
- The data flash can be accessed only in 8-bit units.
- The data flash can be directly read by CPU instructions.
- Instructions can be executed from the code flash memory while rewriting the data flash memory (that is, background operation (BGO) is supported).
- Because the data flash memory is an area exclusively used for data, it cannot be used to execute instructions.
- Accessing the data flash memory is not possible while rewriting the code flash memory (during self-programming).
- Manipulating the DFLCTL register is not possible while rewriting the data flash memory.
- Transition to the STOP mode is not possible while rewriting the data flash memory.

Cautions 1. The data flash memory is stopped after a reset is canceled. The data flash control register (DFLCTL) must be set up in order to use the data flash memory.

2. The high-speed on-chip oscillator should be kept operating during data flash rewrite. If it is kept stopping, the high-speed on-chip oscillator clock should be operated (HIOSTOP = 0). The data flash library should be executed after 30 μs have elapsed.

Remark For rewriting the code flash memory via a user program, see **26.6 Self-Programming**.

26.8.2 Register controlling data flash memory

(1) Data flash control register (DFLCTL)

This register is used to enable or disable accessing to the data flash.

The DFLCTL register is set by a 1-bit or 8-bit memory manipulation instruction.

Reset input sets this register to 00H.

Address: F0090H After reset: 00H R/W

Symbol	7	6	5	4	3	2	1	<0>
DFLCTL	0	0	0	0	0	0	0	DFLEN

DFLEN	Data flash access control
0	Disables data flash access
1	Enables data flash access

Caution Manipulating the DFLCTL register is not possible while rewriting the data flash memory.

26.8.3 Procedure for accessing data flash memory

The data flash memory is stopped after a reset ends. To access the data flash, make initial settings according to the following procedure.

<1> Set bit 0 (DFLEN) of the data flash control register (DFLCTL) to 1.
<2> Wait for the setup to finish for software timer, etc.
The time setup takes differs for each flash operation mode for the main clock.
<Setup time for each flash operation mode>
- HS (High speed main): 5 μs
- LS (Low speed main): 720 ns
- LV (Low voltage main): 10 μs

<3> After the wait, the data flash memory can be accessed.

Cautions 1. Accessing the data flash memory is not possible during the setup time.
2. Transition to the STOP mode is not possible during the setup time. To enter the STOP mode during the setup time, clear DFLEN to 0 and then execute the STOP instruction.
3. The high-speed on-chip oscillator should be kept operating during data flash rewrite. If it is kept stopping, the high-speed on-chip oscillator clock should be operated (HIOSTOP = 0). The flash data library should be executed after 30 μs have elapsed.

After initialized, the data flash memory can be read by using a CPU instruction or can be read/written by using a data flash library.

If the DMA controller operates when the data flash memory is accessed, however, follow one of these procedures:

(A) Suspending/forcibly terminating DMA transfer
Before reading the data flash memory, suspend DMA transfer of all the channels used.
After setting the DWAITn bit to 1, however, wait at least for the duration of three clocks (f_{CLK}) before reading the data flash memory. After reading the data flash memory, lift the suspension of transfer by clearing the DWAITn bit to 0.
Or, forcibly terminate DMA transfer in accordance with the procedure in **15.5.5 Forced termination by software** before reading the data flash memory. Resume DMA transfer after the data flash memory has been read.

(B) Access the data flash memory
Access the data flash memory by using the newest data flash library.

(C) Insertion of NOP
Insert an NOP instruction immediately before the instruction that reads the data flash memory.

<Example>

```
MOVW    HL,!addr16    ; Reads RAM.
NOP                   ; Insert NOP instruction before reading data flash memory.
MOV     A,[DE]        ; Read data flash memory.
```

If a high-level language such as C is used, however, the compiler may generate two instructions for one code. In this case, the NOP instruction is not inserted immediately before the data flash memory read instruction. Therefore, read the data flash memory by (A) or (B) above.

Remarks 1. n: DMA channel number (n = 0, 1)
2. f_{CLK}: CPU/peripheral hardware clock frequency

CHAPTER 27 ON-CHIP DEBUG FUNCTION

27.1 Connecting E1 On-chip Debugging Emulator

The RL78 microcontroller uses the V_{DD}, $\overline{RESET}$, TOOL0, and V_{SS} pins to communicate with the host machine via an E1 on-chip debugging emulator. Serial communication is performed by using a single-line UART that uses the TOOL0 pin.

Caution The RL78 microcontroller has an on-chip debug function, which is provided for development and evaluation. Do not use the on-chip debug function in products designated for mass production, because the guaranteed number of rewritable times of the flash memory may be exceeded when this function is used, and product reliability therefore cannot be guaranteed. Renesas Electronics is not liable for problems occurring when the on-chip debug function is used.

Figure 27-1. Connection Example of E1 On-chip Debugging Emulator

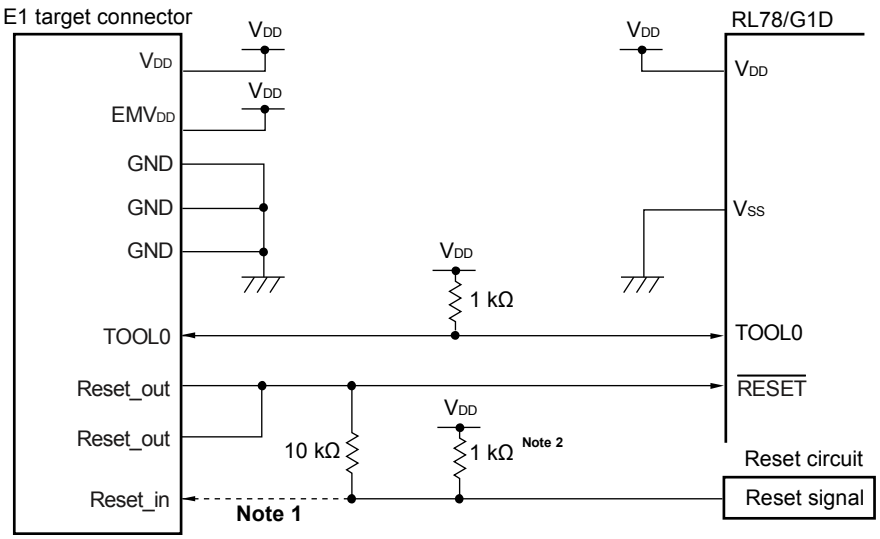

Notes 1. Connecting the dotted line is not necessary during serial programming.

2. If the reset circuit on the target system does not have a buffer and generates a reset signal only with resistors and capacitors, this pull-up resistor is not necessary.

Caution This circuit diagram is assumed that the reset signal outputs from an N-ch open-drain buffer (output resistor: 100 Ω or less)

27.2 On-Chip Debug Security ID

The RL78 microcontroller has an on-chip debug operation control bit in the flash memory at 000C3H (see **CHAPTER 25 OPTION BYTE**) and an on-chip debug security ID setting area at 000C4H to 000CDH, to prevent third parties from reading memory content.

When the boot swap function is used, also set a value that is the same as that of 010C3H and 010C4H to 010CDH in advance, because 000C3H, 000C4H to 000CDH and 010C3H, and 010C4H to 010CDH are switched.

Table 27-1. On-Chip Debug Security ID

Address	On-Chip Debug Security ID
000C4H to 000CDH	Any ID code of 10 bytes (Except for all FFHs)
010C4H to 010CDH	

27.3 Securing of User Resources

To perform communication between the RL78 microcontroller and E1 on-chip debugging emulator, as well as each debug function, the securing of memory space must be done beforehand.

If Renesas Electronics assembler or compiler is used, the items can be set by using link options.

(1) Securement of memory space

The shaded portions in Figure 27-2 are the areas reserved for placing the debug monitor program, so user programs or data cannot be allocated in these spaces. When using the on-chip debug function, these spaces must be secured so as not to be used by the user program. Moreover, this area must not be rewritten by the user program.

Figure 27-2. Memory Spaces Where Debug Monitor Programs Are Allocated

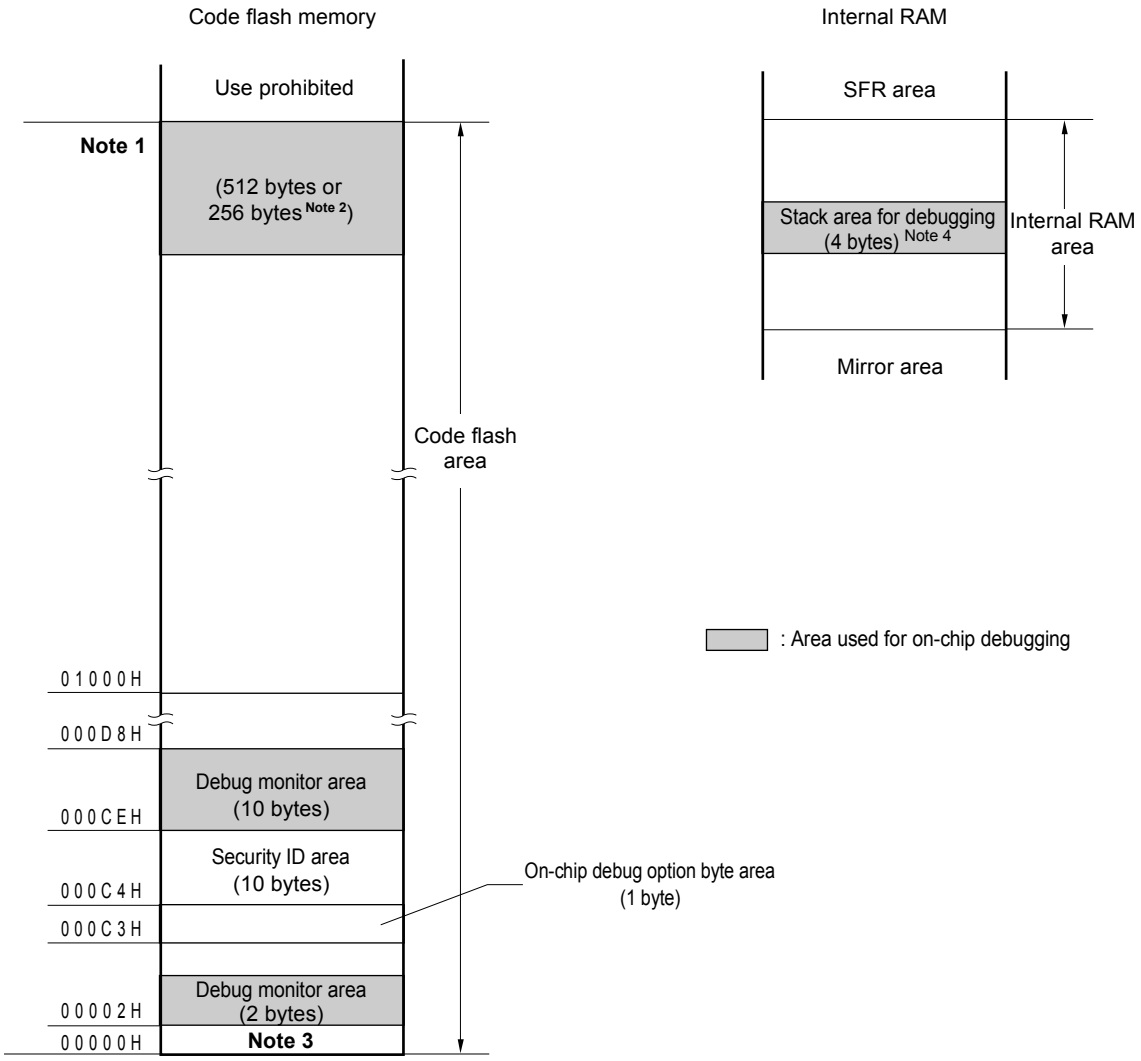

Notes 1. Address differs depending on products as follows.

Products	Address of **Note 1**
R5F11AGG	1FFFFH
R5F11AGH	2FFFFH
R5F11AGJ	3FFFFH

2. When real-time RAM monitor (RRM) function and dynamic memory modification (DMM) function are not used, it is 256 bytes.

3. In debugging, reset vector is rewritten to address allocated to a monitor program.

4. Since this area is allocated immediately before the stack area, the address of this area varies depending on the stack increase and decrease. That is, 4 extra bytes are consumed for the stack area used.

When using self-programming, 12 extra bytes are consumed for the stack area used.

CHAPTER 28 BCD CORRECTION CIRCUIT

28.1 BCD Correction Circuit Function

The result of addition/subtraction of the BCD (binary-coded decimal) code and BCD code can be obtained as BCD code with this circuit.

The decimal correction operation result is obtained by performing addition/subtraction having the A register as the operand and then adding/ subtracting the BCD correction result register (BCDADJ).

28.2 Registers Used by BCD Correction Circuit

The BCD correction circuit uses the following registers.

- BCD correction result register (BCDADJ)

(1) BCD correction result register (BCDADJ)

The BCDADJ register stores correction values for obtaining the add/subtract result as BCD code through add/subtract instructions using the A register as the operand.

The value read from the BCDADJ register varies depending on the value of the A register when it is read and those of the CY and AC flags.

The BCDADJ register is read by an 8-bit memory manipulation instruction.

Reset input sets this register to undefined.

Figure 28-1. Format of BCD Correction Result Register (BCDADJ)

Address: F00FEH After reset: undefined R

Symbol	7	6	5	4	3	2	1	0
BCDADJ								

28.3 BCD Correction Circuit Operation

The basic operation of the BCD correction circuit is as follows.

(1) Addition: Calculating the result of adding a BCD code value and another BCD code value by using a BCD code value

<1> The BCD code value to which addition is performed is stored in the A register.

<2> By adding the value of the A register and the second operand (value of one more BCD code to be added) as are in binary, the binary operation result is stored in the A register and the correction value is stored in the BCD correction result register (BCDADJ).

<3> Decimal correction is performed by adding in binary the value of the A register (addition result in binary) and the BCDADJ register (correction value), and the correction result is stored in the A register and CY flag.

Caution The value read from the BCDADJ register varies depending on the value of the A register when it is read and those of the CY and AC flags. Therefore, execute the instruction <3> after the instruction <2> instead of executing any other instructions. To perform BCD correction in the interrupt enabled state, saving and restoring the A register is required within the interrupt function. PSW (CY flag and AC flag) is restored by the RETI instruction.

Examples are shown below.

Example 1. 99 + 89 = 188

Instruction	A Register	CY Flag	AC Flag	BCDADJ Register
`MOV A, #99H ; <1>`	99H	–	–	–
`ADD A, #89H ; <2>`	22H	1	1	66H
`ADD A, !BCDADJ ; <3>`	88H	1	0	–

Example 2. 85 + 15 = 100

Instruction	A Register	CY Flag	AC Flag	BCDADJ Register
`MOV A, #85H ; <1>`	85H	–	–	–
`ADD A, #15H ; <2>`	9AH	0	0	66H
`ADD A, !BCDADJ ; <3>`	00H	1	1	–

Examples 3. 80 + 80 = 160

Instruction	A Register	CY Flag	AC Flag	BCDADJ Register
`MOV A, #80H ; <1>`	80H	–	–	–
`ADD A, #80H ; <2>`	00H	1	0	60H
`ADD A, !BCDADJ ; <3>`	60H	1	0	–

(2) Subtraction: Calculating the result of subtracting a BCD code value from another BCD code value by using a BCD code value

<1> The BCD code value from which subtraction is performed is stored in the A register.

<2> By subtracting the value of the second operand (value of BCD code to be subtracted) from the A register as is in binary, the calculation result in binary is stored in the A register, and the correction value is stored in the BCD correction result register (BCDADJ).

<3> Decimal correction is performed by subtracting the value of the BCDADJ register (correction value) from the A register (subtraction result in binary) in binary, and the correction result is stored in the A register and CY flag.

Caution The value read from the BCDADJ register varies depending on the value of the A register when it is read and those of the CY and AC flags. Therefore, execute the instruction <3> after the instruction <2> instead of executing any other instructions. To perform BCD correction in the interrupt enabled state, saving and restoring the A register is required within the interrupt function. PSW (CY flag and AC flag) is restored by the RETI instruction.

An example is shown below.

Example. 91 – 52 = 39

Instruction	A Register	CY Flag	AC Flag	BCDADJ Register
`MOV A, #91H ; <1>`	91H	–	–	–
`SUB A, #52H ; <2>`	3FH	0	1	06H
`SUB A, !BCDADJ ; <3>`	39H	0	0	–

CHAPTER 29 INSTRUCTION SET

This chapter lists the instructions in the RL78 microcontroller instruction set. For details of each operation and operation code, refer to the separate document **RL78 Microcontrollers User's Manual: software (R01US0015)**.

29.1 Conventions Used in Operation List

29.1.1 Operand identifiers and specification methods

Operands are described in the "Operand" column of each instruction in accordance with the description method of the instruction operand identifier (refer to the assembler specifications for details). When there are two or more description methods, select one of them. Alphabetic letters in capitals and the symbols, #, !, !!, $, $!, [ ], and ES: are keywords and are described as they are. Each symbol has the following meaning.

#: Immediate data specification
!: 16-bit absolute address specification
!!: 20-bit absolute address specification
$: 8-bit relative address specification
$!: 16-bit relative address specification
[ ]: Indirect address specification
ES: Extension address specification

In the case of immediate data, describe an appropriate numeric value or a label. When using a label, be sure to describe the #, !, !!, $, $!, [ ], and ES: symbols.

For operand register identifiers, r and rp, either function names (X, A, C, etc.) or absolute names (names in parentheses in the table below, R0, R1, R2, etc.) can be used for description.

Table 29-1. Operand Identifiers and Specification Methods

Identifier	Description Method
r	X (R0), A (R1), C (R2), B (R3), E (R4), D (R5), L (R6), H (R7)
rp	AX (RP0), BC (RP1), DE (RP2), HL (RP3)
sfr	Special-function register symbol (SFR symbol) FFF00H to FFFFFH
sfrp	Special-function register symbols (16-bit manipulatable SFR symbol. Even addresses only[Note]) FFF00H to FFFFFH
saddr	FFE20H to FFF1FH Immediate data or labels
saddrp	FFE20H to FF1FH Immediate data or labels (even addresses only[Note])
addr20	00000H to FFFFFH Immediate data or labels
addr16	0000H to FFFFH Immediate data or labels (only even addresses for 16-bit data transfer instructions[Note])
addr5	0080H to 00BFH Immediate data or labels (even addresses only)
word	16-bit immediate data or label
byte	8-bit immediate data or label
bit	3-bit immediate data or label
RBn	RB0 to RB3

Note Bit 0 = 0 when an odd address is specified.

Remark The special function registers can be described to operand sfr as symbols. See **Table 4-5 SFR List** for the symbols of the special function registers. The extended special function registers can be described to operand !addr16 as symbols. See **Table 4-6 Extended SFR (2nd SFR) List** for the symbols of the extended special function registers.

29.1.2 Description of operation column

The operation when the instruction is executed is shown in the “Operation” column using the following symbols.

Table 29-2. Symbols in “Operation” Column

Symbol	Function
A	A register; 8-bit accumulator
X	X register
B	B register
C	C register
D	D register
E	E register
H	H register
L	L register
ES	ES register
CS	CS register
AX	AX register pair; 16-bit accumulator
BC	BC register pair
DE	DE register pair
HL	HL register pair
PC	Program counter
SP	Stack pointer
PSW	Program status word
CY	Carry flag
AC	Auxiliary carry flag
Z	Zero flag
RBS	Register bank select flag
IE	Interrupt request enable flag
()	Memory contents indicated by address or register contents in parentheses
X_H, X_L X_S, X_H, X_L	16-bit registers: X_H = higher 8 bits, X_L = lower 8 bits 20-bit registers: X_S = (bits 19 to 16), X_H = (bits 15 to 8), X_L = (bits 7 to 0)
∧	Logical product (AND)
∨	Logical sum (OR)
$\underline{\vee}$	Exclusive logical sum (exclusive OR)
¯	Inverted data
addr5	16-bit immediate data (even addresses only in 0080H to 00BFH)
addr16	16-bit immediate data
addr20	20-bit immediate data
jdisp8	Signed 8-bit data (displacement value)
jdisp16	Signed 16-bit data (displacement value)

29.1.3 Description of flag operation column

The change of the flag value when the instruction is executed is shown in the “Flag” column using the following symbols.

Table 29-3. Symbols in “Flag” Column

Symbol	Change of Flag Value
(Blank)	Unchanged
0	Cleared to 0
1	Set to 1
×	Set/cleared according to the result
R	Previously saved value is restored

29.1.4 PREFIX instruction

Instructions with “ES:” have a PREFIX operation code as a prefix to extend the accessible data area to the 1 MB space (00000H to FFFFFH), by adding the ES register value to the 64 KB space from F0000H to FFFFFH. When a PREFIX operation code is attached as a prefix to the target instruction, only one instruction immediately after the PREFIX operation code is executed as the addresses with the ES register value added.

A interrupt and DMA transfer are not acknowledged between a PREFIX instruction code and the instruction immediately after.

Table 29-4. Use Example of PREFIX Operation Code

Instruction	Opcode				
	1	2	3	4	5
MOV !addr16, #byte	CFH	!addr16		#byte	–
MOV ES:!addr16, #byte	11H	CFH	!addr16		#byte
MOV A, [HL]	8BH	–	–	–	–
MOV A, ES:[HL]	11H	8BH	–	–	–

Caution Set the ES register value with MOV ES, A, etc., before executing the PREFIX instruction.

29.2 Operation List

Table 29-5. Operation List (1/17)

Instruction Group	Mnemonic	Operands	Bytes	Clocks		Operation	Flag		
				Note 1	**Note 2**		Z	AC	CY
8-bit data transfer	MOV	r, #byte	2	1	–	r ← byte			
		PSW, #byte	3	3	–	PSW ← byte	×	×	×
		CS, #byte	3	1	–	CS ← byte			
		ES, #byte	2	1	–	ES ← byte			
		!addr16, #byte	4	1	–	(addr16) ← byte			
		ES:!addr16, #byte	5	2	–	(ES, addr16) ← byte			
		saddr, #byte	3	1	–	(saddr) ← byte			
		sfr, #byte	3	1	–	sfr ← byte			
		[DE+byte], #byte	3	1	–	(DE+byte) ← byte			
		ES:[DE+byte],#byte	4	2	–	((ES, DE)+byte) ← byte			
		[HL+byte], #byte	3	1	–	(HL+byte) ← byte			
		ES:[HL+byte],#byte	4	2	–	((ES, HL)+byte) ← byte			
		[SP+byte], #byte	3	1	–	(SP+byte) ← byte			
		word[B], #byte	4	1	–	(B+word) ← byte			
		ES:word[B], #byte	5	2	–	((ES, B)+word) ← byte			
		word[C], #byte	4	1	–	(C+word) ← byte			
		ES:word[C], #byte	5	2	–	((ES, C)+word) ← byte			
		word[BC], #byte	4	1	–	(BC+word) ← byte			
		ES:word[BC], #byte	5	2	–	((ES, BC)+word) ← byte			
		A, r Note 3	1	1	–	A ← r			
		r, A Note 3	1	1	–	r ← A			
		A, PSW	2	1	–	A ← PSW			
		PSW, A	2	3	–	PSW ← A	×	×	×
		A, CS	2	1	–	A ← CS			
		CS, A	2	1	–	CS ← A			
		A, ES	2	1	–	A ← ES			
		ES, A	2	1	–	ES ← A			
		A, !addr16	3	1	4	A ← (addr16)			
		A, ES:!addr16	4	2	5	A ← (ES, addr16)			
		!addr16, A	3	1	–	(addr16) ← A			
		ES:!addr16, A	4	2	–	(ES, addr16) ← A			
		A, saddr	2	1	–	A ← (saddr)			
		saddr, A	2	1	–	(saddr) ← A			

Notes 1. Number of CPU clocks (f_{CLK}) when the internal RAM area, SFR area, or extended SFR area is accessed, or when no data is accessed.

2. Number of CPU clocks (f_{CLK}) when the code flash memory is accessed, or when the data flash memory is accessed by an 8-bit instruction.

3. Except r = A

Remark Number of clock is when program exists in the internal ROM (flash memory) area. If fetching the instruction from the internal RAM area, the number becomes double number plus 3 clocks at a maximum.

Table 29-5. Operation List (2/17)

Instruction Group	Mnemonic	Operands	Bytes	Clocks		Operation	Flag		
				Note 1	**Note 2**		Z	AC	CY
8-bit data transfer	MOV	A, sfr	2	1	–	A ← sfr			
		sfr, A	2	1	–	sfr ← A			
		A, [DE]	1	1	4	A ← (DE)			
		[DE], A	1	1	–	(DE) ← A			
		A, ES:[DE]	2	2	5	A ← (ES, DE)			
		ES:[DE], A	2	2	–	(ES, DE) ← A			
		A, [HL]	1	1	4	A ← (HL)			
		[HL], A	1	1	–	(HL) ← A			
		A, ES:[HL]	2	2	5	A ← (ES, HL)			
		ES:[HL], A	2	2	–	(ES, HL) ← A			
		A, [DE+byte]	2	1	4	A ← (DE + byte)			
		[DE+byte], A	2	1	–	(DE + byte) ← A			
		A, ES:[DE+byte]	3	2	5	A ← ((ES, DE) + byte)			
		ES:[DE+byte], A	3	2	–	((ES, DE) + byte) ← A			
		A, [HL+byte]	2	1	4	A ← (HL + byte)			
		[HL+byte], A	2	1	–	(HL + byte) ← A			
		A, ES:[HL+byte]	3	2	5	A ← ((ES, HL) + byte)			
		ES:[HL+byte], A	3	2	–	((ES, HL) + byte) ← A			
		A, [SP+byte]	2	1	–	A ← (SP + byte)			
		[SP+byte], A	2	1	–	(SP + byte) ← A			
		A, word[B]	3	1	4	A ← (B + word)			
		word[B], A	3	1	–	(B + word) ← A			
		A, ES:word[B]	4	2	5	A ← ((ES, B) + word)			
		ES:word[B], A	4	2	–	((ES, B) + word) ← A			
		A, word[C]	3	1	4	A ← (C + word)			
		word[C], A	3	1	–	(C + word) ← A			
		A, ES:word[C]	4	2	5	A ← ((ES, C) + word)			
		ES:word[C], A	4	2	–	((ES, C) + word) ← A			
		A, word[BC]	3	1	4	A ← (BC + word)			
		word[BC], A	3	1	–	(BC + word) ← A			
		A, ES:word[BC]	4	2	5	A ← ((ES, BC) + word)			
		ES:word[BC], A	4	2	–	((ES, BC) + word) ← A			

Notes 1. Number of CPU clocks (f_{CLK}) when the internal RAM area, SFR area, or extended SFR area is accessed, or when no data is accessed.

2. Number of CPU clocks (f_{CLK}) when the code flash memory is accessed, or when the data flash memory is accessed by an 8-bit instruction.

Remark Number of clock is when program exists in the internal ROM (flash memory) area. If fetching the instruction from the internal RAM area, the number becomes double number plus 3 clocks at a maximum.

Table 29-5. Operation List (3/17)

Instruction Group	Mnemonic	Operands	Bytes	Clocks		Operation	Flag		
				Note 1	**Note 2**		Z	AC	CY
8-bit data transfer	MOV	A, [HL+B]	2	1	4	A ← (HL + B)			
		[HL+B], A	2	1	–	(HL + B) ← A			
		A, ES:[HL+B]	3	2	5	A ← ((ES, HL) + B)			
		ES:[HL+B], A	3	2	–	((ES, HL) + B) ← A			
		A, [HL+C]	2	1	4	A ← (HL + C)			
		[HL+C], A	2	1	–	(HL + C) ← A			
		A, ES:[HL+C]	3	2	5	A ← ((ES, HL) + C)			
		ES:[HL+C], A	3	2	–	((ES, HL) + C) ← A			
		X, !addr16	3	1	4	X ← (addr16)			
		X, ES:!addr16	4	2	5	X ← (ES, addr16)			
		X, saddr	2	1	–	X ← (saddr)			
		B, !addr16	3	1	4	B ← (addr16)			
		B, ES:!addr16	4	2	5	B ← (ES, addr16)			
		B, saddr	2	1	–	B ← (saddr)			
		C, !addr16	3	1	4	C ← (addr16)			
		C, saddr	2	1	–	C ← (saddr)			
		ES, saddr	3	1	–	ES ← (saddr)			
	XCH	A, r Note 3	1 (r = X) 2 (other than r = X)	1	–	A ←→ r			
		A, !addr16	4	2	–	A ←→ (addr16)			
		A, ES:!addr16	5	3	–	A ←→ (ES, addr16)			
		A, saddr	3	2	–	A ←→ (saddr)			
		A, sfr	3	2	–	A ←→ sfr			
		A, [DE]	2	2	–	A ←→ (DE)			
		A, ES:[DE]	3	3	–	A ←→ (ES, DE)			
		A, [HL]	2	2	–	A ←→ (HL)			
		A, ES:[HL]	3	3	–	A ←→ (ES, HL)			
		A, [DE+byte]	3	2	–	A ←→ (DE + byte)			
		A, ES:[DE+byte]	4	3	–	A ←→ ((ES, DE) + byte)			
		A, [HL+byte]	3	2	–	A ←→ (HL + byte)			
		A, ES:[HL+byte]	4	3	–	A ←→ ((ES, HL) + byte)			

Notes 1. Number of CPU clocks (f_{CLK}) when the internal RAM area, SFR area, or extended SFR area is accessed, or when no data is accessed.

2. Number of CPU clocks (f_{CLK}) when the code flash memory is accessed, or when the data flash memory is accessed by an 8-bit instruction.

3. Except r = A

Remark Number of clock is when program exists in the internal ROM (flash memory) area. If fetching the instruction from the internal RAM area, the number becomes double number plus 3 clocks at a maximum.

Table 29-5. Operation List (4/17)

Instruction Group	Mnemonic	Operands	Bytes	Clocks		Operation	Flag		
				Note 1	**Note 2**		Z	AC	CY
8-bit data transfer	XCH	A, [HL+B]	2	2	–	A ←→ (HL+B)			
		A, ES:[HL+B]	3	3	–	A ←→ ((ES, HL)+B)			
		A, [HL+C]	2	2	–	A ←→ (HL+C)			
		A, ES:[HL+C]	3	3	–	A ←→ ((ES, HL)+C)			
	ONEB	A	1	1	–	A ← 01H			
		X	1	1	–	X ← 01H			
		B	1	1	–	B ← 01H			
		C	1	1	–	C ← 01H			
		!addr16	3	1	–	(addr16) ← 01H			
		ES:!addr16	4	2	–	(ES, addr16) ← 01H			
		saddr	2	1	–	(saddr) ← 01H			
	CLRB	A	1	1	–	A ← 00H			
		B	1	1	–	B ← 00H			
		C	1	1	–	C ← 00H			
		!addr16	3	1	–	(addr16) ← 00H			
		ES:!addr16	4	2	–	(ES,addr16) ← 00H			
		saddr	2	1	–	(saddr) ← 00H			
	MOVS	[HL+byte], X	3	1	–	(HL+byte) ← X	×		×
		ES:[HL+byte], X	4	2	–	(ES, HL+byte) ← X	×		×
16-bit data transfer	MOVW	rp, #word	3	1	–	rp ← word			
		saddrp, #word	4	1	–	(saddrp) ← word			
		sfrp, #word	4	1	–	sfrp ← word			
		AX, rp Note 3	1	1	–	AX ← rp			
		rp, AX Note 3	1	1	–	rp ← AX			
		AX, !addr16	3	1	4	AX ← (addr16)			
		!addr16, AX	3	1	–	(addr16) ← AX			
		AX, ES:!addr16	4	2	5	AX ← (ES, addr16)			
		ES:!addr16, AX	4	2	–	(ES, addr16) ← AX			
		AX, saddrp	2	1	–	AX ← (saddrp)			
		saddrp, AX	2	1	–	(saddrp) ← AX			
		AX, sfrp	2	1	–	AX ← sfrp			
		sfrp, AX	2	1	–	sfrp ← AX			

Notes 1. Number of CPU clocks (f_{CLK}) when the internal RAM area, SFR area, or extended SFR area is accessed, or when no data is accessed.

2. Number of CPU clocks (f_{CLK}) when the code flash memory is accessed, or when the data flash memory is accessed by an 8-bit instruction.

3. Except rp = AX

Remark Number of clock is when program exists in the internal ROM (flash memory) area. If fetching the instruction from the internal RAM area, the number becomes double number plus 3 clocks at a maximum.

Table 29-5. Operation List (5/17)

Instruction Group	Mnemonic	Operands	Bytes	Clocks		Operation	Flag		
				Note 1	**Note 2**		Z	AC	CY
16-bit data transfer	MOVW	AX, [DE]	1	1	4	AX ← (DE)			
		[DE], AX	1	1	–	(DE) ← AX			
		AX, ES:[DE]	2	2	5	AX ← (ES, DE)			
		ES:[DE], AX	2	2	–	(ES, DE) ← AX			
		AX, [HL]	1	1	4	AX ← (HL)			
		[HL], AX	1	1	–	(HL) ← AX			
		AX, ES:[HL]	2	2	5	AX ← (ES, HL)			
		ES:[HL], AX	2	2	–	(ES, HL) ← AX			
		AX, [DE+byte]	2	1	4	AX ← (DE+byte)			
		[DE+byte], AX	2	1	–	(DE+byte) ← AX			
		AX, ES:[DE+byte]	3	2	5	AX ← ((ES, DE) + byte)			
		ES:[DE+byte], AX	3	2	–	((ES, DE) + byte) ← AX			
		AX, [HL+byte]	2	1	4	AX ← (HL + byte)			
		[HL+byte], AX	2	1	–	(HL + byte) ← AX			
		AX, ES:[HL+byte]	3	2	5	AX ← ((ES, HL) + byte)			
		ES:[HL+byte], AX	3	2	–	((ES, HL) + byte) ← AX			
		AX, [SP+byte]	2	1	–	AX ← (SP + byte)			
		[SP+byte], AX	2	1	–	(SP + byte) ← AX			
		AX, word[B]	3	1	4	AX ← (B + word)			
		word[B], AX	3	1	–	(B+ word) ← AX			
		AX, ES:word[B]	4	2	5	AX ← ((ES, B) + word)			
		ES:word[B], AX	4	2	–	((ES, B) + word) ← AX			
		AX, word[C]	3	1	4	AX ← (C + word)			
		word[C], AX	3	1	–	(C + word) ← AX			
		AX, ES:word[C]	4	2	5	AX ← ((ES, C) + word)			
		ES:word[C], AX	4	2	–	((ES, C) + word) ← AX			
		AX, word[BC]	3	1	4	AX ← (BC + word)			
		word[BC], AX	3	1	–	(BC + word) ← AX			
		AX, ES:word[BC]	4	2	5	AX ← ((ES, BC) + word)			
		ES:word[BC], AX	4	2	–	((ES, BC) + word) ← AX			

Notes 1. Number of CPU clocks (f_{CLK}) when the internal RAM area, SFR area, or extended SFR area is accessed, or when no data is accessed.

2. Number of CPU clocks (f_{CLK}) when the code flash memory is accessed, or when the data flash memory is accessed by an 8-bit instruction.

Remark Number of clock is when program exists in the internal ROM (flash memory) area. If fetching the instruction from the internal RAM area, the number becomes double number plus 3 clocks at a maximum.

Table 29-5. Operation List (6/17)

Instruction Group	Mnemonic	Operands	Bytes	Clocks		Operation	Flag		
				Note 1	**Note 2**		Z	AC	CY
16-bit data transfer	MOVW	BC, !addr16	3	1	4	BC ← (addr16)			
		BC, ES:!addr16	4	2	5	BC ← (ES, addr16)			
		DE, !addr16	3	1	4	DE ← (addr16)			
		DE, ES:!addr16	4	2	5	DE ← (ES, addr16)			
		HL, !addr16	3	1	4	HL ← (addr16)			
		HL, ES:!addr16	4	2	5	HL ← (ES, addr16)			
		BC, saddrp	2	1	–	BC ← (saddrp)			
		DE, saddrp	2	1	–	DE ← (saddrp)			
		HL, saddrp	2	1	–	HL ← (saddrp)			
	XCHW	AX, rp Note 3	1	1	–	AX ← rp			
	ONEW	AX	1	1	–	AX ← 0001H			
		BC	1	1	–	BC ← 0001H			
	CLRW	AX	1	1	–	AX ← 0000H			
		BC	1	1	–	BC ← 0000H			
8-bit operation	ADD	A, #byte	2	1	–	A, CY ← A + byte	×	×	×
		saddr, #byte	3	2	–	(saddr), CY ← (saddr)+byte	×	×	×
		A, r Note 4	2	1	–	A, CY ← A + r	×	×	×
		r, A	2	1	–	r, CY ← r + A	×	×	×
		A, !addr16	3	1	4	A, CY ← A + (addr16)	×	×	×
		A, ES:!addr16	4	2	5	A, CY ← A + (ES, addr16)	×	×	×
		A, saddr	2	1	–	A, CY ← A + (saddr)	×	×	×
		A, [HL]	1	1	4	A, CY ← A+ (HL)	×	×	×
		A, ES:[HL]	2	2	5	A,CY ← A + (ES, HL)	×	×	×
		A, [HL+byte]	2	1	4	A, CY ← A + (HL+byte)	×	×	×
		A, ES:[HL+byte]	3	2	5	A,CY ← A + ((ES, HL)+byte)	×	×	×
		A, [HL+B]	2	1	4	A, CY ← A + (HL+B)	×	×	×
		A, ES:[HL+B]	3	2	5	A,CY ← A+((ES, HL)+B)	×	×	×
		A, [HL+C]	2	1	4	A, CY ← A + (HL+C)	×	×	×
		A, ES:[HL+C]	3	2	5	A,CY ← A + ((ES, HL) + C)	×	×	×

Notes 1. Number of CPU clocks (f_{CLK}) when the internal RAM area, SFR area, or extended SFR area is accessed, or when no data is accessed.

2. Number of CPU clocks (f_{CLK}) when the code flash memory is accessed, or when the data flash memory is accessed by an 8-bit instruction.

3. Except rp = AX

4. Except r = A

Remark Number of clock is when program exists in the internal ROM (flash memory) area. If fetching the instruction from the internal RAM area, the number becomes double number plus 3 clocks at a maximum.

Table 29-5. Operation List (7/17)

Instruction Group	Mnemonic	Operands	Bytes	Clocks		Operation	Flag		
				Note 1	**Note 2**		Z	AC	CY
8-bit operation	ADDC	A, #byte	2	1	–	A, CY ← A+byte+CY	×	×	×
		saddr, #byte	3	2	–	(saddr), CY ← (saddr) +byte+CY	×	×	×
		A, rv Note 3	2	1	–	A, CY ← A + r + CY	×	×	×
		r, A	2	1	–	r, CY ← r + A + CY	×	×	×
		A, !addr16	3	1	4	A, CY ← A + (addr16)+CY	×	×	×
		A, ES:!addr16	4	2	5	A, CY ← A + (ES, addr16)+CY	×	×	×
		A, saddr	2	1	–	A, CY ← A + (saddr)+CY	×	×	×
		A, [HL]	1	1	4	A, CY ← A+ (HL) + CY	×	×	×
		A, ES:[HL]	2	2	5	A,CY ← A+ (ES, HL) + CY	×	×	×
		A, [HL+byte]	2	1	4	A, CY ← A+ (HL+byte) + CY	×	×	×
		A, ES:[HL+byte]	3	2	5	A,CY ← A+ ((ES, HL)+byte) + CY	×	×	×
		A, [HL+B]	2	1	4	A, CY ← A+ (HL+B) +CY	×	×	×
		A, ES:[HL+B]	3	2	5	A,CY ← A+((ES, HL)+B)+CY	×	×	×
		A, [HL+C]	2	1	4	A, CY ← A+ (HL+C)+CY	×	×	×
		A, ES:[HL+C]	3	2	5	A,CY ← A+ ((ES, HL)+C)+CY	×	×	×
	SUB	A, #byte	2	1	–	A, CY ← A – byte	×	×	×
		saddr, #byte	3	2	–	(saddr), CY ← (saddr) – byte	×	×	×
		A, r Note 3	2	1	–	A, CY ← A – r	×	×	×
		r, A	2	1	–	r, CY ← r – A	×	×	×
		A, !addr16	3	1	4	A, CY ← A – (addr16)	×	×	×
		A, ES:!addr16	4	2	5	A, CY ← A – (ES, addr16)	×	×	×
		A, saddr	2	1	–	A, CY ← A – (saddr)	×	×	×
		A, [HL]	1	1	4	A, CY ← A – (HL)	×	×	×
		A, ES:[HL]	2	2	5	A,CY ← A – (ES, HL)	×	×	×
		A, [HL+byte]	2	1	4	A, CY ← A – (HL+byte)	×	×	×
		A, ES:[HL+byte]	3	2	5	A,CY ← A – ((ES, HL)+byte)	×	×	×
		A, [HL+B]	2	1	4	A, CY ← A – (HL+B)	×	×	×
		A, ES:[HL+B]	3	2	5	A,CY ← A – ((ES, HL)+B)	×	×	×
		A, [HL+C]	2	1	4	A, CY ← A – (HL+C)	×	×	×
		A, ES:[HL+C]	3	2	5	A,CY ← A – ((ES, HL)+C)	×	×	×

Notes 1. Number of CPU clocks (f_{CLK}) when the internal RAM area, SFR area, or extended SFR area is accessed, or when no data is accessed.

2. Number of CPU clocks (f_{CLK}) when the code flash memory is accessed, or when the data flash memory is accessed by an 8-bit instruction.

3. Except r = A

Remark Number of clock is when program exists in the internal ROM (flash memory) area. If fetching the instruction from the internal RAM area, the number becomes double number plus 3 clocks at a maximum.

Table 29-5. Operation List (8/17)

Instruction Group	Mnemonic	Operands	Bytes	Clocks		Operation	Flag		
				Note 1	**Note 2**		Z	AC	CY
8-bit operation	SUBC	A, #byte	2	1	–	A, CY ← A – byte – CY	×	×	×
		saddr, #byte	3	2	–	(saddr), CY ← (saddr) – byte – CY	×	×	×
		A, r Note 3	2	1	–	A, CY ← A – r – CY	×	×	×
		r, A	2	1	–	r, CY ← r – A – CY	×	×	×
		A, !addr16	3	1	4	A, CY ← A – (addr16) – CY	×	×	×
		A, ES:!addr16	4	2	5	A, CY ← A – (ES, addr16) – CY	×	×	×
		A, saddr	2	1	–	A, CY ← A – (saddr) – CY	×	×	×
		A, [HL]	1	1	4	A, CY ← A – (HL) – CY	×	×	×
		A, ES:[HL]	2	2	5	A,CY ← A – (ES, HL) – CY	×	×	×
		A, [HL+byte]	2	1	4	A, CY ← A – (HL+byte) – CY	×	×	×
		A, ES:[HL+byte]	3	2	5	A,CY ← A – ((ES, HL)+byte) – CY	×	×	×
		A, [HL+B]	2	1	4	A, CY ← A – (HL+B) – CY	×	×	×
		A, ES:[HL+B]	3	2	5	A,CY ← A – ((ES, HL)+B) – CY	×	×	×
		A, [HL+C]	2	1	4	A, CY ← A – (HL+C) – CY	×	×	×
		A, ES:[HL+C]	3	2	5	A, CY ← A – ((ES:HL)+C) – CY	×	×	×
	AND	A, #byte	2	1	–	A ← A ∧ byte	×		
		saddr, #byte	3	2	–	(saddr) ← (saddr) ∧ byte	×		
		A, r Note 3	2	1	–	A ← A ∧ r	×		
		r, A	2	1	–	R ← r ∧ A	×		
		A, !addr16	3	1	4	A ← A ∧ (addr16)	×		
		A, ES:!addr16	4	2	5	A ← A ∧ (ES:addr16)	×		
		A, saddr	2	1	–	A ← A ∧ (saddr)	×		
		A, [HL]	1	1	4	A ← A ∧ (HL)	×		
		A, ES:[HL]	2	2	5	A ← A ∧ (ES:HL)	×		
		A, [HL+byte]	2	1	4	A ← A ∧ (HL+byte)	×		
		A, ES:[HL+byte]	3	2	5	A ← A ∧ ((ES:HL)+byte)	×		
		A, [HL+B]	2	1	4	A ← A ∧ (HL+B)	×		
		A, ES:[HL+B]	3	2	5	A ← A ∧ ((ES:HL)+B)	×		
		A, [HL+C]	2	1	4	A ← A ∧ (HL+C)	×		
		A, ES:[HL+C]	3	2	5	A ← A ∧ ((ES:HL)+C)	×		

Notes 1. Number of CPU clocks (f_{CLK}) when the internal RAM area, SFR area, or extended SFR area is accessed, or when no data is accessed.

2. Number of CPU clocks (f_{CLK}) when the code flash memory is accessed, or when the data flash memory is accessed by an 8-bit instruction.

3. Except r = A

Remark Number of clock is when program exists in the internal ROM (flash memory) area. If fetching the instruction from the internal RAM area, the number becomes double number plus 3 clocks at a maximum.

Table 29-5. Operation List (9/17)

Instruction Group	Mnemonic	Operands	Bytes	Clocks		Operation	Flag		
				Note 1	**Note 2**		Z	AC	CY
8-bit operation	OR	A, #byte	2	1	–	A ← Abyte	×		
		saddr, #byte	3	2	–	(saddr) ← (saddr)byte	×		
		A, r Note 3	2	1	–	A ← Av r	×		
		r, A	2	1	–	r ← rv A	×		
		A, !addr16	3	1	4	A ← Av (addr16)	×		
		A, ES:!addr16	4	2	5	A ← Av (ES:addr16)	×		
		A, saddr	2	1	–	A ← Av (saddr)	×		
		A, [HL]	1	1	4	A ← Av (H)	×		
		A, ES:[HL]	2	2	5	A ← Av (ES:HL)	×		
		A, [HL+byte]	2	1	4	A ← Av (HL+byte)	×		
		A, ES:[HL+byte]	3	2	5	A ← Av ((ES:HL)+byte)	×		
		A, [HL+B]	2	1	4	A ← Av (HL+B)	×		
		A, ES:[HL+B]	3	2	5	A ← Av ((ES:HL)+B)	×		
		A, [HL+C]	2	1	4	A ← Av (HL+C)	×		
		A, ES:[HL+C]	3	2	5	A ← Av ((ES:HL)+C)	×		
	XOR	A, #byte	2	1	–	A ← A⊻ byte	×		
		saddr, #byte	3	2	–	(saddr) ← (saddr)⊻ byte	×		
		A, r Note 3	2	1	–	A ← A⊻ r	×		
		r, A	2	1	–	r ← r⊻ A	×		
		A, !addr16	3	1	4	A ← A⊻ (addr16)	×		
		A, ES:!addr16	4	2	5	A ← A⊻ (ES:addr16)	×		
		A, saddr	2	1	–	A ← A⊻ (saddr)	×		
		A, [HL]	1	1	4	A ← A⊻ (HL)	×		
		A, ES:[HL]	2	2	5	A ← A⊻ (ES:HL)	×		
		A, [HL+byte]	2	1	4	A ← A⊻ (HL+byte)	×		
		A, ES:[HL+byte]	3	2	5	A ← A⊻ ((ES:HL)+byte)	×		
		A, [HL+B]	2	1	4	A ← A⊻ (HL+B)	×		
		A, ES:[HL+B]	3	2	5	A ← A⊻ ((ES:HL)+B)	×		
		A, [HL+C]	2	1	4	A ← A⊻ (HL+C)	×		
		A, ES:[HL+C]	3	2	5	A ← A⊻ ((ES:HL)+C)	×		

Notes 1. Number of CPU clocks (f_{CLK}) when the internal RAM area, SFR area, or extended SFR area is accessed, or when no data is accessed.

2. Number of CPU clocks (f_{CLK}) when the code flash memory is accessed, or when the data flash memory is accessed by an 8-bit instruction.

3. Except r = A

Remark Number of clock is when program exists in the internal ROM (flash memory) area. If fetching the instruction from the internal RAM area, the number becomes double number plus 3 clocks at a maximum.

Table 29-5. Operation List (10/17)

Instruction Group	Mnemonic	Operands	Bytes	Clocks		Operation	Flag		
				Note 1	Note 2		Z	AC	CY
8-bit operation	CMP	A, #byte	2	1	–	A – byte	×	×	×
		!addr16, #byte	4	1	4	(addr16) – byte	×	×	×
		ES:!addr16, #byte	5	2	5	(ES:addr16) – byte	×	×	×
		saddr, #byte	3	1	–	(saddr) – byte	×	×	×
		A, r Note3	2	1	–	A – r	×	×	×
		r, A	2	1	–	r – A	×	×	×
		A, !addr16	3	1	4	A – (addr16)	×	×	×
		A, ES:!addr16	4	2	5	A – (ES:addr16)	×	×	×
		A, saddr	2	1	–	A – (saddr)	×	×	×
		A, [HL]	1	1	4	A – (HL)	×	×	×
		A, ES:[HL]	2	2	5	A – (ES:HL)	×	×	×
		A, [HL+byte]	2	1	4	A – (HL+byte)	×	×	×
		A, ES:[HL+byte]	3	2	5	A – ((ES:HL)+byte)	×	×	×
		A, [HL+B]	2	1	4	A – (HL+B)	×	×	×
		A, ES:[HL+B]	3	2	5	A – ((ES:HL)+B)	×	×	×
		A, [HL+C]	2	1	4	A – (HL+C)	×	×	×
		A, ES:[HL+C]	3	2	5	A – ((ES:HL)+C)	×	×	×
	CMP0	A	1	1	–	A – 00H	×	0	0
		X	1	1	–	X – 00H	×	0	0
		B	1	1	–	B – 00H	×	0	0
		C	1	1	–	C – 00H	×	0	0
		!addr16	3	1	4	(addr16) – 00H	×	0	0
		ES:!addr16	4	2	5	(ES:addr16) – 00H	×	0	0
		saddr	2	1	–	(saddr) – 00H	×	0	0
	CMPS	X, [HL+byte]	3	1	4	X – (HL+byte)	×	×	×
		X, ES:[HL+byte]	4	2	5	X – ((ES:HL)+byte)	×	×	×

Notes 1. Number of CPU clocks (f_{CLK}) when the internal RAM area, SFR area, or extended SFR area is accessed, or when no data is accessed.

2. Number of CPU clocks (f_{CLK}) when the code flash memory is accessed, or when the data flash memory is accessed by an 8-bit instruction.

3. Except r = A

Remark Number of clock is when program exists in the internal ROM (flash memory) area. If fetching the instruction from the internal RAM area, the number becomes double number plus 3 clocks at a maximum.

Table 29-5. Operation List (11/17)

Instruction Group	Mnemonic	Operands	Bytes	Clocks		Operation	Flag		
				Note 1	**Note 2**		Z	AC	CY
16-bit operation	ADDW	AX, #word	3	1	–	AX, CY ← AX+word	×	×	×
		AX, AX	1	1	–	AX, CY ← AX+AX	×	×	×
		AX, BC	1	1	–	AX, CY ← AX+BC	×	×	×
		AX, DE	1	1	–	AX, CY ← AX+DE	×	×	×
		AX, HL	1	1	–	AX, CY ← AX+HL	×	×	×
		AX, !addr16	3	1	4	AX, CY ← AX+(addr16)	×	×	×
		AX, ES:!addr16	4	2	5	AX, CY ← AX+(ES:addr16)	×	×	×
		AX, saddrp	2	1	–	AX, CY ← AX+(saddrp)	×	×	×
		AX, [HL+byte]	3	1	4	AX, CY ← AX+(HL+byte)	×	×	×
		AX, ES: [HL+byte]	4	2	5	AX, CY ← AX+((ES:HL)+byte)	×	×	×
	SUBW	AX, #word	3	1	–	AX, CY ← AX – word	×	×	×
		AX, BC	1	1	–	AX, CY ← AX – BC	×	×	×
		AX, DE	1	1	–	AX, CY ← AX – DE	×	×	×
		AX, HL	1	1	–	AX, CY ← AX – HL	×	×	×
		AX, !addr16	3	1	4	AX, CY ← AX – (addr16)	×	×	×
		AX, ES:!addr16	4	2	5	AX, CY ← AX – (ES:addr16)	×	×	×
		AX, saddrp	2	1	–	AX, CY ← AX – (saddrp)	×	×	×
		AX, [HL+byte]	3	1	4	AX, CY ← AX – (HL+byte)	×	×	×
		AX, ES: [HL+byte]	4	2	5	AX, CY ← AX – ((ES:HL)+byte)	×	×	×
	CMPW	AX, #word	3	1	–	AX – word	×	×	×
		AX, BC	1	1	–	AX – BC	×	×	×
		AX, DE	1	1	–	AX – DE	×	×	×
		AX, HL	1	1	–	AX – HL	×	×	×
		AX, !addr16	3	1	4	AX – (addr16)	×	×	×
		AX, ES:!addr16	4	2	5	AX – (ES:addr16)	×	×	×
		AX, saddrp	2	1	–	AX – (saddrp)	×	×	×
		AX, [HL+byte]	3	1	4	AX – (HL+byte)	×	×	×
		AX, ES: [HL+byte]	4	2	5	AX – ((ES:HL)+byte)	×	×	×
Multiply	MULU	X	1	1	–	AX ← A×X			

Notes 1. Number of CPU clocks (f_{CLK}) when the internal RAM area, SFR area, or extended SFR area is accessed, or when no data is accessed.

2. Number of CPU clocks (f_{CLK}) when the code flash memory is accessed, or when the data flash memory is accessed by an 8-bit instruction.

Remark Number of clock is when program exists in the internal ROM (flash memory) area. If fetching the instruction from the internal RAM area, the number becomes double number plus 3 clocks at a maximum.

Table 29-5. Operation List (12/17)

Instruction Group	Mnemonic	Operands	Bytes	Clocks		Operation	Flag		
				Note 1	**Note 2**		Z	AC	CY
Increment/ decrement	INC	r	1	1	–	r ← r+1	×	×	
		!addr16	3	2	–	(addr16) ← (addr16)+1	×	×	
		ES:!addr16	4	3	–	(ES, addr16) ← (ES, addr16)+1	×	×	
		saddr	2	2	–	(saddr) ← (saddr)+1	×	×	
		[HL+byte]	3	2	–	(HL+byte) ← (HL+byte)+1	×	×	
		ES: [HL+byte]	4	3	–	((ES:HL)+byte) ← ((ES:HL)+byte)+1	×	×	
	DEC	r	1	1	–	r ← r – 1	×	×	
		!addr16	3	2	–	(addr16) ← (addr16) – 1	×	×	
		ES:!addr16	4	3	–	(ES, addr16) ← (ES, addr16) – 1	×	×	
		saddr	2	2	–	(saddr) ← (saddr) – 1	×	×	
		[HL+byte]	3	2	–	(HL+byte) ← (HL+byte) – 1	×	×	
		ES: [HL+byte]	4	3	–	((ES:HL)+byte) ← ((ES:HL)+byte) – 1	×	×	
	INCW	rp	1	1	–	rp ← rp+1			
		!addr16	3	2	–	(addr16) ← (addr16)+1			
		ES:!addr16	4	3	–	(ES, addr16) ← (ES, addr16)+1			
		saddrp	2	2	–	(saddrp) ← (saddrp)+1			
		[HL+byte]	3	2	–	(HL+byte) ← (HL+byte)+1			
		ES: [HL+byte]	4	3	–	((ES:HL)+byte) ← ((ES:HL)+byte)+1			
	DECW	rp	1	1	–	rp ← rp – 1			
		!addr16	3	2	–	(addr16) ← (addr16) – 1			
		ES:!addr16	4	3	–	(ES, addr16) ← (ES, addr16) – 1			
		saddrp	2	2	–	(saddrp) ← (saddrp) – 1			
		[HL+byte]	3	2	–	(HL+byte) ← (HL+byte) – 1			
		ES: [HL+byte]	4	3	–	((ES:HL)+byte) ← ((ES:HL)+byte) – 1			
Shift	SHR	A, cnt	2	1	–	(CY ← A_0, A_{m-1} ← A_m, A_7 ← 0) ×cnt			×
	SHRW	AX, cnt	2	1	–	(CY ← AX_0, AX_{m-1} ← AX_m, AX_{15} ← 0) ×cnt			×
	SHL	A, cnt	2	1	–	(CY ← A_7, A_m ← A_{m-1}, A_0 ← 0) ×cnt			×
		B, cnt	2	1	–	(CY ← B_7, B_m ← B_{m-1}, B_0 ← 0) ×cnt			×
		C, cnt	2	1	–	(CY ← C_7, C_m ← C_{m-1}, C_0 ← 0) ×cnt			×
	SHLW	AX, cnt	2	1	–	(CY ← AX_{15}, AX_m ← AX_{m-1}, AX_0 ← 0) ×cnt			×
		BC, cnt	2	1	–	(CY ← BC_{15}, BC_m ← BC_{m-1}, BC_0 ← 0) ×cnt			×
	SAR	A, cnt	2	1	–	(CY ← A_0, A_{m-1} ← A_m, A_7 ← A_7) ×cnt			×
	SARW	AX, cnt	2	1	–	(CY ← AX_0, AX_{m-1} ← AX_m, AX_{15}← AX_{15}) ×cnt			×

Notes 1. Number of CPU clocks (f_{CLK}) when the internal RAM area, SFR area, or extended SFR area is accessed, or when no data is accessed.

2. Number of CPU clocks (f_{CLK}) when the code flash memory is accessed, or when the data flash memory is accessed by an 8-bit instruction.

Remarks 1. Number of clock is when program exists in the internal ROM (flash memory) area. If fetching the instruction from the internal RAM area, the number becomes double number plus 3 clocks at a maximum.

2. cnt indicates the bit shift count.

Table 29-5. Operation List (13/17)

Instruction Group	Mnemonic	Operands	Bytes	Clocks		Operation	Flag		
				Note 1	**Note 2**		Z	AC	CY
Rotate	ROR	A, 1	2	1	–	(CY, $A_7 \leftarrow A_0$, $A_{m-1} \leftarrow A_m$)×1			×
	ROL	A, 1	2	1	–	(CY, $A_0 \leftarrow A_7$, $A_{m+1} \leftarrow A_m$)×1			×
	RORC	A, 1	2	1	–	(CY ← A_0, $A_7 \leftarrow$ CY, $A_{m-1} \leftarrow A_m$)×1			×
	ROLC	A, 1	2	1	–	(CY ← A_7, $A_0 \leftarrow$ CY, $A_{m+1} \leftarrow A_m$)×1			×
	ROLWC	AX,1	2	1	–	(CY ← AX_{15}, $AX_0 \leftarrow$ CY, $AX_{m+1} \leftarrow AX_m$) ×1			×
		BC,1	2	1	–	(CY ← BC_{15}, $BC_0 \leftarrow$ CY, $BC_{m+1} \leftarrow BC_m$) ×1			×
Bit manipulate	MOV1	CY, A.bit	2	1	–	CY ← A.bit			×
		A.bit, CY	2	1	–	A.bit ← CY			
		CY, PSW.bit	3	1	–	CY ← PSW.bit			×
		PSW.bit, CY	3	4	–	PSW.bit ← CY	×	×	
		CY, saddr.bit	3	1	–	CY ← (saddr).bit			×
		saddr.bit, CY	3	2	–	(saddr).bit ← CY			
		CY, sfr.bit	3	1	–	CY ← sfr.bit			×
		sfr.bit, CY	3	2	–	sfr.bit ← CY			
		CY,[HL].bit	2	1	4	CY ← (HL).bit			×
		[HL].bit, CY	2	2	–	(HL).bit ← CY			
		CY, ES:[HL].bit	3	2	5	CY ← (ES, HL).bit			×
		ES:[HL].bit, CY	3	3	–	(ES, HL).bit ← CY			
	AND1	CY, A.bit	2	1	–	CY ← CY ∧ A.bit			×
		CY, PSW.bit	3	1	–	CY ← CY ∧ PSW.bit			×
		CY, saddr.bit	3	1	–	CY ← CY ∧ (saddr).bit			×
		CY, sfr.bit	3	1	–	CY ← CY ∧ sfr.bit			×
		CY,[HL].bit	2	1	4	CY ← CY ∧ (HL).bit			×
		CY, ES:[HL].bit	3	2	5	CY ← CY ∧ (ES, HL).bit			×
	OR1	CY, A.bit	2	1	–	CY ← CY ∨ A.bit			×
		CY, PSW.bit	3	1	–	CY ← CY ∨ PSW.bit			×
		CY, saddr.bit	3	1	–	CY ← CY ∨ (saddr).bit			×
		CY, sfr.bit	3	1	–	CY ← CY ∨ sfr.bit			×
		CY, [HL].bit	2	1	4	CY ← CY ∨ (HL).bit			×
		CY, ES:[HL].bit	3	2	5	CY ← CY ∨ (ES, HL).bit			×

Notes 1. Number of CPU clocks (f_{CLK}) when the internal RAM area, SFR area, or extended SFR area is accessed, or when no data is accessed.

2. Number of CPU clocks (f_{CLK}) when the code flash memory is accessed, or when the data flash memory is accessed by an 8-bit instruction.

Remark Number of clock is when program exists in the internal ROM (flash memory) area. If fetching the instruction from the internal RAM area, the number becomes double number plus 3 clocks at a maximum.

Table 29-5. Operation List (14/17)

Instruction Group	Mnemonic	Operands	Bytes	Clocks		Operation	Flag		
				Note 1	**Note 2**		Z	AC	CY
Bit manipulate	XOR1	CY, A.bit	2	1	–	CY ← CY ⊻ A.bit			×
		CY, saddr.bit	3	1	–	CY ← CY ⊻ (saddr).bit			×
		CY, sfr.bit	3	1	–	CY ← CY ⊻ sfr.bit			×
		CY, [HL].bit	2	1	4	CY ← CY ⊻ (HL).bit			×
		CY, ES:[HL].bit	3	2	5	CY ← CY ⊻ (ES, HL).bit			×
	SET1	A.bit	2	1	–	A.bit ← 1			
		PSW.bit	3	4	–	PSW.bit ← 1	×	×	×
		!addr16.bit	4	2	–	(addr16).bit ← 1			
		ES:!addr16.bit	5	3	–	(ES, addr16).bit ← 1			
		saddr.bit	3	2	–	(saddr).bit ← 1			
		sfr.bit	3	2	–	sfr.bit ← 1			
		[HL].bit	2	2	–	(HL).bit ← 1			
		ES:[HL].bit	3	3	–	(ES, HL).bit ← 1			
	CLR1	A.bit	2	1	–	A.bit ← 0			
		PSW.bit	3	4	–	PSW.bit ← 0	×	×	×
		!addr16.bit	4	2	–	(addr16).bit ← 0			
		ES:!addr16.bit	5	3	–	(ES, addr16).bit ← 0			
		saddr.bit	3	2	–	(saddr.bit) ← 0			
		sfr.bit	3	2	–	sfr.bit ← 0			
		[HL].bit	2	2	–	(HL).bit ← 0			
		ES:[HL].bit	3	3	–	(ES, HL).bit ← 0			
	SET1	CY	2	1	–	CY ← 1			1
	CLR1	CY	2	1	–	CY ← 0			0
	NOT1	CY	2	1	–	CY ← $\overline{CY}$			×

Notes 1. Number of CPU clocks (f_{CLK}) when the internal RAM area, SFR area, or extended SFR area is accessed, or when no data is accessed.

2. Number of CPU clocks (f_{CLK}) when the code flash memory is accessed, or when the data flash memory is accessed by an 8-bit instruction.

Remark Number of clock is when program exists in the internal ROM (flash memory) area. If fetching the instruction from the internal RAM area, the number becomes double number plus 3 clocks at a maximum.

Table 29-5. Operation List (15/17)

Instruction Group	Mnemonic	Operands	Bytes	Clocks		Operation	Flag		
				Note 1	**Note 2**		Z	AC	CY
Call/ return	CALL	rp	2	3	–	(SP – 2) ← $(PC+2)_S$, (SP – 3) ← $(PC+2)_H$, (SP – 4) ← $(PC+2)_L$, PC ← CS, rp, SP ← SP – 4			
		$!addr20	3	3	–	(SP – 2) ← $(PC+3)_S$, (SP – 3) ← $(PC+3)_H$, (SP – 4) ← $(PC+3)_L$, PC ← PC+3+jdisp16, SP ← SP – 4			
		!addr16	3	3	–	(SP – 2) ← $(PC+3)_S$, (SP – 3) ← $(PC+3)_H$, (SP – 4) ← $(PC+3)_L$, PC ← 0000, addr16, SP ← SP – 4			
		!!addr20	4	3	–	(SP – 2) ← $(PC+4)_S$, (SP – 3) ← $(PC+4)_H$, (SP – 4) ← $(PC+4)_L$, PC ← addr20, SP ← SP – 4			
	CALLT	[addr5]	2	5	–	(SP – 2) ← $(PC+2)_S$, (SP – 3) ← $(PC+2)_H$, (SP – 4) ← $(PC+2)_L$, PC_S ← 0000, PC_H ← (0000, addr5+1), PC_L ← (0000, addr5), SP ← SP – 4			
		BRK	–	2	5	(SP – 1) ← PSW, (SP – 2) ← $(PC+2)_S$, (SP – 3) ← $(PC+2)_H$, (SP – 4) ← $(PC+2)_L$, PC_S ← 0000, PC_H ← (0007FH), PC_L ← (0007EH), SP ← SP – 4, IE ← 0			
	RET	-	1	6	–	PC_L ← (SP), PC_H ← (SP+1), PC_S ← (SP+2), SP ← SP+4			
	RETI	-	2	6	–	PC_L ← (SP), PC_H ← (SP+1), PC_S ← (SP+2), PSW← (SP+3), SP ← SP+4	R	R	R
	RETB	-	2	6	–	PC_L ← (SP), PC_H ← (SP+1), PC_S ← (SP+2), PSW ← (SP+3), SP ← SP+4	R	R	R

Notes 1. Number of CPU clocks (f_{CLK}) when the internal RAM area, SFR area, or extended SFR area is accessed, or when no data is accessed.

2. Number of CPU clocks (f_{CLK}) when the code flash memory is accessed, or when the data flash memory is accessed by an 8-bit instruction.

Remark Number of clock is when program exists in the internal ROM (flash memory) area. If fetching the instruction from the internal RAM area, the number becomes double number plus 3 clocks at a maximum.

Table 29-5. Operation List (16/17)

Instruction Group	Mnemonic	Operands	Bytes	Clocks		Operation	Flag		
				Note 1	**Note 2**		Z	AC	CY
Stack manipulate	PUSH	PSW	2	1	–	(SP – 1) ← PSW, (SP – 2) ← 00H			
		rp	1	1	–	(SP – 1) ← rp_H, (SP – 2) ← rp_L, SP ← SP – 2			
	POP	PSW	2	3	–	PSW ← (SP+1), SP ← SP + 2	R	R	R
		rp	1	1	–	rp_L ←(SP), rp_H ← (SP+1), SP ← SP + 2			
	MOVW	SP, #word	4	1	–	SP ← word			
		SP, AX	2	1	–	SP ← AX			
		AX, SP	2	1	–	AX ← SP			
		HL, SP	3	1	–	HL ← SP			
		BC, SP	3	1	–	BC ← SP			
		DE, SP	3	1	–	DE ← SP			
	ADDW	SP, #byte	2	1	–	SP ← SP + byte			
	SUBW	SP, #byte	2	1	–	SP ← SP – byte			
Unconditional branch	BR	AX	2	3	–	PC ← CS, AX			
		$addr20	2	3	–	PC ← PC + 2 + jdisp8			
		$!addr20	3	3	–	PC ← PC + 3 + jdisp16			
		!addr16	3	3	–	PC ← 0000, addr16			
		!!addr20	4	3	–	PC ← addr20			
Conditional branch	BC	$addr20	2	2/4 Note3	–	PC ← PC + 2 + jdisp8 if CY = 1			
	BNC	$addr20	2	2/4 Note3	–	PC ← PC + 2 + jdisp8 if CY = 0			
	BZ	$addr20	2	2/4 Note3	–	PC ← PC + 2 + jdisp8 if Z = 1			
	BNZ	$addr20	2	2/4 Note3	–	PC ← PC + 2 + jdisp8 if Z = 0			
	BH	$addr20	3	2/4 Note3	–	PC ← PC + 3 + jdisp8 if (Zv CY)=0			
	BNH	$addr20	3	2/4 Note3	–	PC ← PC + 3 + jdisp8 if (Zv CY)=1			
	BT	saddr.bit, $addr20	4	3/5 Note3	–	PC ← PC + 4 + jdisp8 if (saddr).bit = 1			
		sfr.bit, $addr20	4	3/5 Note3	–	PC ← PC + 4 + jdisp8 if sfr.bit = 1			
		A.bit, $addr20	3	3/5 Note3	–	PC ← PC + 3 + jdisp8 if A.bit = 1			
		PSW.bit, $addr20	4	3/5 Note3	–	PC ← PC + 4 + jdisp8 if PSW.bit = 1			
		[HL].bit, $addr20	3	3/5 Note3	6/7	PC ← PC + 3 + jdisp8 if (HL).bit = 1			
		ES:[HL].bit, $addr20	4	4/6 Note3	7/8	PC ← PC + 4 + jdisp8			

Notes 1. Number of CPU clocks (f_{CLK}) when the internal RAM area, SFR area, or extended SFR area is accessed, or when no data is accessed.

2. Number of CPU clocks (f_{CLK}) when the code flash memory is accessed, or when the data flash memory is accessed by an 8-bit instruction.

3. This indicates the number of clocks “when condition is not met/when condition is met”.

Remark Number of clock is when program exists in the internal ROM (flash memory) area. If fetching the instruction from the internal RAM area, the number becomes double number plus 3 clocks at a maximum.

Table 29-5. Operation List (17/17)

Instruction Group	Mnemonic	Operands	Bytes	Clocks		Operation	Flag		
				Note 1	**Note 2**		Z	AC	CY
Conditional branch	BF	saddr.bit, $addr20	4	3/5 Note3	–	PC ← PC + 4 + jdisp8 if (saddr).bit = 0			
		sfr.bit, $addr20	4	3/5 Note3	–	PC ← PC + 4 + jdisp8 if sfr.bit = 0			
		A.bit, $addr20	3	3/5 Note3	–	PC ← PC + 3 + jdisp8 if A.bit = 0			
		PSW.bit, $addr20	4	3/5 Note3	–	PC ← PC + 4 + jdisp8 if PSW.bit = 0			
		[HL].bit, $addr20	3	3/5 Note3	6/7	PC ← PC + 3 + jdisp8 if (HL).bit = 0			
		ES:[HL].bit, $addr20	4	4/6 Note3	7/8	PC ← PC + 4 + jdisp8 if (ES, HL).bit = 0			
	BTCLR	saddr.bit, $addr20	4	3/5 Note3	–	PC ← PC + 4 + jdisp8 if (saddr).bit = 1 then reset (saddr).bit			
		$addr20	4	3/5 Note3	–	PC ← PC + 4 + jdisp8 if sfr.bit = 1 then reset sfr.bit			
		$addr20	3	3/5 Note3	–	PC ← PC + 3 + jdisp8 if A.bit = 1 then reset A.bit			
		PSW.bit, $addr20	4	3/5 Note3	–	PC ← PC + 4 + jdisp8 if PSW.bit = 1 then reset PSW.bit	×	×	×
		[HL].bit, $addr20	3	3/5 Note3	–	PC ← PC + 3 + jdisp8 if (HL).bit = 1 then reset (HL).bit			
		ES:[HL].bit, $addr20	4	4/6 Note3	–	PC ← PC + 4 + jdisp8 if (ES, HL).bit = 1 then reset (ES, HL).bit			
Conditional skip	SKC	–	2	1	–	Next instruction skip if CY = 1			
	SKNC	–	2	1	–	Next instruction skip if CY = 0			
	SKZ	–	2	1	–	Next instruction skip if Z = 1			
	SKNZ	–	2	1	–	Next instruction skip if Z = 0			
	SKH	–	2	1	–	Next instruction skip if (Zv CY)=0			
	SKNH	–	2	1	–	Next instruction skip if (Zv CY)=1			
CPU control	SEL Note4	RBn	2	1	–	RBS[1:0] ← n			
	NOP	–	1	1	–	No Operation			
	EI	–	3	4	–	IE ← 1 (Enable Interrupt)			
	DI	–	3	4	–	IE ← 0 (Disable Interrupt)			
	HALT	–	2	3	–	Set HALT Mode			
	STOP	–	2	3	–	Set STOP Mode			

Notes 1. Number of CPU clocks (f_{CLK}) when the internal RAM area, SFR area, or extended SFR area is accessed, or when no data is accessed.

2. Number of CPU clocks (f_{CLK}) when the code flash memory is accessed, or when the data flash memory is accessed by an 8-bit instruction.

3. This indicates the number of clocks “when condition is not met/when condition is met”.

4. n indicates the number of register banks (n = 0 to 3).

Remark Number of clock is when program exists in the internal ROM (flash memory) area. If fetching the instruction from the internal RAM area, the number becomes double number plus 3 clocks at a maximum.

CHAPTER 30 ELECTRICAL SPECIFICATIONS

Caution **The RL78 microcontrollers have an on-chip debug function, which is provided for development and evaluation. Do not use the on-chip debug function in products designated for mass production, because the guaranteed number of rewritable times of the flash memory may be exceeded when this function is used, and product reliability therefore cannot be guaranteed. Renesas Electronics is not liable for problems occurring when the on-chip debug function is used.**

30.1 Absolute Maximum Ratings

Absolute Maximum Ratings (T_A = 25°C) (1/2)

Parameter	Symbols	Conditions	Ratings	Unit
Supply voltage	V_{DD}	V_{DD}	–0.5 to +6.5	V
	V_{DDRF1}	V_{DD_RF}	–0.5 to +4.0	V
	V_{DDRF2}	AV_{DD_RF}	–0.5 to +4.0	V
	V_{DDRF3}	DCLIN	–0.5 to +4.0	V
	V_{SSRF}	V_{SS_RF}, AV_{SS_RF}	–0.5 to +0.3	V
Input voltage	V_{I1}	P00, P01, P02, P03, P10, P11, P12, P14, P15, P16, P20, P21, P22, P23, P30, P40, P120, P121, P122, P123, P124, P137, P140, P147, RESET	–0.3 to V_{DD}+0.3 Note 1	V
	V_{I2}	P60, P61	–0.3 to +6.5	V
	V_{IRF1}	GPIO0, GPIO1, GPIO2, GPIO3	–0.3 to V_{DD_RF}+0.3 Note 2	V
	V_{IRF2}	ANT	–0.5 to +1.4	V
Output voltage	V_O	P00, P01, P02, P03, P10, P11, P12, P14, P15, P16, P20, P21, P22, P23, P30, P40, P60, P61, P120, P130, P140, P147	–0.3 to V_{DD}+0.3 Note 1	V
	V_{ORF}	GPIO0, GPIO1, GPIO2, GPIO3, DCLOUT	–0.3 to V_{DD_RF}+0.3 Note 2	V
Analog input voltage	V_{AI}	ANI0, ANI1, ANI2, ANI3, ANI16, ANI17, ANI18, ANI19	–0.3 to V_{DD}+0.3 and –0.3 to $V_{REF(+)}$+0.3 Notes 2, 4	V
REGC pin input voltage	V_{IREGC}	REGC	–0.3 to +2.8 and –0.3 to V_{DD}+0.3 Note 3	V
IC pin input voltage	V_{IIC}	IC0, IC1	–0.5 to +0.3	V

Notes 1. Must be 6.5 V or lower.

2. Must be 4.0 V or lower.

3. Connect the REGC pin to Vss via a capacitor (0.47 to 1 μF). This value regulates the absolute maximum rating of the REGC pin. Do not use this pin with voltage applied to it.

4. Do not exceed $AV_{REF(+)}$ + 0.3 V in case of A/D conversion target pin.

Caution Product quality may suffer if the absolute maximum rating is exceeded even momentarily for any parameter. That is, the absolute maximum ratings are rated values at which the product is on the verge of suffering physical damage, and therefore the product must be used under conditions that ensure that the absolute maximum ratings are not exceeded.

Remarks 1. Unless specified otherwise, the characteristics of alternate-function pins are the same as those of the port pins.

2. $AV_{REF(+)}$: + side reference voltage of the A/D converter.

3. Reference voltage is V_{SS}.

Absolute Maximum Ratings (T_A = 25°C) (2/2)

Parameter	Symbols	Conditions		Ratings	Unit
Output current, high	I_{OH1}	Per pin	(This is applicable to all pins listed below.)	–40	mA
		Total of all pins –170mA	P00, P01, P02, P03, P40, P120, P130, P140	–70	mA
			P10, P11, P12, P13, P14, P15, P16, P30, P147	–100	mA
	I_{OH2}	Per pin	(This is applicable to all pins listed below.)	–0.5	mA
		Total of all pins	P20, P21, P22, P23	–2	mA
	I_{OHMRF}	Per pin	GPIO0, GPIO1, GPIO2, GPIO3	–17	mA
Output current, low	I_{OL1}	Per pin	(This is applicable to all pins listed below.)	40	mA
		Total of all pins 170mA	P00, P01, P02, P03, P40, P120, P130, P140	70	mA
			P10, P11, P12, P13, P14, P15, P16, P30, P60, P61, P147	100	mA
	I_{OL2}	Per pin	(This is applicable to all pins listed below.)	1	mA
		Total of all pins	P20, P21, P22, P23	5	mA
	I_{OLRF}	Per pin	GPIO0, GPIO1, GPIO2, GPIO3	17	mA
Operating ambient temperature	T_A	In normal operation mode		–40 to +85	°C
		In flash memory programming mode		–40 to +85	°C
Storage temperature	Tstg			–65 to +150	°C

Caution Product quality may suffer if the absolute maximum rating is exceeded even momentarily for any parameter. That is, the absolute maximum ratings are rated values at which the product is on the verge of suffering physical damage, and therefore the product must be used under conditions that ensure that the absolute maximum ratings are not exceeded.

Remarks 1. Unless specified otherwise, the characteristics of alternate-function pins are the same as those of the port pins.

2. $AV_{REF(+)}$: + side reference voltage of the A/D converter.

3. Reference voltage is V_{SS}.

30.2 Operating Voltage

(T_A = –40 to +85°C, V_{DD} = V_{DD_RF} = AV_{DD_RF}, V_{SS} = V_{SS_RF} = AV_{SS_RF} = 0 V)

Clock generator		Flash operation mode	Operation voltage	CPU operation clocks (f_{CLK})[Note 1]
Main system clock (f_{MAIN})	High-speed on-chip oscillator (f_{IH})	HS (high-speed main) mode	2.7 V ≤ V_{DD} ≤ 3.6 V	1 MHz to 32 MHz
			2.4 V ≤ V_{DD} < 2.7 V	1 MHz to 16 MHz
		LS (low-speed main) mode	1.8 V ≤ V_{DD} ≤ 3.6 V	1 MHz to 8 MHz
		LV (low-voltage main) mode[Note 2]	1.6 V ≤ V_{DD} ≤ 3.6 V	1 MHz to 4 MHz
	X1 clock oscillator (f_X)	HS (high-speed main) mode	2.7 V ≤ V_{DD} ≤ 3.6 V	1 MHz to 20 MHz
		LS (low-speed main) mode	1.8 V ≤ V_{DD} ≤ 3.6 V	1 MHz to 8 MHz
		LV (low-voltage main) mode[Note 2]	1.6 V ≤ V_{DD} ≤ 3.6 V	1 MHz to 4 MHz
	External main system clock (f_{EX})	HS (high-speed main) mode	2.7 V ≤ V_{DD} ≤ 3.6 V	1 MHz to 20 MHz
			2.4 V ≤ V_{DD} < 2.7 V	1 MHz to 16 MHz
		LS (low-speed main) mode	1.8 V ≤ V_{DD} ≤ 3.6 V	1 MHz to 8 MHz
		LV (low-voltage main) mode[Note 2]	1.6 V ≤ V_{DD} ≤ 3.6 V	1 MHz to 4 MHz
Subsystem clock (f_{SUB})	XT1 clock oscillator (f_{XT})	–	1.6 V ≤ V_{DD} ≤ 3.6 V	32.768 kHz
	External subsystem clock (f_{EXT})	–	1.6 V ≤ V_{DD} ≤ 3.6 V	32.768 kHz

Notes 1. Indicates only permissible oscillator frequency ranges. Refer to AC Characteristics for instruction execution time.Request evaluation by the manufacturer of the oscillator circuit mounted on a board to check the oscillator characteristics.

2. This mode is prohibited to use in case of using DC-DC converter.

30.3 Oscillator Characteristics

30.3.1 X1, XT1, XRF oscillator characteristics

(T_A = –40 to +85°C, 1.6 V ≤ V_{DD} = V_{DD_RF} = AV_{DD_RF} ≤ 3.6 V, V_{SS} = V_{SS_RF} = AV_{SS_RF} = 0 V)

Parameter		Symbol	Conditions	MIN.	TYP.	MAX.	Unit
X1 clock oscillation frequency[Note 1]	Ceramic resonator Crystal resonator	f_X	2.7 V ≤ V_{DD} ≤ 3.6 V	1		20	MHz
			1.8 V ≤ V_{DD} < 2.7 V	1		8	MHz
			1.6 V ≤ V_{DD} ≤ 1.8 V	1		4	MHz
XT1 clock oscillation frequency[Note 1]		f_{XT}		32	32.768	35	kHz
RF base clock oscillation frequency[Note 2]		f_{XRF}			32		MHz
RF base clock oscillation frequency accuracy[Note 2]		f_{XRFP}		-20		+20	ppm

Notes 1. Indicates only permissible oscillator frequency ranges. Refer to AC Characteristics for instruction execution time.
Request evaluation by the manufacturer of the oscillator circuit mounted on a board to check the oscillator characteristics.

2. This Oscillator characteristics is base clock for RF Transceiver.

Caution Since the CPU is started by the high-speed on-chip oscillator clock after a reset release, check the X1 clock oscillation stabilization time using the oscillation stabilization time counter status register (OSTC) by the user.
Determine the oscillation stabilization time of the OSTC register and the oscillation stabilization time select register (OSTS) after sufficiently evaluating the oscillation stabilization time with the resonator to be used.

Remark When using the X1, XT1 oscillators, refer to **6.4 System Clock Oscillator**.

30.3.2 On-chip oscillator characteristics

(T_A = –40 to +85°C, 1.6 V ≤ V_{DD} = V_{DD_RF} = AV_{DD_RF} ≤ 3.6 V, V_{SS} = V_{SS_RF} = AV_{SS_RF} = 0 V)

Oscillators	Symbol	Conditions		MIN.	TYP.	MAX.	Unit
High-speed on-chip oscillator clock frequency[Notes 1, 2]	f_{IH}			1		32	MHz
High-speed on-chip oscillator clock frequency accuracy	f_{IHP}	–20 to +85°C	1.8 V ≤ V_{DD} ≤3.6 V	-1.5		+1.5.	%
			1.6 V ≤ V_{DD} <1.8 V	-5.0		+5.0	%
		–40 to –20°C	1.8 V ≤ V_{DD} ≤3.6 V	-2.5		+2.5.	%
			1.6 V ≤ V_{DD} <1.8 V	-5.5		+5.5	%
Low-speed on-chip oscillator clock frequency[Notes 3]	f_{IL}				15		kHz
Low-speed on-chip oscillator clock frequency accuracy	f_{ILP}			–15		+15	%
On-chip oscillator clock frequency for the RF slow clock[Note 3]	f_{ILRF}				32.768		kHz
On-chip oscillator clock frequency accuracy for the RF slow clock	f_{ILRFP}			-0.025		0.025	%

Notes 1. High-speed on-chip oscillator frequency is selected by bits 0 to 3 of option byte (000C2H/010C2H) and bits 0 to 2 of HOCODIV register.

2. This indicates the oscillator characteristics only. Refer to **AC Characteristics** for instruction execution time.

3. This indicates the oscillator characteristics only.

30.4 DC Characteristics

30.4.1 Output current

(T_A = –40 to +85°C, 1.6 V ≤ V_{DD} = V_{DD_RF} = AV_{DD_RF} ≤ 3.6 V, V_{SS} = V_{SS_RF} = AV_{SS_RF} = 0 V)

Items	Symbol	Conditions			MIN.	TYP.	MAX.	Unit
Output current, high[Note 1]	I_{OH1}	P00, P01, P02, P03, P10, P11, P12, P13, P14, P15, P16, P30, P40, P120, P130, P140, P147	Per pin	1.6 V ≤ V_{DD} ≤ 3.6 V			–10.0[Note 2]	mA
		P00, P01, P02, P03, P40, P120, P130, P140	Total[Note 3]	2.7 V ≤ V_{DD} ≤ 3.6 V			–10.0	mA
				1.8 V ≤ V_{DD} < 2.7 V			–5.0	mA
				1.6 V ≤ V_{DD} < 1.8 V			–2.5	mA
		P10, P11, P12, P13, P14, P15, P16, P30, P147	Total[Note 3]	2.7 V ≤ V_{DD} ≤ 3.6 V			–19.0	mA
				1.8 V ≤ V_{DD} < 2.7 V			–10.0	mA
				1.6 V ≤ V_{DD} < 1.8 V			–5.0	mA
		Total of all pins[Note 3]		1.6 V ≤ V_{DD} ≤ 3.6 V			–135.0[Note 4]	mA
	I_{OH2}	P20, P21, P22, P23	Per pin	1.6 V ≤ V_{DD} ≤ 3.6 V			–0.1[Note 2]	mA
			Total[Note 3]	1.6 V ≤ V_{DD} ≤ 3.6 V			–1.5	mA
	I_{OHRF}	GPIO0, GPIO1, GPIO2, GPIO3	Per pin	1.6 V ≤ V_{DD_RF} ≤ 3.6 V			–2.0	mA
Output current, low[Note 1]	I_{OL1}	P00, P01, P02, P03, P10, P11, P12, P13, P14, P15, P16, P30, P40, P120, P130, P140, P147	Per pin	1.6 V ≤ V_{DD} ≤ 3.6 V			20.0[Note 2]	mA
		P60, P61	Per pin	1.6 V ≤ V_{DD} ≤ 3.6 V			15.0[Note 2]	mA
		P00, P01, P02, P03, P40, P120, P130, P140	Total[Note 3]	2.7 V ≤ V_{DD} ≤ 3.6 V			15.0	mA
				1.8 V ≤ V_{DD} < 2.7 V			9.0	mA
				1.6 V ≤ V_{DD} < 1.8 V			4.5	mA
		P10, P11, P12, P13, P14, P15, P16, P30, P60, P61, P147	Total[Note 3]	2.7 V ≤ V_{DD} ≤ 3.6 V			35.0	mA
				1.8 V ≤ V_{DD} < 2.7 V			20.0	mA
				1.6 V ≤ V_{DD} < 1.8 V			10.0	mA
		Total of all pins[Note 3]		1.6 V ≤ V_{DD} ≤ 3.6 V			150.0	mA
	I_{OL2}	P20, P21, P22, P23	Per pin	1.6 V ≤ V_{DD} ≤ 3.6 V			0.4[Note 2]	mA
			Total[Note 3]	1.6 V ≤ V_{DD} ≤ 3.6 V			5.0	mA
	I_{OLRF}	GPIO0, GPIO1, GPIO2, GPIO3	Per pin	1.6 V ≤ V_{DD_RF} ≤ 3.6 V			2.0	mA

Notes 1. Value of current at which the device operation is guaranteed even if the current flows from the V_{DD} pin to an output pin.

2. However, do not exceed the total current value.

3. Specification under conditions where the duty factor ≤ 70%.

The output current value that has changed to the duty factor > 70% the duty ratio can be calculated with the following expression (when changing the duty factor from 70% to n%).

- Total output current of pins = (I_{OH} × 0.7)/(n × 0.01)

<Example> Where n = 50% and I_{OH} = –10.0 mA

Total output current of pins = (–10.0 × 0.7)/(50 × 0.01) = –14.0 mA

However, the current that is allowed to flow into one pin does not vary depending on the duty factor. A current higher than the absolute maximum rating must not flow into one pin.

4. Product for industrial applications (R5F11AGGDNB, R5F11AGHDNB, R5F11AGJDNB) is –100.0 mA.

(**Caution** and **Remark** are listed on the next page.)

Caution P00, P02, P03, and P10 to P15 do not output high level in N-ch open-drain mode.

Remark Unless specified otherwise, the characteristics of alternate-function pins are the same as those of the port pins.

30.4.2 Input current

(T_A = –40 to +85°C, 1.6 V ≤ V_{DD} = V_{DD_RF} = AV_{DD_RF} ≤ 3.6 V, V_{SS} = V_{SS_RF} = AV_{SS_RF} = 0 V)

Items	Symbol	Conditions		MIN.	TYP.	MAX.	Unit
Input voltage, high	V_{IH1}	P00, P01, P02, P03, P10, P11, P12, P13, P14, P15, P16, P30, P40, P120, P130, P140, P147	Normal mode (I_{THL} = 1)	0.8V_{DD}		V_{DD}	V
	V_{IH2}	P01, P03, P10, P11, P13, P14, P15, P16	TTL mode 3.3 V ≤ V_{DD} ≤ 3.6 V	2.0		V_{DD}	V
			TTL mode 1.6 V ≤ V_{DD} < 3.3V	1.5		V_{DD}	V
	V_{IH3}	P20, P21, P22, P23		0.7V_{DD}		V_{DD}	V
	V_{IH4}	P60, P61		0.7V_{DD}		6.0	V
	V_{IH5}	P121, P122, P123, P124, P137, $\overline{RESET}$		0.8V_{DD}		V_{DD}	V
	V_{IHRF}	GPIO0, GPIO1, GPIO2, GPIO3		0.85V_{DD_RF}		V_{DD_RF}	V
Input voltage, low	V_{IL1}	P00, P01, P02, P03, P10, P11, P12, P13, P14, P15, P16, P30, P40, P120, P140, P147	Normal mode (I_{THL} = 1)	0		0.2V_{DD}	V
	V_{IL2}	P01, P03, P10, P11, P13, P14, P15, P16	TTL mode 3.3 V ≤ V_{DD} ≤ 3.6 V	0		0.5	V
			TTL mode 1.6 V ≤ V_{DD} < 3.3V	0		0.32	V
	V_{IL3}	P20, P21, P22, P23		0		0.3V_{DD}	V
	V_{IL4}	P60, P61		0		0.3V_{DD}	V
	V_{IL5}	P121, P122, P123, P124, P137, $\overline{RESET}$		0		0.2V_{DD}	V
	V_{ILRF}	GPIO0, GPIO1, GPIO2, GPIO3		0		0.1V_{DD_RF}	V

Caution The maximum value of V_{IH} of pins P00, P02, P03, and P10 to P15 is V_{DD}, even in the N-ch open-drain mode.

Remark Unless specified otherwise, the characteristics of alternate-function pins are the same as those of the port pins.

30.4.3 Output voltage

(T_A = –40 to +85°C, 1.6 V ≤ V_{DD} = V_{DD_RF} = AV_{DD_RF} ≤ 3.6 V, V_{SS} = V_{SS_RF} = AV_{SS_RF} = 0 V)

Items	Symbol	Conditions			MIN.	TYP.	MAX.	Unit
Output voltage, high	V_{OH1}	I_{OH} = –2.0 mA	P00, P01, P02, P03, P10, P11, P12, P13, P14, P15, P16, P30, P40, P120, P140, P147	2.7 V ≤ V_{DD} ≤ 3.6 V	V_{DD} – 0.6			V
		I_{OH} = –1.5 mA		1.8 V ≤ V_{DD} ≤ 3.6 V	V_{DD} – 0.5			V
		I_{OH} = –1.0 mA		1.6 V ≤ V_{DD} ≤ 3.6 V	V_{DD} – 0.5			V
		I_{OH} = –10 μA	P130		V_{DD} – 0.3			V
	V_{OH2}	I_{OH} = –100 μA	P20, P21, P22, P23		V_{DD} – 0.5			V
	V_{OHRF}	I_{OH} = –2.0 mA	GPIO0, GPIO1, GPIO2, GPIO3	2.7 V ≤ V_{DD_RF} ≤ 3.6 V	V_{DD_RF} – 0.3			V
		I_{OH} = –1.5 mA		1.8 V ≤ V_{DD_RF} ≤ 3.6 V	V_{DD_RF} – 0.3			V
Output voltage, low	V_{OL1}	I_{OL} = 3.0 mA	P00, P01, P02, P03, P10, P11, P12, P13, P14, P15, P16, P30, P40, P120, P130, P140, P147	2.7 V ≤ V_{DD} ≤ 3.6 V			0.6	V
		I_{OL} = 1.5 mA					0.4	V
		I_{OL} = 0.6 mA		1.8 V ≤ V_{DD} ≤ 3.6 V			0.4	V
		I_{OL} = 0.3 mA		1.6 V ≤ V_{DD} ≤ 3.6 V			0.4	V
	V_{OL2}	I_{OL} = 400 μA	P20, P21, P22, P23				0.4	V
	V_{OLRF}		GPIO0, GPIO1, GPIO2, GPIO3				0.3	V

Caution P00, P02, P03, and P10 to P15 do not output high level in N-ch open-drain mode.

Remark Unless specified otherwise, the characteristics of alternate-function pins are the same as those of the port pins.

30.4.4 Input leakage current

(T_A = –40 to +85°C, 1.6 V ≤ V_{DD} = V_{DD_RF} = AV_{DD_RF} ≤ 3.6 V, V_{SS} = V_{SS_RF} = AV_{SS_RF} = 0 V)

Items	Symbol	Conditions			MIN.	TYP.	MAX.	Unit
Input leakage current, high	I_{LIH1}	VI = V_{DD}	P00, P01, P02, P03, P10, P11, P12, P13, P14, P15, P16, P30, P40, P60, P61, P120, P140, P147				1	μA
	I_{LIH2}	VI = V_{DD}	P20, P21, P22, P23, P137, $\overline{\text{RESET}}$				1	μA
	I_{LIH3}	VI = V_{DD}	P121, P122, P123, P124 (EXCLK, EXCLKS) (XT1, XT2)	In input port			1	μA
				In external clock input			1	μA
				In resonator connection			10	μA
	I_{LIHRF}	VI = V_{DD_RF}	GPIO0, GPIO1, GPIO2, GPIO3				10	μA
Input leakage current, low	I_{LIL1}	VI = V_{SS}	P00, P01, P02, P03, P10, P11, P12, P13, P14, P15, P16, P30, P40, P60, P61, P120, P140, P147				-1	μA
	I_{LIL2}	VI = V_{SS}	P20, P21, P22, P23, P137, $\overline{\text{RESET}}$				-1	μA
	I_{LIL3}	VI = V_{SS}	P121, P122, P123, P124 (EXCLK, EXCLKS) (XT1, XT2)	In input port			-1	μA
				In external clock input			-1	μA
				In resonator connection			-10	μA
	I_{LILRF}	VI = V_{SS_RF}	GPIO0, GPIO1, GPIO2, GPIO3				-10	μA

Remark Unless specified otherwise, the characteristics of alternate-function pins are the same as those of the port pins.

30.4.5 Resistance

(T_A = –40 to +85°C, 1.6 V ≤ V_{DD} = V_{DD_RF} = AV_{DD_RF} ≤ 3.6 V, V_{SS} = V_{SS_RF} = AV_{SS_RF} = 0 V)

Items	Symbol	Conditions		MIN.	TYP.	MAX.	Unit
On-chip pll-up resistance	R_U	VI = V_{SS}	P00, P01, P02, P03, P10, P11, P12, P13, P14, P15, P16, P30, P40, P120, P140, P147 In input mode	10	20	100	kΩ

Remark Unless specified otherwise, the characteristics of alternate-function pins are the same as those of the port pins.

30.5 Current Consumption

The Current Consumption by the RL78/G1D is the total current including that for the MCU (current flowing into the V_{DD} pin) and that for the RF unit (current flowing into the V_{DD_RF}, AV_{DD_RF} pins).

The characteristics of the MCU (current flowing into the V_{DD} pin) are given in 30.5.1 and the characteristics of the RF unit (current flowing into the V_{DD_RF}/AV_{DD_RF} pins) are given in 30.5.2

30.5.1 MCU

(1) Operating current

(T_A = –40 to +85°C, 1.6 V ≤ V_{DD} = V_{DD_RF} = AV_{DD_RF} ≤ 3.6 V, V_{SS} = V_{SS_RF} = AV_{SS_RF} = 0 V)

Parameter	Symbol	Conditions				MIN.	TYP.	MAX.	Unit
Operating current Note 1	I_{DD1}	HS (high-speed main) mode Note 5	Basic operation	f_{IH} = 32 MHz Note 2	V_{DD} = 3.0 V		2.3		mA
			Normal operation	f_{IH} = 32 MHz Note 2	V_{DD} = 3.0 V		5.2	8.5	mA
				f_{IH} = 24 MHz Note 2	V_{DD} = 3.0 V		4.1	6.6	mA
				f_{IH} = 16 MHz Note 2	V_{DD} = 3.0 V		3.0	4.7	mA
		LS(low-speed main) mode Note 5	Normal operation	f_{IH} = 8 MHz Note 2	V_{DD} = 3.0 V		1.3	2.1	mA
					V_{DD} = 2.0 V		1.3	2.1	mA
		LV (low-voltage main) mode Note 5	Normal operation	f_{IH} = 4 MHz Note 2	V_{DD} = 3.0 V		1.3	1.8	mA
					V_{DD} = 2.0 V		1.3	1.8	mA
		HS (high-speed main) mode Note 5	Normal operation	f_{MX} = 20 MHz Note 3	V_{DD} = 3.0 V Note 6		3.4	5.5	mA
							3.6	5.7	mA
				f_{MX} = 10 MHz Note 3	V_{DD} = 3.0 V Note 6		2.1	3.2	mA
							2.1	3.2	mA
		LS (low-speed main) mode Note 5	Normal operation	f_{MX} = 8 MHz Note 3	V_{DD} = 3.0 V Note 6		1.2	2.0	mA
							1.2	2.0	mA
					V_{DD} = 2.0 V Note 6		1.2	2.0	mA
							1.2	2.0	mA
		Subsystem clock operation	Normal operation	f_{SUB} = 32.768 kHz Note 4	T_A = -40°C Note 6		4.8	5.9	μA
							4.9	6.0	μA
					T_A = +25°C Note 6		4.9	5.9	μA
							5.0	6.0	μA
					T_A = +50°C Note 6		5.0	7.6	μA
							5.1	7.7	μA
					T_A = +70°C Note 6		5.2	9.3	μA
							5.3	9.4	μA
					T_A = +85°C Note 6		5.7	13.3	μA
							5.8	13.4	μA

(**Notes** and **Remarks** are listed on the next page.)

Notes 1. Current flowing into V_{DD}, including the input leakage current flowing when the level of the input pin is fixed to V_{DD} or V_{SS}. The values below the MAX. column include the peripheral operation current. However, not including the current flowing into the A/D converter, LVD circuit, I/O port, and on-chip pull-up/pull-down resistors and the current flowing during data flash rewrite.

2. When high-speed system clock and subsystem clock are stopped.

3. When high-speed on-chip oscillator and subsystem clock are stopped.

4. When high-speed on-chip oscillator and high-speed system clock are stopped. When setting ultra-low current consumption (AMPHS1 = 1). Not including the current flowing into the RTC, 12-bit interval timer, and watchdog timer.

5. Relationship between operation voltage width, operation frequency of CPU and operation mode is as below.

HS (high-speed main) mode: 2.7 V ≤ V_{DD} ≤ 3.6 V@1 MHz to 32 MHz
2.4 V ≤ V_{DD} ≤ 3.6 V@1 MHz to 16 MHz
LS (low-speed main) mode: 1.8 V ≤ V_{DD} ≤ 3.6 V@1 MHz to 8 MHz
LV (low-voltage main) mode: 1.6 V ≤ V_{DD} ≤ 3.6 V@1 MHz to 4 MHz

6. The upper value is for square-wave input and the lower is with an oscillator connected.

Remarks 1. f_{MX}: High-speed system clock frequency (External main system clock frequency)

2. f_{IH}: High-speed on-chip oscillator clock frequency

3. f_{SUB}: Subsystem clock frequency (XT1 clock oscillation frequency)

4. Except subsystem clock operation, temperature condition of the TYP. value is T_A = 25°C

(2) Standby current

(T_A = –40 to +85°C, 1.6 V ≤ V_{DD} = V_{DD_RF} = AV_{DD_RF} ≤ 3.6 V, V_{SS} = V_{SS_RF} = AV_{SS_RF} = 0 V)

Parameter	Symbol	Conditions			MIN.	TYP.	MAX.	Unit
HALT current Note 1, 2	I_{DD2}	HS (high-speed main) mode Note 7	f_{IH} = 32 MHz Note 4	V_{DD} = 3.0 V		0.62	1.86	mA
			f_{IH} = 24 MHz Note 4	V_{DD} = 3.0 V		0.50	1.45	mA
			f_{IH} = 16 MHz Note 4	V_{DD} = 3.0 V		0.44	1.11	mA
		LS (low-speed main) mode Note 7	f_{IH} = 8 MHz Note 4	V_{DD} = 3.0 V		290	620	μA
				V_{DD} = 2.0 V		290	620	μA
		LV (low-voltage main) mode Note 7	f_{IH} = 4 MHz Note 4	V_{DD} = 3.0 V		440	680	μA
				V_{DD} = 2.0 V		440	680	μA
		HS (high-speed main) mode Note 7	f_{MX} = 20 MHz Note 3	V_{DD} = 3.0 V Note 9		0.31	1.08	mA
						0.48	1.28	mA
			f_{MX} = 10 MHz Note 3	V_{DD} = 3.0 V Note 9		0.21	0.63	mA
						0.28	0.71	mA
		LS (low-speed main) mode Note 7	f_{MX} = 8 MHz Note 3	V_{DD} = 3.0 V Note 9		110	360	μA
						160	420	μA
				V_{DD} = 2.0 V Note 9		110	360	μA
						160	420	μA
		Subsystem clock operation	f_{SUB} = 32.768kHz Note 5	T_A = –40°C Note 9		0.28	0.61	μA
						0.47	0.80	μA
				T_A = +25°C Note 9		0.34	0.61	μA
						0.53	0.80	μA
				T_A = +50°C Note 9		0.41	2.30	μA
						0.60	2.49	μA
				T_A = +70°C Note 9		0.64	4.03	μA
						0.83	4.22	μA
				T_A = +85°C Note 9		1.09	8.04	μA
						1.28	8.23	μA
STOP current Note 6, 8	I_{DD3}	T_A = –40°C				0.19	0.52	μA
		T_A = +25°C				0.25	0.52	μA
		T_A = +50°C				0.32	2.21	μA
		T_A = +70°C				0.55	3.94	μA
		T_A = +85°C				1.00	7.95	μA

(**Notes** and **Remarks** are listed on the next page.)

Notes 1. Current flowing into V_{DD}, including the input leakage current flowing when the level of the input pin is fixed to V_{DD} or V_{SS}. The values below the MAX. column include the peripheral operation current. However, not including the current flowing into the A/D converter, LVD circuit, I/O port, and on-chip pull-up/pull-down resistors and the current flowing during data flash rewrite.

2. During HALT instruction execution by flash memory.

3. When high-speed on-chip oscillator and subsystem clock are stopped.

4. When high-speed system clock and subsystem clock are stopped.

5. When high-speed on-chip oscillator and high-speed system clock are stopped. When setting ultra-low current consumption (AMPHS1 = 1). The current flowing into the RTC is included. However, not including the current flowing into the 12-bit interval timer and watchdog timer.

6. Not including the current flowing into the RTC, 12-bit interval timer, and watchdog timer.

7. Relationship between operation voltage width, operation frequency of CPU and operation mode is as below.

HS (high-speed main) mode: 2.7 V ≤ V_{DD} ≤ 3.6 V@1 MHz to 32 MHz
2.4 V ≤ V_{DD} ≤ 3.6 V@1 MHz to 16 MHz
LS (low-speed main) mode: 1.8 V ≤ V_{DD} ≤ 3.6 V@1 MHz to 8 MHz
LV (low-voltage main) mode: 1.6 V ≤ V_{DD} ≤ 3.6 V@1 MHz to 4 MHz

8. If operation of the subsystem clock when STOP mode, same as when HALT mode of subsystem clock operation.

9. The upper value is for square-wave input and the lower is with an oscillator connected.

Remarks 1. f_{MX}: High-speed system clock frequency (External main system clock frequency)

2. f_{IH}: High-speed on-chip oscillator clock frequency

3. f_{SUB}: Subsystem clock frequency (XT1 clock oscillation frequency)

4. Except subsystem clock operation and STOP mode, temperature condition of the TYP. value is T_A = 25°C

(3) Current for each peripheral circuit

(T_A = –40 to +85°C, 1.6 V ≤ V_{DD} = V_{DD_RF} = AV_{DD_RF} ≤ 3.6 V, V_{SS} = V_{SS_RF} = AV_{SS_RF} = 0 V)

Parameter	Symbol	Conditions		MIN.	TYP.	MAX.	Unit
Low-speed on-chip oscillator operating current	I_{FIL} Note 1				0.20		μA
Current when PCLBUZ0 and EXSLK_RF are connected together and MCU supplies RF slow clock to RF	I_{PCEX} Note 1				1.0		μA
RTC operating current	I_{RTC} Notes 1, 2, 3				0.02		μA
12-bit interval timer operating current	I_{IT} Notes 1, 2, 4				0.02		μA
Watchdog timer operating current	I_{WDT} Notes 1, 2, 5	f_{IL} is 15 kHz			0.22		μA
A/D converter operating current	I_{ADC} Notes 1, 6	When conversion at maximum speed	AV_{REFP} = V_{DD} = 3.0 V		0.5	0.7	mA
A/D converter reference voltage current	I_{ADREF} Note 1				75.0		μA
Thermometer sensor operating current	I_{TMPS} Note 1				75.0		μA
LVD operating current	I_{LVI} Note 1, 7				0.08		μA
Flash self-programming operating current	I_{FSP} Notes 1, 9				2.50	12.20	mA
BGO current	I_{BGO} Notes 1, 8				2.50	12.20	mA
SNOOZE operating current	I_{SNOZ} Note 1	ADC operation	The mode is performed Note 10		0.50	0.60	mA
			The A/D conversion operations are performed, Low voltage mode, AV_{REFP} = V_{DD} = 3.0 V		1.20	1.44	mA
		CSI/UART operation			0.70	0.84	mA

Notes 1. Current flowing to V_{DD}.

2. When high speed on-chip oscillator and high-speed system clock are stopped.

3. Current flowing only to the real-time clock (RTC) (excluding the operating current of the XT1 oscillator). The value of the current value of the RL78 microcontroller is the sum of the values of either I_{DD1} or I_{DD2}, and I_{RTC}, when the real-time clock operates in operation mode or HALT mode. Also, add the value of IFIL in case of selecting low-speed on-chip oscillator. I_{DD2} subsystem clock operation includes the operational current of the real-time clock.

4. Current flowing only to the 12 bit interval timer (including the operating current of the low-speed on-chip oscillator). The current value of the MCU is the sum of I_{DD1} or I_{DD2} and I_{IT} when f_{CLK} = f_{SUB} when the watchdog timer operates in STOP mode. When using low-speed on-chip oscillator, add I_{FIL}.

5. Current flowing only to the watchdog timer (including the operating current of the low-speed on-chip oscillator). The current value of the MCU is the sum of I_{DD1}, I_{DD2} or I_{DD3} and I_{WDT} when the watchdog timer is in operation.

6. Current flowing only to the A/D converter. The current value of MCU is the sum of I_{DD1} or I_{DD2} and I_{ADC} when the A/D converter operates in an operation mode or the HALT mode.

7. Current flowing only to the LVD circuit. The current value of MCU is the sum of I_{DD1}, I_{DD2} or I_{DD3} and I_{LVI} when the LVD circuit is in operation.

8. Current flowing when operates rewriting to Data flash.

9. Current flowing when operates flash self-programming.

10. Shift time to the SNOOZE mode is referred User's Manual: Hardware.

(**Remarks** are listed on the next page.)

Remarks 1. f_{IL}: Low-speed on-chip oscillator clock frequency
2. f_{SUB}: Subsystem clock frequency
3. f_{CLK}: CPU and peripheral hardware clock frequency
4. Temperature condition of the TYP. value is T_A = 25°C

30.5.2 RF unit

(T_A = –40 to +85°C, 1.6 V ≤ V_{DD} = V_{DD_RF} = AV_{DD_RF} ≤ 3.6 V, V_{SS} = V_{SS_RF} = AV_{SS_RF} = 0 V)

Parameter	Symbol	Conditions			MIN.	TYP.	MAX.	Unit
Supply current Note 1, 2	I_{DDRFTX}	Transmission peak current	Transmission output power 0 dBm	RF normal mode	-	4.3	5.7	mA
					-	7.4	9.0	mA
				RF low power mode	-	2.6	4.1	mA
					-	4.4	6.0	mA
				RF high performance mode	-	4.3	5.7	mA
					-	7.4	9.0	mA
	I_{DDRFRX}	Reception peak current		RF normal mode	-	3.5	5.0	mA
					-	6.2	7.5	mA
				RF low power mode	-	3.3	4.8	mA
					-	5.8	7.1	mA
				RF high performance mode	-	3.7	5.2	mA
					-	6.6	7.9	mA
	I_{DDRFST}	STANDBY_RF current			-	0.40	0.9	mA
					-	0.28	0.8	mA
	I_{DDRFSL}	SLEEP_RF current			-	0.50	1.1	mA
					-	0.36	0.8	mA
	I_{DDRFDS}	DEEP_SLEEP current		RF slow clock externally input through EXSLK_RF	-	0.14	3.6	μA
					-	0.14	3.6	μA
				RF slow clock from on-chip oscillator	-	1.8	6.8	μA
					-	1.8	6.8	μA
	I_{DDRFPD}	POWER_DOWN current			-	0.10	3.0	μA
					-	0.10	3.0	μA
	I_{DDRFRS}	RESET_RF current			-	0.10	3.0	μA
					-	0.10	3.0	μA
	I_{DDRFIL}	IDLE_RF current			-	0.50	1.1	mA
					-	0.60	1.1	mA
	I_{DDRFSU}	SETUP_RF current			-	2.5	4.7	mA
					-	3.5	5.0	mA

Notes 1. Total current flowing into V_{DD_RF}, and AV_{DD_RF}.
2 For each item, the values in the upper and lower row apply respectively when the DC/DC converter embedded in the RF chip is and is not in use.

30.6 AC Characteristics

(T_A = –40 to +85°C, 1.6 V ≤ V_{DD} = V_{DD_RF} = AV_{DD_RF} ≤ 3.6 V, V_{SS} = V_{SS_RF} = AV_{SS_RF} = 0 V)

Items	Symbol	Conditions			MIN.	TYP.	MAX.	Unit
Cycle time (minimum instruction execution time)	T_{CY}	Main system (f_{MAIN}) clock operation	HS (high-speed main) mode	2.7 V ≤ V_{DD} ≤ 3.6 V	0.03125		1	μs
				2.4 V ≤ V_{DD} < 2.7 V	0.0625		1	μs
			LV (low-voltage main) mode		0.25		1	μs
			LS (low-speed main) mode		0.125		1	μs
		Subsystem clock (f_{SUB}) operation			28.5	30.5	31.3	μs
		In the self programming mode	HS (high-speed main) mode	2.7 V ≤ V_{DD} ≤ 3.6 V	0.03125		1	μs
				2.4 V ≤ V_{DD} < 2.7 V	0.0625		1	μs
			LV (low-voltage main) mode		0.25		1	μs
			LS (low-speed main) mode		0.125		1	μs
External clock frequency	f_{EX}	EXCLK		2.7 V ≤ V_{DD} ≤ 3.6 V	1		20	MHz
				2.4 V ≤ V_{DD} < 2.7 V	1		16	MHz
				1.8 V ≤ V_{DD} < 2.4 V	1		8	MHz
	f_{EXS}	EXCLKS			32		35	kHz
	f_{EXRF}	EXSLK_RF	When 32.768 kHz input	±500 ppm	32.751616	32.768	32.784384	kHz
			When 16.384 kHz input	±500 ppm	16.375808	16.384	16.392192	kHz
External clock input high-level width, low-level width	t_{EXH}, t_{EXL}	EXCLK		2.7 V ≤ V_{DD} ≤ 3.6 V	24			ns
				2.4 V ≤ V_{DD} < 2.7 V	30			ns
				1.8 V ≤ V_{DD} < 2.4 V	60			ns
	t_{EXHS}, t_{EXLS}	EXCLKS			13.7			μs
	t_{EXHRF}, t_{EXLRF}	EXSLK_RF	When 32.768 kHz input		0.08	15.258	32.69	μs
			When 16.384 kHz input		0.08	8.192	16.304	μs
Timer input high-level width, low-level width	t_{TIH}, t_{TIL}	TI00, TI01, TI02, TI03, TI04, TI05, TI06, TI07			1/f_{MCK}+10			ns
Timer output frequency	t_{TO}	TI00, TI01, TI02, TI03, TI04, TI05, TI06, TI07	HS (high-speed main) mode	2.7 V ≤ V_{DD} < 3.6 V			8	MHz
				2.4 V ≤ V_{DD} < 2.7 V			4	MHz
			LV (low-voltage main) mode				4	MHz
			LS (low-speed main) mode				4	MHz
Clock/buzzer output frequency	t_{PLC}	PCLBUZ0	HS (high-speed main) mode	2.7 V ≤ V_{DD} < 3.6 V			8	MHz
				2.4 V ≤ V_{DD} < 2.7 V			4	MHz
			LV (low-voltage main) mode				4	MHz
			LS (low-speed main) mode				4	MHz
	t_{PCLRF}	CLKOUT_RF					16	MHz

Remark f_{MCK}: Timer array unit operation clock frequency
(Operation clock to be set by the CKSmn0, CKSmn1 bits of timer mode register mn (TMRmn).
m: Unit number (m = 0, 1), n: Channel number (n = 0 to 7))

(T_A = –40 to +85°C, 1.6 V ≤ V_{DD} = V_{DD_RF} = AV_{DD_RF} ≤ 3.6 V, V_{SS} = V_{SS_RF} = AV_{SS_RF} = 0 V) (2/2)

Items	Symbol	Conditions	MIN.	TYP.	MAX.	Unit
Interrupt input high-level width, low-level width	t_{INTH}, t_{INTL}	INTP0, INTP3, INTP5, INTP6	1			μs
External PA control output High-level width	t_{PAHRF}	TXSELH_RF	283			μs
External PA control output low-level width	t_{PALRF}	TXSELL_RF	283			μs
$\overline{\text{RESET}}$ low-level width	t_{RSL}	$\overline{\text{RESET}}$	10			μs
$\overline{\text{RESET\_RF}}$ internal pin low-level width	t_{RSTLRF}	$\overline{\text{RESET\_RF}}$ internal pin	31			μs

Minimum Instruction Execution Time during Main System Clock Operation

T_{CY} vs V_{DD} (HS (high-speed main) mode)

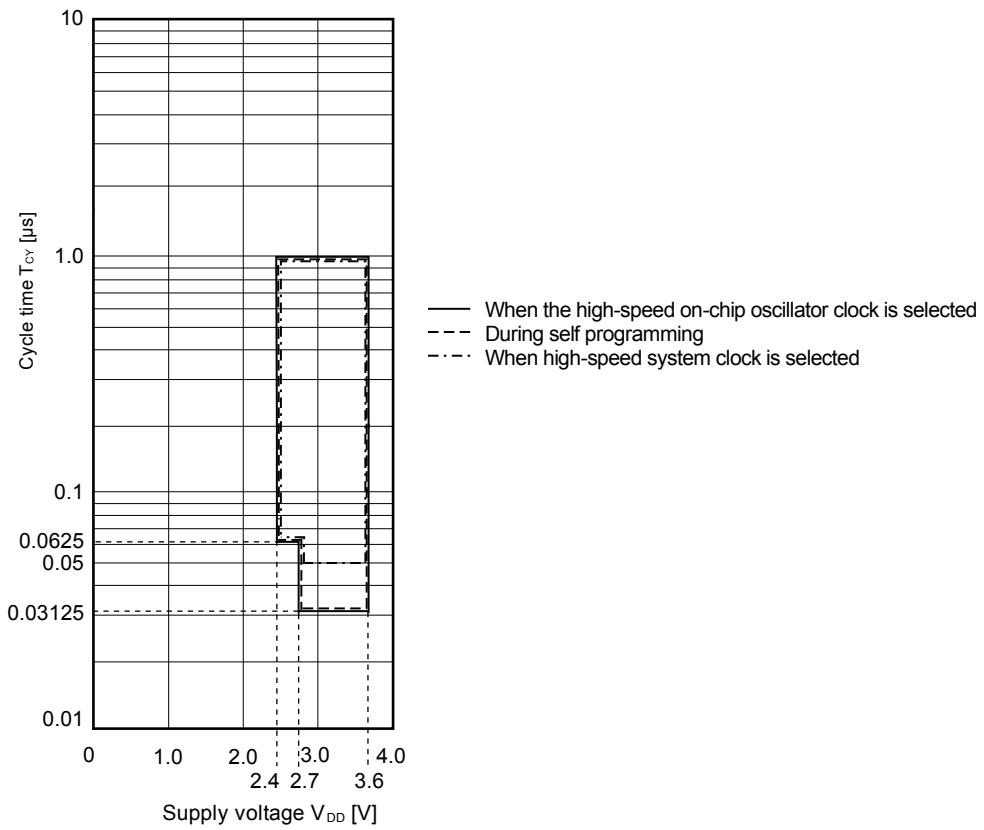

T_{CY} vs V_{DD} (LS (low-speed main) mode)

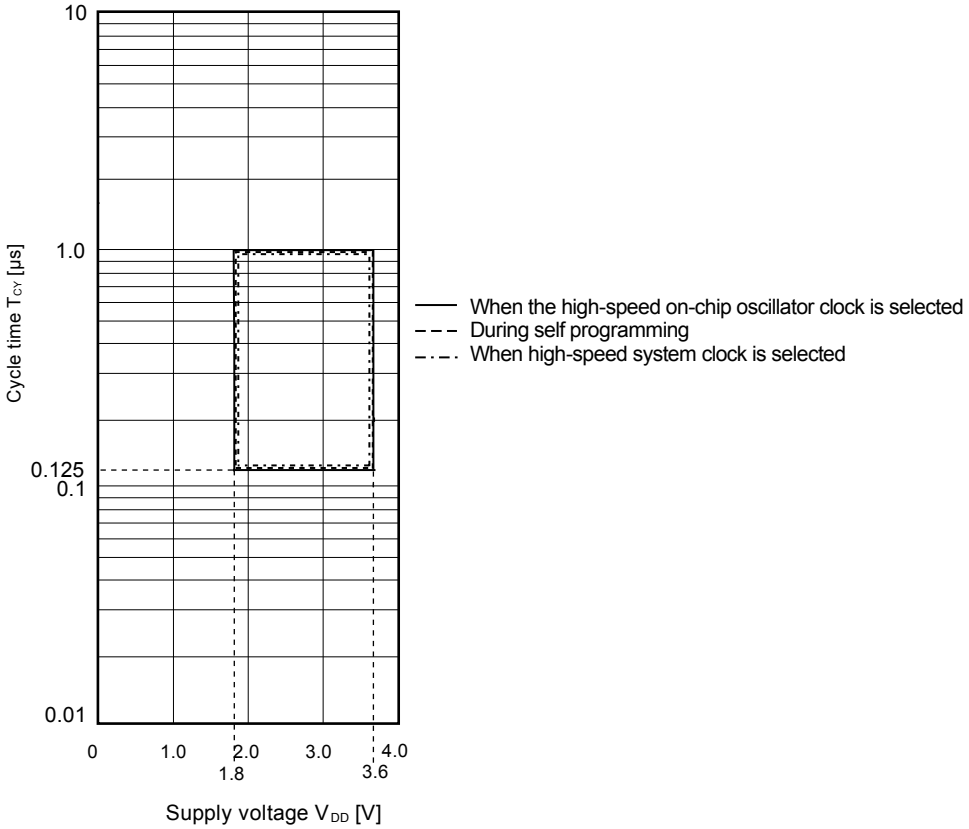

T_{CY} vs V_{DD} (LV (low-voltage main) mode)

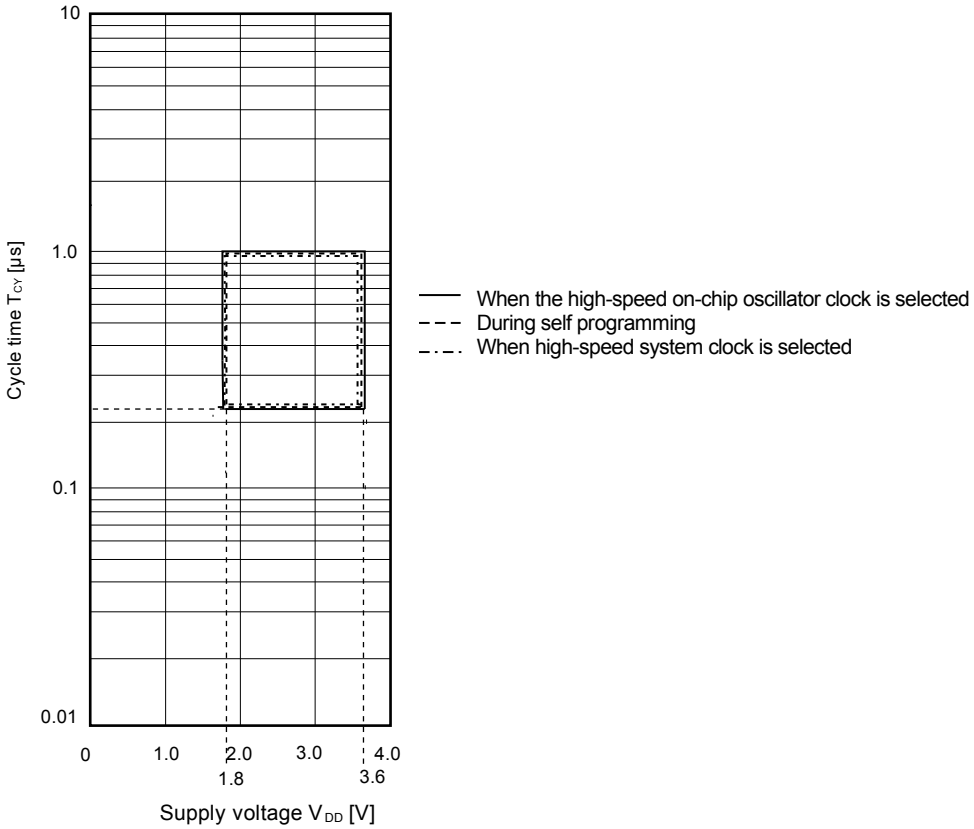

AC Timing Test Points

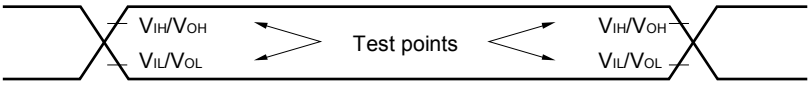

External System Clock Timing

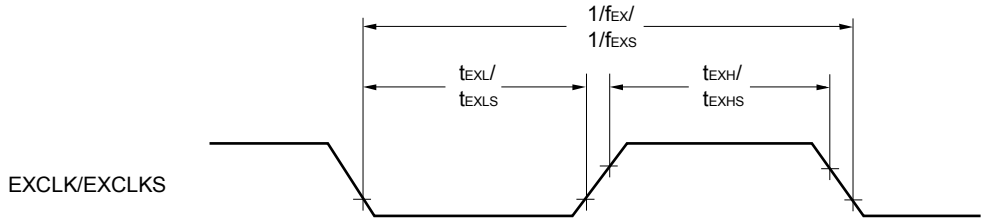

TI/TO Timing

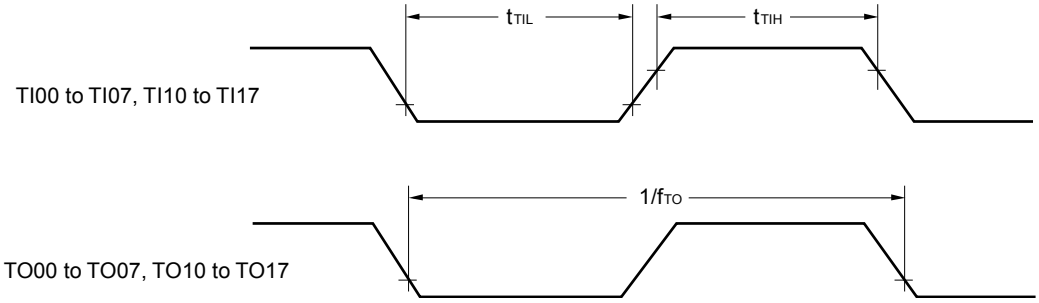

Interrupt Request Input Timing

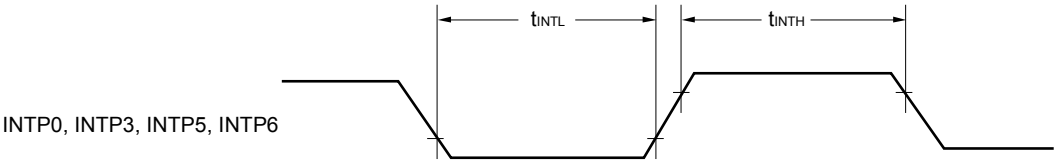

$\overline{\text{RESET}}$ Input Timing

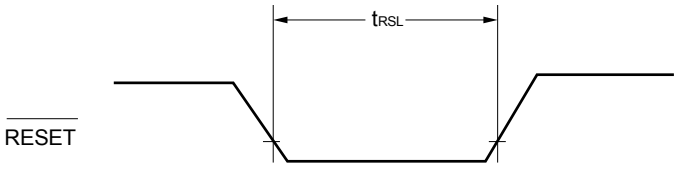

30.7 Peripheral Functions Characteristics

AC Timing Test Points

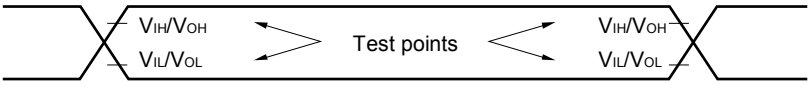

30.7.1 Serial array unit

(1) During communication at same potential (UART mode)

(T_A = –40 to +85°C, 1.6 V ≤ V_{DD} = V_{DD_RF} = AV_{DD_RF} ≤ 3.6 V, V_{SS} = V_{SS_RF} = AV_{SS_RF} = 0 V)

Parameter	Symbol	Conditions		HS (high-speed main) Mode	LS (low-speed main) Mode	LV (low-voltage main) Mode	Unit
				MAX.	MAX.	MAX.	
Transfer rate Note 1		2.4 V ≤ V_{DD} ≤ 3.6 V		f_{MCK}/6	f_{MCK}/6	f_{MCK}/6	bps
			Theoretical value of the maximum transfer rate f_{MCK} = f_{CLK} Note 2	5.3	1.3	0.6	Mbps
		1.8 V ≤ V_{DD} ≤ 3.6 V		–	f_{MCK}/6	f_{MCK}/6	bps
			Theoretical value of the maximum transfer rate f_{MCK} = f_{CLK} Note 2	–	1.3	0.6	Mbps
		1.6 V ≤ V_{DD} ≤ 3.6 V		–	–	f_{MCK}/6	bps
			Theoretical value of the maximum transfer rate f_{MCK} = f_{CLK} Note 2	–	–	0.6	Mbps

Notes 1. Transfer rate in the SNOOZE mode is 4800 bps only.

2. Maximum operating frequency of CPU and peripheral hardware clock (f_{CLK}) is following

HS (high-speed main) mode: 32 MHz (2.7 V ≤ V_{DD} ≤ 3.6 V)
16 MHz (2.4 V ≤ V_{DD} ≤ 3.6 V)

LS (low-speed main) mode: 8 MHz (1.8 V ≤ V_{DD} ≤ 3.6 V)

LV (low-voltage main) mode: 4 MHz (1.6 V ≤ V_{DD} ≤ 3.6 V)

Caution Select the normal input buffer for the RxDq pin and the normal output mode for the TxDq pin by using port input mode register g (PIMg) and port output mode register g (POMg).

UART mode connection diagram (during communication at same potential)

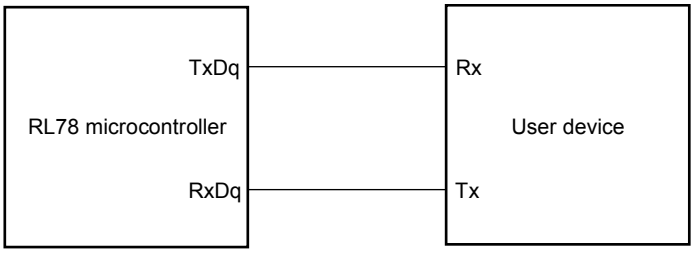

UART mode bit width (during communication at same potential) (reference)

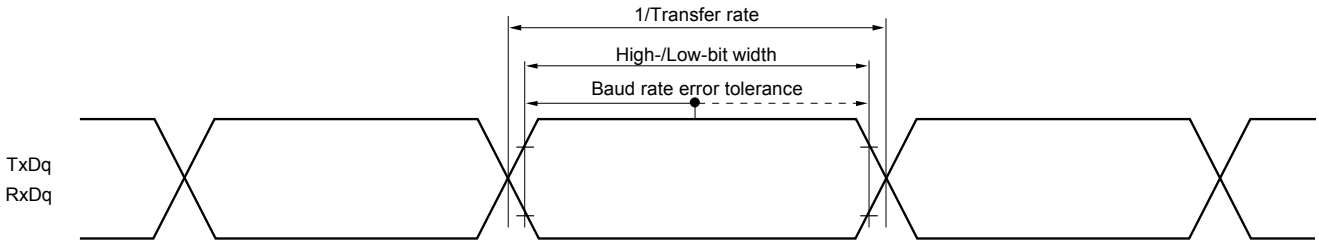

Remarks 1. q: UART number (q = 0, 1), g: PIM and POM number (g = 0, 1)

2. f_{MCK}: Serial array unit operation clock frequency
(Operation clock to be set by the CKSmn bit of serial mode register mn (SMRmn).
m: Unit number, n: Channel number (mn = 00, 01))

(2) During communication at same potential (CSI mode) (master mode, SCKp... internal clock output, supporting CSI00 only)

(T_A = –40 to +85°C, 2.7 V ≤ V_{DD} = V_{DD_RF} = AV_{DD_RF} ≤ 3.6 V, V_{SS} = V_{SS_RF} = AV_{SS_RF} = 0 V)

Parameter	Symbol	Conditions	HS (high-speed main) Mode		LS (low-speed main) Mode		LV (low-voltage main) Mode		Unit
			MIN.	MAX.	MIN.	MAX.	MIN.	MAX.	
SCKp cycle time	t_{KCY1}	t_{KCY1} ≥ 2/f_{CLK}	83.3		250		500		ns
SCKp high-/low-level width	t_{KH1}, t_{KL1}		t_{KCY1}/2 – 10		t_{KCY1}/2 – 50		t_{KCY1}/2 – 50		ns
SIp setup time (to SCKp↑) Note 1	t_{SIK1}		33		110		110		ns
SIp hold time (from SCKp↑ Note 1	t_{KSI1}		10		10		10		ns
Delay time from SCKp↓ to SOp output Note 2	t_{KSO1}	C = 20 pF Note 3		10		10		10	ns

Notes 1. When DAPmn = 0 and CKPmn = 0, or DAPmn = 1 and CKPmn = 1. The SIp time becomes "to SCKp↓" when DAPmn = 0 and CKPmn = 1, or DAPmn = 1 and CKPmn = 0.

2. When DAPmn = 0 and CKPmn = 0, or DAPmn = 1 and CKPmn = 1. The delay time to SOp output becomes "from SCKp↑" when DAPmn = 0 and CKPmn = 1, or DAPmn = 1 and CKPmn = 0.

3. C is the load capacitance of the SCKp and SOp output lines.

Cautions Select the normal input buffer for the SIp pin and the normal output mode for the SOp pin and SCKp pin by using port input mode register g (PIMg) and port output mode register g (POMg).

Remarks 1. This specification is valid only when CSI00's peripheral I/O redirect function is not used.

2. p: CSI number (p = 00), m: Unit number (m = 0), n: Channel number (n = 0), g: PIM and POM numbers (g = 1)

3. f_{MCK}: Serial array unit operation clock frequency (Operation clock to be set by the CKSmn bit of serial mode register mn (SMRmn). m: Unit number, n: Channel number (mn = 00))

(3) During communication at same potential (CSI mode) (Internal communication, supporting CSI21 only)

(T_A = –40 to +85°C, 1.6 V ≤ V_{DD} = V_{DD_RF} = AV_{DD_RF} ≤ 3.6 V, V_{SS} = V_{SS_RF} = AV_{SS_RF} = 0 V)

Parameter	Symbol	Conditions		HS (high-speed main) Mode		LS (low-speed main) Mode		LV (low-voltage main) Mode		Unit
				MIN.	MAX.	MIN.	MAX.	MIN.	MAX.	
SCKp cycle time	t_{KCY1}	t_{KCY1} ≥ 2/f_{CLK} Note	2.4 V ≤ V_{DD} ≤ 3.6 V	250		250		500		ns
			1.8 V ≤ V_{DD} ≤ 3.6 V	–		250		500		ns
			1.6 V ≤ V_{DD} ≤ 3.6 V	–		–		500		ns

Note Use the f_{CLK} more than 6.5 MHz and lower than 24 MHz.

Remark This specification is for CSI21 only.

(4) During communication at same potential (CSI mode) (master mode, SCKp... internal clock output, supporting CSI00 and CSI20)

(T_A = –40 to +85°C, 1.6 V ≤ V_{DD} = V_{DD_RF} = AV_{DD_RF} ≤ 3.6 V, V_{SS} = V_{SS_RF} = AV_{SS_RF} = 0 V)

Parameter	Symbol	Conditions		HS (high-speed main) Mode		LS (low-speed main) Mode		LV (low-voltage main) Mode		Unit
				MIN.	MAX.	MIN.	MAX.	MIN.	MAX.	
SCKp cycle time	t_{KCY1}	t_{KCY1} ≥ 4/ f_{CLK}	2.7 V ≤ V_{DD} ≤ 3.6 V	125		500		1000		ns
			2.4 V ≤ V_{DD} ≤ 3.6 V	250		500		1000		ns
			1.8 V ≤ V_{DD} ≤ 3.6 V	–		500		1000		ns
			1.6 V ≤ V_{DD} ≤ 3.6 V	–		–		1000		ns
SCKp high-/low-level width	t_{KH1}, t_{KL1}	2.7 V ≤ V_{DD} ≤ 3.6 V		t_{KCY1}/2 – 18		t_{KCY1}/2 – 50		t_{KCY1}/2 – 50		ns
		2.4 V ≤ V_{DD} ≤ 3.6 V		t_{KCY1}/2 – 38		t_{KCY1}/2 – 50		t_{KCY1}/2 – 50		ns
		1.8 V ≤ V_{DD} ≤ 3.6 V		–		t_{KCY1}/2 – 50		t_{KCY1}/2 – 50		ns
		1.6 V ≤ V_{DD} ≤ 3.6 V		–		–		t_{KCY1}/2 – 100		ns
SIp setup time (to SCKp↑) Note 1	t_{SIK1}	2.7 V ≤ V_{DD} ≤ 3.6 V		44		110		110		ns
		2.4 V ≤ V_{DD} ≤ 3.6 V		75		110		110		ns
		1.8 V ≤ V_{DD} ≤ 3.6 V		–		110		110		ns
		1.6 V ≤ V_{DD} ≤ 3.6 V		–		–		220		ns
SIp hold time (from SCKp↑) Note 1	t_{KSI1}	2.7 V ≤ V_{DD} ≤ 3.6 V		19		19		19		ns
		2.4 V ≤ V_{DD} ≤ 3.6 V		19		19		19		ns
		1.8 V ≤ V_{DD} ≤ 3.6 V		–		19		19		ns
		1.6 V ≤ V_{DD} ≤ 3.6 V		–		–		19		ns
Delay time from SCKp↓ to SOp output Note 2	t_{KSO1}	C = 30 pF Note 3	2.7 V ≤ V_{DD} ≤ 3.6 V		25		25		25	ns
			2.4 V ≤ V_{DD} ≤ 3.6 V		25		25		25	ns
			1.8 V ≤ V_{DD} ≤ 3.6 V		–		25		25	ns
			1.6 V ≤ V_{DD} ≤ 3.6 V		–		–		25	ns

Notes 1. When DAPmn = 0 and CKPmn = 0, or DAPmn = 1 and CKPmn = 1. The SIp time becomes "to SCKp↓" when DAPmn = 0 and CKPmn = 1, or DAPmn = 1 and CKPmn = 0.

2. When DAPmn = 0 and CKPmn = 0, or DAPmn = 1 and CKPmn = 1. The delay time to SOp output becomes "from SCKp↑" when DAPmn = 0 and CKPmn = 1, or DAPmn = 1 and CKPmn = 0.

3. C is the load capacitance of the SCKp and SOp output lines.

Caution Select the normal input buffer for the SIp pin and the normal output mode for the SOp pin and SCKp pin by using port input mode register g (PIMg) and port output mode register g (POMg).

Remarks 1. p: CSI number (p = 00, 10), m: Unit number (m = 0, 1), n: Channel number (n = 0, 1), g: PIM and POM numbers (g = 0, 1)

2. f_{MCK}: Serial array unit operation clock frequency (Operation clock to be set by the CKSmn bit of serial mode register mn (SMRmn). m: Unit number, n: Channel number (mn = 00, 02, 11))

(5) During communication at same potential (CSI mode) (slave mode, SCKp... external clock input, supporting CSI00 and CSI20)

(T_A = –40 to +85°C, 1.6 V ≤ V_{DD} = V_{DD_RF} = AV_{DD_RF} ≤ 3.6 V, V_{SS} = V_{SS_RF} = AV_{SS_RF} = 0 V)

Parameter	Symbol	Conditions		HS (high-speed main) Mode		LS (low-speed main) Mode		LV (low-voltage main) Mode		Unit
				MIN.	MAX.	MIN.	MAX.	MIN.	MAX.	
SCKp cycle time Note 4	t_{KCY2}	2.7 V ≤ V_{DD} ≤ 3.6 V	f_{MCK} > 16 MHz	8/f_{MCK}		–		–		ns
			f_{MCK} ≤ 16 MHz	6/f_{MCK}		6/f_{MCK}		6/f_{MCK}		
		2.4 V ≤ V_{DD} ≤ 3.6 V		6/f_{MCK} and 500		6/f_{MCK} and 500		6/f_{MCK} and 500		ns
		1.8 V ≤ V_{DD} ≤ 3.6 V		–		6/f_{MCK} and 750		6/f_{MCK} and 750		ns
		1.6 V ≤ V_{DD} ≤ 3.6 V		–		–		6/f_{MCK} and 1500		ns
SCKp high-/low-level width	t_{KH2}, t_{KL2}	2.7 V ≤ V_{DD} ≤ 3.6 V		t_{KCY2}/2–8		t_{KCY2}/2–8		t_{KCY2}/2–8		ns
		2.4 V ≤ V_{DD} ≤ 3.6 V		t_{KCY2}/2–18		t_{KCY2}/2 – 18		t_{KCY2}/2 – 18		ns
		1.8 V ≤ V_{DD} ≤ 3.6 V		–		t_{KCY2}/2 – 18		t_{KCY2}/2 – 18		ns
		1.6 V ≤ V_{DD} ≤ 3.6 V		–		–		t_{KCY2}/2 – 66		ns
SIp setup time (to SCKp↑) Note 1	t_{SIK2}	2.7 V ≤ V_{DD} ≤ 3.6 V		1/f_{MCK} +20		1/f_{MCK} +30		1/f_{MCK} +30		ns
		2.4 V ≤ V_{DD} ≤ 3.6 V		1/f_{MCK} +30		1/f_{MCK} +30		1/f_{MCK} +30		ns
		1.8 V ≤ V_{DD} ≤ 3.6 V		–		1/f_{MCK} +30		1/f_{MCK} +30		ns
		1.6 V ≤ V_{DD} ≤ 3.6 V		–		–		1/f_{MCK} +40		ns
SIp hold time (from SCKp↑) Note 1	t_{KSI2}	2.4 V ≤ V_{DD} ≤ 3.6 V		1/f_{MCK} +31		1/f_{MCK} +31		1/f_{MCK} +31		ns
		1.8 V ≤ V_{DD} ≤ 3.6 V		–		1/f_{MCK} +31		1/f_{MCK} +31		ns
		1.6 V ≤ V_{DD} ≤ 3.6 V		–		–		1/f_{MCK} +250		ns
Delay time from SCKp↓ to SOp output Note 2	t_{KSO2}	C = 30 pF Note 3	2.7 V ≤ V_{DD} ≤ 3.6 V		2/f_{MCK}+ 44		2/f_{MCK}+ 110		2/f_{MCK}+ 110	ns
			2.4 V ≤ V_{DD} ≤ 3.6 V		2/f_{MCK}+ 75		2/f_{MCK}+ 110		2/f_{MCK}+ 110	ns
			1.8 V ≤ V_{DD} ≤ 3.6 V		–		2/f_{MCK}+ 110		2/f_{MCK}+ 110	ns
			1.6 V ≤ V_{DD} ≤ 3.6 V		–		–		2/f_{MCK}+ 220	ns

Notes 1. When DAPmn = 0 and CKPmn = 0, or DAPmn = 1 and CKPmn = 1. The SIp time becomes "to SCKp↓" when DAPmn = 0 and CKPmn = 1, or DAPmn = 1 and CKPmn = 0.

2. When DAPmn = 0 and CKPmn = 0, or DAPmn = 1 and CKPmn = 1. The delay time to SOp output becomes "from SCKp↑" when DAPmn = 0 and CKPmn = 1, or DAPmn = 1 and CKPmn = 0.

3. C is the load capacitance of the SOp output lines.

4. Transfer rate in the SNOOZE mode: MAX. 1 Mbps

(**Caution** and **Remarks** are listed on the next page.)

Caution Select the normal input buffer for the SIp pin and SCKp pin and the normal output mode for the SOp pin by using port input mode register g (PIMg) and port output mode register g (POMg).

Remarks 1. p: CSI number (p = 00, 20), m: Unit number (m = 0, 1),
n: Channel number (n = 0), g: PIM and POM numbers (g = 1)

2. f_{MCK}: Serial array unit operation clock frequency
(Operation clock to be set by the CKSmn bit of serial mode register mn (SMRmn).
m: Unit number, n: Channel number (mn = 00, 10))

CSI mode connection diagram (during communication at same potential)

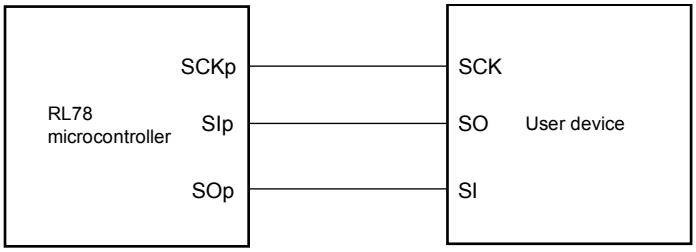

CSI mode serial transfer timing (during communication at same potential)
(When DAPmn = 0 and CKPmn = 0, or DAPmn = 1 and CKPmn = 1.)

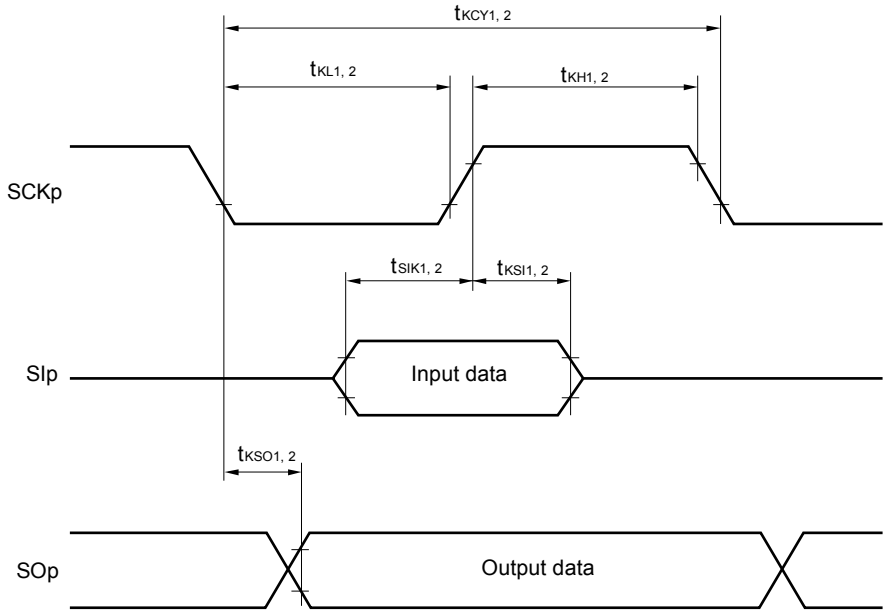

CSI mode serial transfer timing (during communication at same potential)
(When DAPmn = 0 and CKPmn = 1, or DAPmn = 1 and CKPmn = 0.)

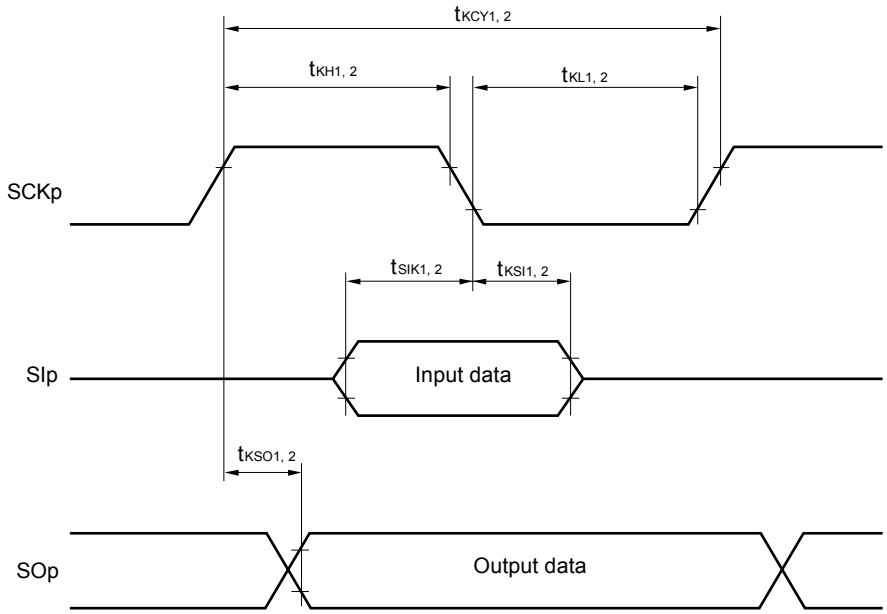

Remarks 1. p: CSI number (p = 00, 10, 21)
2. m: Unit number, n: Channel number (mn = 00, 02, 11)

(6) During communication at same potential (simplified I²C mode) (1/2)

(T_A = –40 to +85°C, 1.6 V ≤ V_{DD} = V_{DD_RF} = AV_{DD_RF} ≤ 3.6 V, V_{SS} = V_{SS_RF} = AV_{SS_RF} = 0 V)

Parameter	Symbol	Conditions	HS (high-speed main) Mode		LS (low-speed main) Mode		LV (low-voltage main) Mode		Unit
			MIN.	MAX.	MIN.	MAX.	MIN.	MAX.	
SCLr clock frequency	f_{SCL}	2.7 V ≤ V_{DD} ≤ 3.6 V, C_b = 50 pF, R_b = 2.7 kΩ		1000 Note 1		400 Note 1		400 Note 1	kHz
		2.4 V ≤ V_{DD} ≤ 3.6 V, C_b = 100 pF, R_b = 3 kΩ		400 Note 1		400 Note 1		400 Note 1	kHz
		1.8 V ≤ V_{DD} < 3.6 V, C_b = 100 pF, R_b = 3 kΩ		–		400 Note 1		400 Note 1	kHz
		2.4 V ≤ V_{DD} < 2.7 V, C_b = 100 pF, R_b = 5 kΩ		300 Note 1		300 Note 1		300 Note 1	kHz
		1.8 V ≤ V_{DD} < 2.7 V, C_b = 100 pF, R_b = 5 kΩ		–		300 Note 1		300 Note 1	kHz
		1.6 V ≤ V_{DD} < 1.8 V, C_b = 100 pF, R_b = 5 kΩ		–		–		250 Note 1	kHz
Hold time when SCLr = "L"	t_{LOW}	2.7 V ≤ V_{DD} ≤ 3.6 V, C_b = 50 pF, R_b = 2.7 kΩ	475		1150		1150		ns
		2.4 V ≤ V_{DD} ≤ 3.6 V, C_b = 100 pF, R_b = 3 kΩ	1150		1150		1150		ns
		1.8 V ≤ V_{DD} < 3.6 V, C_b = 100 pF, R_b = 3 kΩ	–		1150		1150		ns
		2.4 V ≤ V_{DD} < 2.7 V, C_b = 100 pF, R_b = 5 kΩ	1550		1550		1550		ns
		1.8 V ≤ V_{DD} < 2.7 V, C_b = 100 pF, R_b = 5 kΩ	–		1550		1550		ns
		1.6 V ≤ V_{DD} < 1.8 V, C_b = 100 pF, R_b = 5 kΩ	–		–		1850		ns
Hold time when SCLr = "H"	t_{HIGH}	2.7 V ≤ V_{DD} ≤ 3.6 V, C_b = 50 pF, R_b = 2.7 kΩ	475		1150		1150		ns
		2.4 V ≤ V_{DD} ≤ 3.6 V, C_b = 100 pF, R_b = 3 kΩ	1150		1150		1150		ns
		1.8 V ≤ V_{DD} < 3.6 V, C_b = 100 pF, R_b = 3 kΩ	–		1150		1150		ns
		2.4 V ≤ V_{DD} < 2.7 V, C_b = 100 pF, R_b = 5 kΩ	1550		1550		1550		ns
		1.8 V ≤ V_{DD} < 2.7 V, C_b = 100 pF, R_b = 5 kΩ	–		1550		1550		ns
		1.6 V ≤ V_{DD} < 1.8 V, C_b = 100 pF, R_b = 5 kΩ	–		–		1850		ns

(**Notes**, **Caution**, and **Remarks** are listed on the page after the next page.)

(6) During communication at same potential (simplified I²C mode) (2/2)

(T_A = –40 to +85°C, 1.6 V ≤ V_{DD} = V_{DD_RF} = AV_{DD_RF} ≤ 3.6 V, V_{SS} = V_{SS_RF} = AV_{SS_RF} = 0 V)

Parameter	Symbol	Conditions	HS (high-speed main) Mode		LS (low-speed main) Mode		LV (low-voltage main) Mode		Unit
			MIN.	MAX.	MIN.	MAX.	MIN.	MAX.	
Data setup time (reception)	$t_{SU:DAT}$	2.7 V ≤ V_{DD} ≤ 3.6 V, C_b = 50 pF, R_b = 2.7 kΩ	$1/f_{MCK}$ + 85 Note2		$1/f_{MCK}$ + 145 Note2		$1/f_{MCK}$ + 145 Note2		ns
		2.4 V ≤ V_{DD} ≤ 3.6 V, C_b = 100 pF, R_b = 3 kΩ	$1/f_{MCK}$ + 145 Note2		$1/f_{MCK}$ + 145 Note2		$1/f_{MCK}$ + 145 Note2		ns
		1.8 V ≤ V_{DD} < 3.6 V, C_b = 100 pF, R_b = 3 kΩ	–		$1/f_{MCK}$ + 145 Note2		$1/f_{MCK}$ + 145 Note2		ns
		2.4 V ≤ V_{DD} < 2.7 V, C_b = 100 pF, R_b = 5 kΩ	$1/f_{MCK}$ + 230 Note2		$1/f_{MCK}$ + 230 Note2		$1/f_{MCK}$ + 230 Note2		ns
		1.8 V ≤ V_{DD} < 2.7 V, C_b = 100 pF, R_b = 5 kΩ	–		$1/f_{MCK}$ + 230 Note2		$1/f_{MCK}$ + 230 Note2		ns
		1.6 V ≤ V_{DD} < 1.8 V, C_b = 100 pF, R_b = 5 kΩ	–		–		$1/f_{MCK}$ + 290 Note2		ns
Data hold time (transmission)	$t_{HD:DAT}$	2.7 V ≤ V_{DD} ≤ 3.6 V, C_b = 50 pF, R_b = 2.7 kΩ	0	305	0	305	0	305	ns
		2.4 V ≤ V_{DD} ≤ 3.6 V, C_b = 100 pF, R_b = 3 kΩ	0	355	0	355	0	355	ns
		1.8 V ≤ V_{DD} < 3.6 V, C_b = 100 pF, R_b = 3 kΩ	–	–	0	355	0	355	ns
		2.4 V ≤ V_{DD} < 2.7 V, C_b = 100 pF, R_b = 5 kΩ	0	405	0	405	0	405	ns
		1.8 V ≤ V_{DD} < 2.7 V, C_b = 100 pF, R_b = 5 kΩ	–	–	0	405	0	405	ns
		1.6 V ≤ V_{DD} < 1.8 V, C_b = 100 pF, R_b = 5 kΩ	–	–	–	–	0	405	ns

Notes 1. The value must also be f_{MCK}/4 or lower.

2. Set the f_{MCK} value to keep the hold time of SCLr = "L" and SCLr = "H".

Caution Select the normal input buffer and the N-ch open drain output (V_{DD} tolerance) mode for the SDAr pin and the normal output mode for the SCLr pin by using port input mode register g (PIMg) and port output mode register h (POMh).

(**Remarks** are listed on the next page.)

Simplified I²C mode mode connection diagram (during communication at same potential)

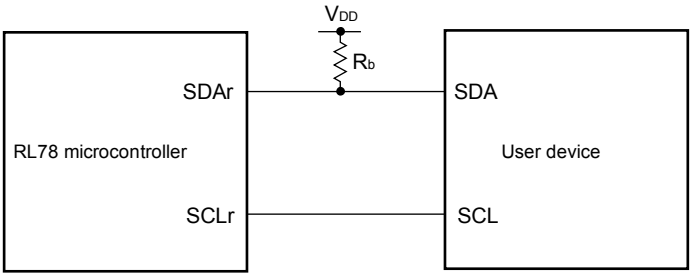

Simplified I²C mode serial transfer timing (during communication at same potential)

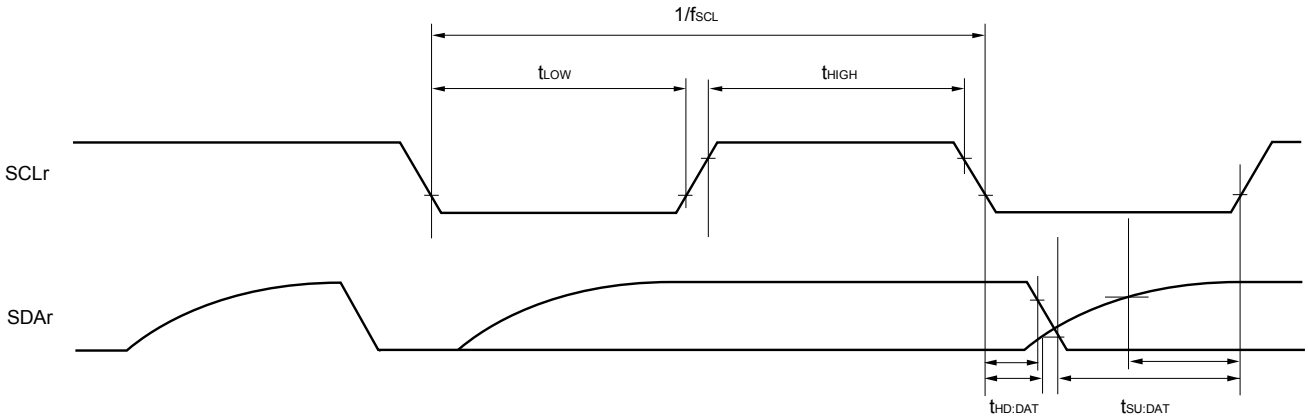

Remarks 1. R_b[Ω]:Communication line (SDAr) pull-up resistance, C_b[F]: Communication line (SDAr, SCLr) load capacitance

2. r: IIC number (r = 00, 20), g: PIM number (g =1), h: POM number (h = 1)

3. f_{MCK}: Serial array unit operation clock frequency
(Operation clockw to be set by the CKSmn bit of serial mode register mn (SMRmn). m: Unit number (m = 0, 1), n: Channel number (n = 0), mn = 00, 02)

(7) Communication at different potential (1.8 V, 2.5 V) (UART mode)

(T_A = –40 to +85°C, 2.4 V ≤ V_{DD} = V_{DD_RF} = AV_{DD_RF} ≤ 3.6 V, V_{SS} = V_{SS_RF} = AV_{SS_RF} = 0 V)

Parameter	Symbol	Conditions		HS (high-speed main) Mode	LS (low-speed main) Mode	LV (low-voltage main) Mode	Unit
				MAX.	MAX.	MAX.	
Transfer rate		Reception	2.7 V ≤ V_{DD} ≤ 3.6 V, 2.3 V ≤ V_b ≤ 2.7 V	f_{MCK}/6 Note 1	f_{MCK}/6 Note 1	f_{MCK}/6 Note 1	bps
			Theoretical value of the maximum transfer rate f_{MCK} = f_{CLK} Note 3	5.3	1.3	0.6	Mbps
			2.4 V ≤ V_{DD} ≤ 3.3 V, 1.6 V ≤ V_b ≤ 2.0 V	f_{MCK}/6 Note 1	f_{MCK}/6 Note 1	f_{MCK}/6 Note 1	bps
			Theoretical value of the maximum transfer rate f_{MCK} = f_{CLK} Note 3	2.6	1.3	0.6	Mbps
			1.8 V ≤ V_{DD} < 3.3 V, 1.6 V ≤ V_b ≤ 2.0 V	–	f_{MCK}/6 Notes 1, 2	f_{MCK}/6 Notes 1, 2	bps
			Theoretical value of the maximum transfer rate f_{MCK} = f_{CLK} Note 3	–	1.3	1.3	Mbps
		Transmission	2.7 V ≤ V_{DD} ≤ 3.6 V, 2.3 V ≤ V_b ≤ 2.7 V	**Note 4**	**Note 4**	**Note 4**	bps
			Theoretical value of the maximum transfer rate C_b = 50 pF, R_b = 2.7 kΩ, V_b = 2.3 V	1.2 Note 5	1.2 Note 5	1.2 Note 5	Mbps
			2.4 V ≤ V_{DD} < 3.3 V, 1.6 V ≤ V_b ≤ 2.0 V	**Notes 2, 6**	**Notes 2, 6**	**Notes 2, 6**	bps
			Theoretical value of the maximum transfer rate C_b = 50 pF, R_b = 5.5 kΩ, V_b = 1.6 V	0.43	0.43	0.43	Mbps
			1.8 V ≤ V_{DD} < 3.3 V, 1.6 V ≤ V_b ≤ 2.0 V	–	**Notes 2, 6**	**Notes 2, 6**	bps
			Theoretical value of the maximum transfer rate C_b = 50 pF, R_b = 5.5 kΩ, V_b = 1.6 V	–	0.43 Notes 7	0.43 Notes 7	Mbps

Notes 1. Transfer rate in the SNOOZE mode is 4800 bps only.

2. Use it with V_{DD} ≥ V_b.

3. Maximum operating frequency of CPU and peripheral hardware clock (f_{CLK}) is following

HS (high-speed main) mode: 32 MHz (2.7 V ≤ V_{DD} ≤ 3.6 V)
16 MHz (2.4 V ≤ V_{DD} ≤ 3.6 V)
LS (low-speed main) mode: 8 MHz (1.8 V ≤ V_{DD} ≤ 3.6 V)
LV (low-voltage main) mode: 4 MHz (1.8 V ≤ V_{DD} ≤ 3.6 V)

4. The smaller maximum transfer rate derived by using f_{MCK}/6 or the following expression is the valid maximum transfer rate.
Expression for calculating the transfer rate when 2.7 V ≤ V_{DD} ≤ 3.6 V and 2.3 V ≤ Vb ≤ 2.7 V
Maximum transfer rate = 1/{-Cb × Rb × ln (1 - 2.0/Vb)} × 3 [bps]
Baud rate error (theoretical value) =
(1/transfer rate × 2 - {-Cb × Rb × ln (1 - 2.0/Vb)} / (1/transfer rate) × number of transferred bits)
* This value is the theoretical value of the relative difference between the transmission and reception sides.

5. This value as an example is calculated when the conditions described in the “Conditions” column are met.
Refer to Note 4 above to calculate the maximum transfer rate under conditions of the customer.

6. The smaller maximum transfer rate derived by using f_{MCK}/6 or the following expression is the valid maximum transfer rate.
Expression for calculating the transfer rate when 1.8V ≤ V_{DD} < 3.3 V and 1.6 V ≤ Vb ≤ 2.0 V

Maximum transfer rate = 1/{-Cb × Rb × ln (1 - 1.5/Vb)} × 3 [bps]
Baud rate error (theoretical value) =
(1/transfer rate × 2 - {-Cb × Rb × ln (1 - 1.5/Vb)} / (1/transfer rate) × number of transferred bits)

Note 7. This value as an example is calculated when the conditions described in the "Conditions" column are met. Refer to Note 6 above to calculate the maximum transfer rate under conditions of the customer.

Caution Select the TTL input buffer for the RxDq pin and the N-ch open drain output (V_{DD} tolerance) mode for the TxDq pin by using port input mode register g (PIMg) and port output mode register g (POMg). For V_{IH} and V_{IL}, see the DC characteristics with TTL input buffer selected.

Remarks 1. R_b[Ω]:Communication line (TxDq) pull-up resistance,
C_b[F]: Communication line (TxDq) load capacitance, V_b[V]: Communication line voltage

2. q: UART number (q = 0, 1), g: PIM and POM numbers (g = 0, 1)

3. f_{MCK}: Serial array unit operation clock frequency
(Operation clock to be set by the CKSmn bit of serial mode register mn (SMRmn).
m: Unit number, n: Channel number (mn = 00 to 03))

UART mode connection diagram (during communication at different potential)

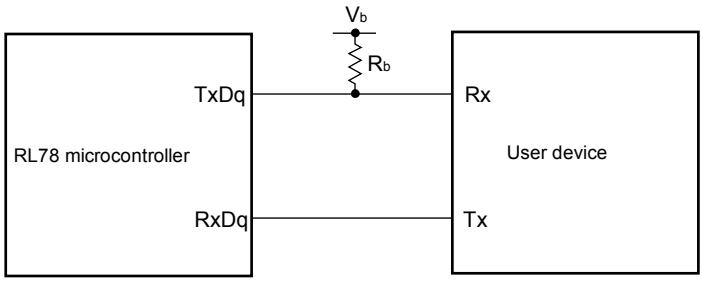

UART mode bit width (during communication at different potential) (reference)

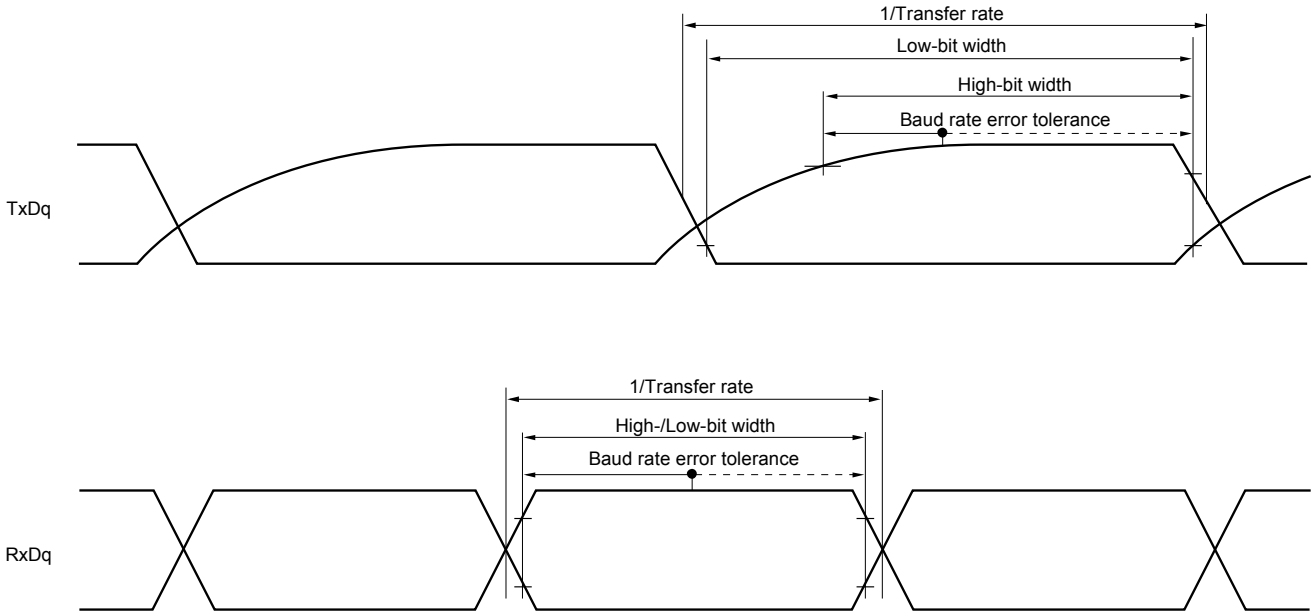

Remarks1. R_b[Ω]:Communication line (TxDq) pull-up resistance, V_b[V]: Communication line voltage

2. q: UART number (q = 0, 1), g: PIM and POM number (g = 0, 1)

(8) Communication at different potential (2.5 V) (CSI mode) (master mode: SCKp... internal clock output, supporting CSI00 only)

(T_A = –40 to +85°C, 2.7 V ≤ V_{DD} = V_{DD_RF} = AV_{DD_RF} ≤ 3.6 V, V_{SS} = V_{SS_RF} = AV_{SS_RF} = 0 V)

Parameter	Symbol	Conditions	HS (high-speed main) Mode		LS (low-speed main) Mode		LV (low-voltage main) Mode		Unit
			MIN.	MAX.	MIN.	MAX.	MIN.	MAX.	
SCKp cycle time	t_{KCY1}	t_{KCY1} ≥ 2/f_{CLK} 2.7 V ≤ V_{DD} ≤ 3.6 V 2.3 V ≤ V_b ≤ 2.7 V C_b = 20 pF, R_b = 2.7 kΩ	300		1150		1150		ns
SCKp high-level width	t_{KH1}	2.7 V ≤ V_{DD} ≤ 3.6 V 2.3 V ≤ V_b ≤ 2.7 V C_b = 20 pF, R_b = 2.7 kΩ	t_{KCY1}/2 – 120		t_{KCY1}/2 – 120		t_{KCY1}/2 – 120		ns
SCKp low-level width	t_{KL1}	2.7 V ≤ V_{DD} ≤ 3.6 V 2.3 V ≤ V_b ≤ 2.7 V C_b = 20 pF, R_b = 2.7 kΩ	t_{KCY1}/2 – 10		t_{KCY1}/2 – 50		t_{KCY1}/2 – 50		ns
SIp setup time (to SCKp↑) Note 1	t_{SIK1}	2.7 V ≤ V_{DD} ≤ 3.6 V 2.3 V ≤ V_b ≤ 2.7 V C_b = 20 pF, R_b = 2.7 kΩ	121		479		479		ns
SIp hold time (from SCKp↑) Note 1	t_{KSI1}	2.7 V ≤ V_{DD} ≤ 3.6 V 2.3 V ≤ V_b ≤ 2.7 V C_b = 20 pF, R_b = 2.7 kΩ	10		10		10		ns
Delay time from SCKp↓ to SOp output Note 1	t_{KSO1}	2.7 V ≤ V_{DD} ≤ 3.6 V 2.3V ≤ V_b ≤ 2.7 V C_b = 20 pF, R_b = 2.7 kΩ		130		130		130	ns
SIp setup time (to SCKp↓) Note 2	t_{SIK1}	2.7 V ≤ V_{DD} ≤ 3.6 V 2.3 V ≤ V_b ≤ 2.7 V C_b = 20 pF, R_b = 2.7 kΩ	33		110		110		ns
SIp hold time (from SCKp↓) Note 2	t_{KSI1}	2.7 V ≤ V_{DD} ≤ 3.6 V 2.3 V ≤ V_b ≤ 2.7 V C_b = 20 pF, R_b = 2.7 kΩ	10		10		10		ns
Delay time from SCKp↑ to SOp output Note 2	t_{KSO1}	2.7 V ≤ V_{DD} ≤ 3.6 V 2.3 V ≤ V_b ≤ 2.7 V C_b = 20 pF, R_b = 2.7 kΩ		10		10		10	ns

Notes 1. When DAPmn = 0 and CKPmn = 0, or DAPmn = 1 and CKPmn = 1.

2. When DAPmn = 0 and CKPmn = 1, or DAPmn = 1 and CKPmn = 0.

Caution Select the TTL input buffer for the SIp pin and the N-ch open drain output (V_{DD} tolerance) mode for the SOp pin and SCKp pin by using port input mode register g (PIMg) and port output mode register g (POMg). For V_{IH} and V_{IL}, see the DC characteristics with TTL input buffer selected.

Remarks 1. R_b[Ω]:Communication line (SCKp, SOp) pull-up resistance, C_b[F]: Communication line (SCKp, SOp) load capacitance, V_b[V]: Communication line voltage

2. p: CSI number (p = 00), m: Unit number (m = 0), n: Channel number (n = 0), g: PIM and POM number (g = 1)

3. f_{MCK}: Serial array unit operation clock frequency (Operation clock to be set by the CKSmn bit of serial mode register mn (SMRmn). m: Unit number, n: Channel number (mn = 00))

(9) Communication at different potential (1.8 V, 2.5 V) (CSI mode: master mode, SCKp... internal clock output)

(T_A = –40 to +85°C, 1.8 V ≤ V_{DD} = V_{DD_RF} = AV_{DD_RF} ≤ 3.6 V, V_{SS} = V_{SS_RF} = AV_{SS_RF} = 0 V) **(1/2)**

Parameter	Symbol	Conditions		HS (high-speed main) Mode		LS (low-speed main) Mode		LV (low-voltage main) Mode		Unit
				MIN.	MAX.	MIN.	MAX.	MIN.	MAX.	
SCKp cycle time Note 1	t_{KCY1}	t_{KCY1} ≥ 4/f_{CLK}	2.7 V ≤ V_{DD} ≤ 3.6 V 2.3 V ≤ V_b ≤ 2.7 V C_b = 30 pF, R_b = 2.7 kΩ	500		1150		1150		ns
			2.4 V ≤ V_{DD} < 3.3 V 1.6 V ≤ V_b ≤ 2.0 V C_b = 30 pF, R_b = 5.5 kΩ	1150		1150		1150		ns
			1.8 V ≤ V_{DD} < 3.3 V 1.6 V ≤ V_b ≤ 2.0 V Note 3 C_b = 30 pF, R_b = 5.5 kΩ	–		1150		1150		ns
SCKp high-level width Note 1	t_{KH1}	2.7 V ≤ V_{DD} ≤ 3.6 V, 2.3 V ≤ V_b ≤ 2.7 V C_b = 30 pF, R_b = 2.7 kΩ		t_{KCY1}/2-170		t_{KCY1}/2-170		t_{KCY1}/2-170		ns
		2.4 V ≤ V_{DD} < 3.3 V, 1.6 V ≤ V_b ≤ 2.0 V C_b = 30 pF, R_b = 5.5 kΩ		t_{KCY1}/2-458		t_{KCY1}/2-458		t_{KCY1}/2-458		ns
		1.8 V ≤ V_{DD} < 3.3 V, 1.6 V ≤ V_b ≤ 2.0 V Note 3 C_b = 30 pF, R_b = 5.5 kΩ		–		t_{KCY1}/2 – 458		t_{KCY1}/2 – 458		ns
SCKp low-level width Note 1	t_{KL1}	2.7 V ≤ V_{DD} ≤ 3.6 V, 2.3 V ≤ V_b ≤ 2.7 V C_b = 30 pF, R_b = 2.7 kΩ		t_{KCY1}/2 – 18		t_{KCY1}/2 – 50		t_{KCY1}/2 – 50		ns
		2.4 V ≤ V_{DD} < 3.3 V, 1.6 V ≤ V_b ≤ 2.0 V C_b = 30 pF, R_b = 5.5 kΩ		t_{KCY1}/2 – 50		t_{KCY1}/2 – 50		t_{KCY1}/2 – 50		ns
		1.8 V ≤ V_{DD} < 3.3 V, 1.6 V ≤ V_b ≤ 2.0 V Note 3 C_b = 30 pF, R_b = 5.5 kΩ		–		t_{KCY1}/2 – 50		t_{KCY1}/2 – 50		ns
SIp setup time (to SCKp↑) Note 1, 2	t_{SIK1}	2.7 V ≤ V_{DD} ≤ 3.6 V, 2.3 V ≤ V_b ≤ 2.7 V C_b = 30 pF, R_b = 2.7 kΩ		177		479		479		ns
		2.4 V ≤ V_{DD} < 3.3 V, 1.6 V ≤ V_b ≤ 2.0 V C_b = 30 pF, R_b = 5.5 kΩ		479		479		479		ns
		1.8 V ≤ V_{DD} < 3.3 V, 1.6 V ≤ V_b ≤ 2.0 V Note 3 C_b = 30 pF, R_b = 5.5 kΩ		–		479		479		ns
SIp hold time (from SCKp↑) Note 1, 2	t_{KSI1}	2.7 V ≤ V_{DD} ≤ 3.6 V, 2.3 V ≤ V_b ≤ 2.7 V C_b = 30 pF, R_b = 2.7 kΩ		19		19		19		ns
		2.4 V ≤ V_{DD} < 3.3 V, 1.6 V ≤ V_b ≤ 2.0 V C_b = 30 pF, R_b = 5.5 kΩ		19		19		19		ns
		1.8 V ≤ V_{DD} < 3.3 V, 1.6 V ≤ V_b ≤ 2.0 V Note 3 C_b = 30 pF, R_b = 5.5 kΩ		–		19		19		ns

Notes 1. Supporting CSI00 and CSI20.

2. When DAPmn = 0 and CKPmn = 0, or DAPmn = 1 and CKPmn = 1.

3. Use it with V_{DD} ≥ V_b.

(**Caution** are listed on the next page.)

(T_A = –40 to +85°C, 1.8 V ≤ V_{DD} = V_{DD_RF} = AV_{DD_RF} ≤ 3.6 V, V_{SS} = V_{SS_RF} = AV_{SS_RF} = 0 V) **(2/2)**

Parameter	Symbol	Conditions	HS (high-speed main) Mode		LS (low-speed main) Mode		LV (low-voltage main) Mode		Unit
			MIN.	MAX.	MIN.	MAX.	MIN.	MAX.	
Delay time from SCKp↓ to SOp output Note 1, 3	t_{KSO1}	2.7 V ≤ V_{DD} ≤ 3.6 V 2.3 V ≤ V_b ≤ 2.7 V C_b = 30 pF, R_b = 2.7 kΩ		195		195		195	ns
		2.4 V ≤ V_{DD} < 3.3 V 1.6 V ≤ V_b ≤ 2.0 V C_b = 30 pF, R_b = 5.5 kΩ		483		483		483	ns
		1.8 V ≤ V_{DD} < 3.3 V 1.6 V ≤ V_b ≤ 2.0 V Note 5 C_b = 30 pF, R_b = 5.5 kΩ		–		483		483	ns
SIp setup time (to SCKp↓) Note 2, 4	t_{SIK1}	2.7 V ≤ V_{DD} ≤ 3.6 V 2.3 V ≤ V_b ≤ 2.7 V C_b = 30 pF, R_b = 2.7 kΩ	44		110		110		ns
		2.4 V ≤ V_{DD} < 3.3 V 1.6 V ≤ V_b ≤ 2.0 V C_b = 30 pF, R_b = 5.5 kΩ	110		110		110		ns
		1.8 V ≤ V_{DD} < 3.3 V 1.6 V ≤ V_b ≤ 2.0 V Note 5 C_b = 30 pF, R_b = 5.5 kΩ	–		110		110		ns
SIp hold time (from SCKp↓) Note 2, 4	t_{KSI1}	2.7 V ≤ V_{DD} ≤ 3.6 V 2.3 V ≤ V_b ≤ 2.7 V C_b = 30 pF, R_b = 2.7 kΩ	19		19		19		ns
		2.4 V ≤ V_{DD} < 3.3 V 1.6 V ≤ V_b ≤ 2.0 V C_b = 30 pF, R_b = 5.5 kΩ	19		19		19		ns
		1.8 V ≤ V_{DD} < 3.3 V 1.6 V ≤ V_b ≤ 2.0 V Note 5 C_b = 30 pF, R_b = 5.5 kΩ	–		19		19		ns
Delay time from SCKp↑ to SOp output Note 2, 4	t_{KSO1}	2.7 V ≤ V_{DD} ≤ 3.6 V 2.3 V ≤ V_b ≤ 2.7 V C_b = 30 pF, R_b = 2.7 kΩ		25		25		25	ns
		2.4 V ≤ V_{DD} < 3.3 V 1.6 V ≤ V_b ≤ 2.0 V C_b = 30 pF, R_b = 5.5 kΩ		25		25		25	ns
		1.8 V ≤ V_{DD} < 3.3 V 1.6 V ≤ V_b ≤ 2.0 V Note 5 C_b = 30 pF, R_b = 5.5 kΩ		–		25		25	ns

Notes 1. Supporting CSI00 and CSI20.

2. Supporting CSI00 only.

3. When DAPmn = 0 and CKPmn = 0, or DAPmn = 1 and CKPmn = 1.

4. When DAPmn = 0 and CKPmn = 1, or DAPmn = 1 and CKPmn = 0.

5. Use it with V_{DD} ≥ V_b.

Caution Select the TTL input buffer for the SIp pin and the N-ch open drain output (V_{DD} tolerance) mode for the SOp pin and SCKp pin by using port input mode register g (PIMg) and port output mode register g (POMg). For V_{IH} and V_{IL}, see the DC characteristics with TTL input buffer selected.

(**Remarks** are listed on the next page.)

CSI mode connection diagram (during communication at different potential)

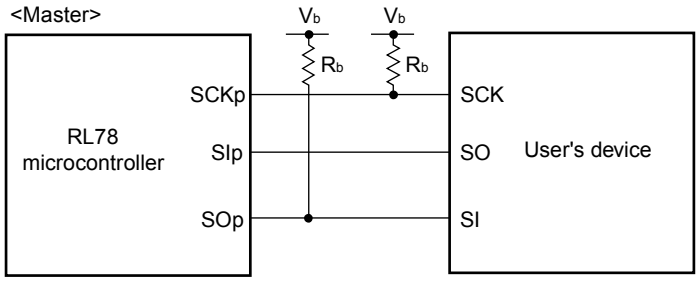

Remarks 1. R_b[Ω]:Communication line (SCKp, SOp) pull-up resistance, C_b[F]: Communication line (SCKp, SOp) load capacitance, V_b[V]: Communication line voltage

2. p: CSI number (p = 00), m: Unit number (m = 0), n: Channel number (n = 0), g: PIM and POM number (g = 1)

3. f_{MCK} : Operation clock frequency of the serial array unit
(Operation clock to be set by the CKSmn bit of the serial mode register mn (SMRmn). m: Unit number, n: Channel number (mn = 00))

CSI mode serial transfer timing (master mode) (during communication at different potential)
(When DAPmn = 0 and CKPmn = 0, or DAPmn = 1 and CKPmn = 1.)

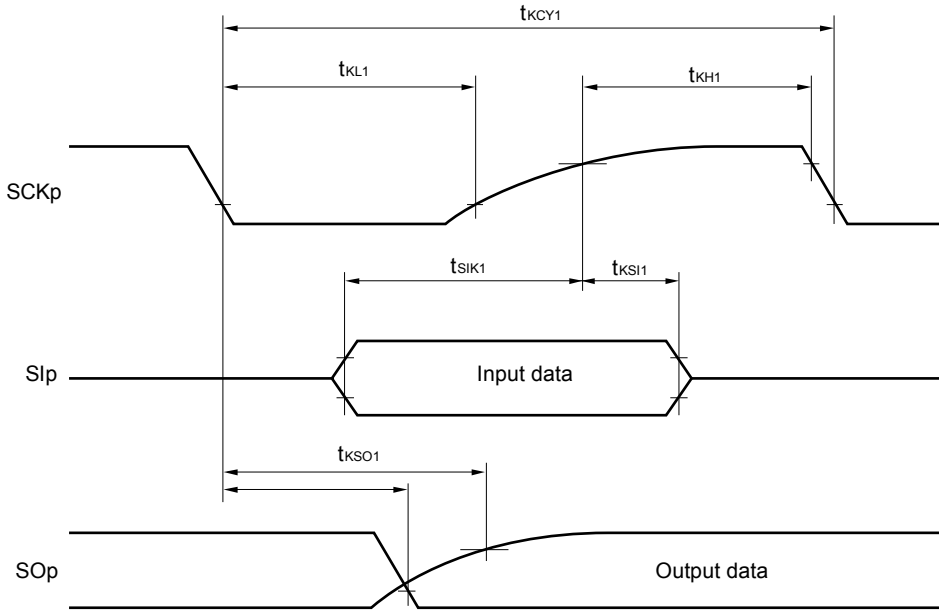

CSI mode serial transfer timing (master mode) (during communication at different potential)
(When DAPmn = 0 and CKPmn = 1, or DAPmn = 1 and CKPmn = 0.)

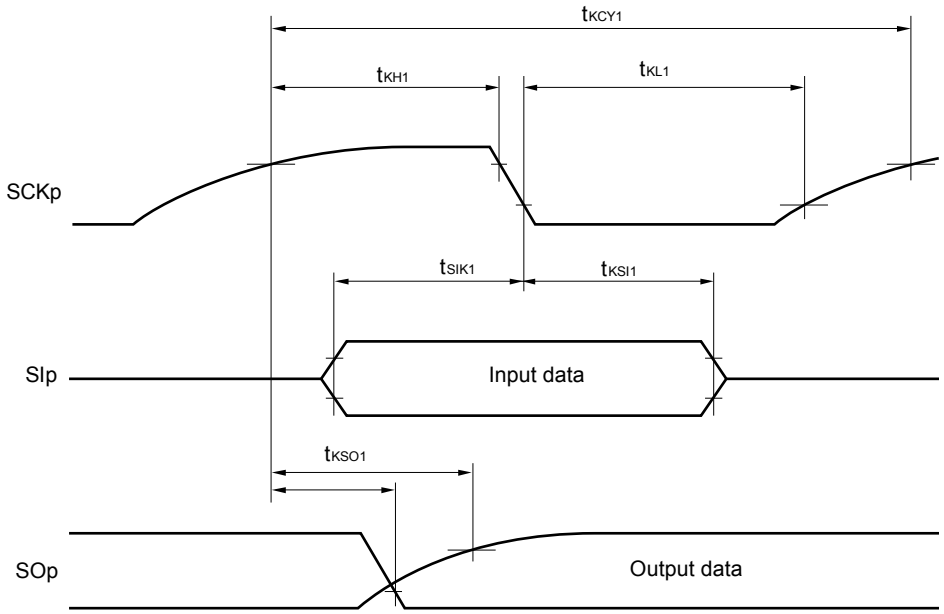

Caution **Select the TTL input buffer for the SIp pin and the N-ch open drain output (V_{DD} tolerance) mode for the SOp pin and SCKp pin by using port input mode register g (PIMg) and port output mode register g (POMg).**

Remark p: CSI number (p = 00), m: Unit number (m = 0), n: Channel number (n = 0), g: PIM and POM number (g = 1)

(10) Communication at different potential (1.8 V, 2.5 V) (CSI mode) (slave mode, SCKp... external clock input)

(T_A = –40 to +85°C, 1.8 V ≤ V_{DD} = V_{DD_RF} = AV_{DD_RF} ≤ 3.6 V, V_{SS} = V_{SS_RF} = AV_{SS_RF} = 0 V) **(1/2)**

Parameter	Symbol	Conditions		HS (high-speed main) Mode		LS (low-speed main) Mode		LV (low-voltage main) Mode		Unit
				MIN.	MAX.	MIN.	MAX.	MIN.	MAX.	
SCKp cycle time Note 1	t_{KCY2}	2.7 V ≤ V_{DD} ≤ 3.6 V 2.3 V ≤ V_b ≤ 2.7 V	24 MHz < f_{MCK}	20/ f_{MCK}		–		–		ns
			20 MHz < f_{MCK} ≤ 24 MHz	16/ f_{MCK}		–		–		ns
			16 MHz < f_{MCK} ≤ 20 MHz	14/ f_{MCK}		–		–		ns
			8 MHz < f_{MCK} ≤ 16 MHz	12/ f_{MCK}		–		–		ns
			4 MHz < f_{MCK} ≤ 8 MHz	8/f_{MCK}		16/ f_{MCK}		–		ns
			f_{MCK} ≤ 4MHz	6/f_{MCK}		10/ f_{MCK}		10/ f_{MCK}		ns
		2.4 V ≤ V_{DD} < 3.3 V 1.6 V ≤ V_b ≤ 2.0 V	24 MHz < f_{MCK}	48/ f_{MCK}		–		–		ns
			20 MHz < f_{MCK} ≤ 24 MHz	36/ f_{MCK}		–		–		ns
			16 MHz < f_{MCK} ≤ 20 MHz	32/ f_{MCK}		–		–		ns
			8 MHz < f_{MCK} ≤ 16 MHz	26/ f_{MCK}		–		–		ns
			4 MHz < f_{MCK} ≤ 8 MHz	16/ f_{MCK}		16/ f_{MCK}		–		ns
			f_{MCK} ≤ 4MHz	10/ f_{MCK}		10/ f_{MCK}		10/ f_{MCK}		ns
		1.8 V ≤ V_{DD} < 3.3 V 1.6 V ≤ V_b ≤ 2.0 V Note 2	24 MHz < f_{MCK}	–		–		–		ns
			20 MHz < f_{MCK} ≤ 24 MHz	–		–		–		ns
			16 MHz < f_{MCK} ≤ 20 MHz	–		–		–		ns
			8 MHz < f_{MCK} ≤ 16 MHz	–		–		–		ns
			4 MHz < f_{MCK} ≤ 8 MHz	–		16/ f_{MCK}		–		ns
			f_{MCK} ≤ 4MHz	–		10/ f_{MCK}		10/ f_{MCK}		ns

(**Notes** and **Caution** are listed on the next page.)

(T_A = –40 to +85°C, 1.8 V ≤ V_{DD} = V_{DD_RF} = AV_{DD_RF} ≤ 3.6 V, V_{SS} = V_{SS_RF} = AV_{SS_RF} = 0 V) **(2/2)**

Parameter	Symbol	Conditions	HS (high-speed main) Mode		LS (low-speed main) Mode		LV (low-voltage main) Mode		Unit
			MIN.	MAX.	MIN.	MAX.	MIN.	MAX.	
SCKp high-/low-level width	t_{KH2}, t_{KL2}	2.7 V ≤ V_{DD} ≤ 3.6 V 2.3 V ≤ V_b ≤ 2.7 V	t_{KCY2}/2 – 18		t_{KCY2}/2 – 50		t_{KCY2}/2 – 50		ns
		2.4 V ≤ V_{DD} < 3.3 V 1.6 V ≤ V_b ≤ 2.0 V	t_{KCY2}/2 – 50		t_{KCY2}/2 – 50		t_{KCY2}/2 – 50		ns
		1.8 V ≤ V_{DD}<3.3 V 1.6 V ≤ V_b ≤ 2.0 V Note 2	–		t_{KCY2}/2 – 50		t_{KCY2}/2 – 50		ns
SIp setup time (to SCKp↑) Note 3	t_{SIK2}	2.7 V ≤ V_{DD} ≤ 3.6 V 2.3 V ≤ V_b ≤ 4.0 V	1/f_{MCK} + 20		1/f_{MCK} + 30		1/f_{MCK} + 30		ns
		2.4 V ≤ V_{DD} < 3.3 V 1.6 V ≤ V_b ≤ 2.0 V	1/f_{MCK} + 30		1/f_{MCK} + 30		1/f_{MCK} + 30		ns
		1.8 V ≤ V_{DD}<3.3 V 1.6 V ≤ V_b ≤ 2.0 V Note 2	–		1/f_{MCK} + 30		1/f_{MCK} + 30		ns
SIp hold time (from SCKp↑) Note 3	t_{KSI2}	2.7 V ≤ V_{DD} ≤ 3.6 V 2.3 V ≤ V_b ≤ 4.0 V	1/f_{MCK} + 31		1/f_{MCK} + 31		1/f_{MCK} + 31		ns
		2.4 V ≤ V_{DD} < 3.3 V 1.6 V ≤ V_b ≤ 2.0 V	1/f_{MCK} + 31		1/f_{MCK} + 31		1/f_{MCK} + 31		ns
		1.8 V ≤ V_{DD}<3.3 V 1.6 V ≤ V_b ≤ 2.0 V Note 2	–		1/f_{MCK} + 31		1/f_{MCK} + 31		ns
Delay time from SCKp↓ to SOp output Note 4	t_{KSO2}	2.7 V ≤ V_{DD} < 3.6 V 2.3 V ≤ V_b ≤ 2.7 V C_b = 30 pF, R_b = 2.7 kΩ		2/f_{MCK} + 214		2/f_{MCK} + 573		2/f_{MCK} + 573	ns
		2.4 V ≤ V_{DD} < 3.3 V 1.6 V ≤ V_b ≤ 2.0 V C_b = 30 pF, R_b = 5.5 kΩ		2/f_{MCK} + 573		2/f_{MCK} + 573		2/f_{MCK} + 573	ns
		1.8 V ≤ V_{DD}< 3.3 V 1.6 V ≤ V_b ≤ 2.0 V Note 2 C_b = 30 pF, R_b = 5.5 kΩ		–		2/f_{MCK} + 573		2/f_{MCK} + 573	ns

Notes 1. Transfer rate in the SNOOZE mode : MAX. 1 Mbps

2. Use it with V_{DD} ≥ V_b.

3. When DAPmn = 0 and CKPmn = 0, or DAPmn = 1 and CKPmn = 1. The SIp time becomes "to SCKp↓" when DAPmn = 0 and CKPmn = 1, or DAPmn = 1 and CKPmn = 0.

4. When DAPmn = 0 and CKPmn = 0, or DAPmn = 1 and CKPmn = 1. The delay time to SOp output becomes "from SCKp↑" when DAPmn = 0 and CKPmn = 1, or DAPmn = 1 and CKPmn = 0.

Caution Select the TTL input buffer for the SIp pin and SCKp pin and the N-ch open drain output (V_{DD} tolerance) mode for the SOp pin by using port input mode register g (PIMg) and port output mode register g (POMg). For V_{IH} and V_{IL}, see the DC characteristics with TTL input buffer selected.

CSI mode connection diagram (during communication at different potential)

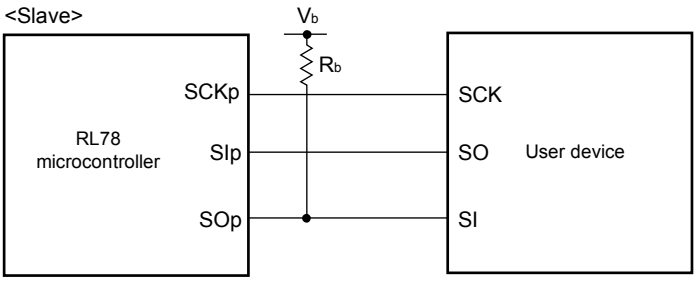

Remarks 1. R_b[Ω]:Communication line (SOp) pull-up resistance, C_b[F]: Communication line (SOp) load capacitance, V_b[V]: Communication line voltage

2. p: CSI number (p = 00, 20), m: Unit number, n: Channel number (mn = 00, 10), g: PIM and POM number (g = 0, 1)

3. f_{MCK}: Serial array unit operation clock frequency
(Operation clock to be set by the CKSmn bit of serial mode register mn (SMRmn).
m: Unit number, n: Channel number (mn = 00, 10))

CSI mode serial transfer timing (slave mode) (during communication at different potential)
(When DAPmn = 0 and CKPmn = 0, or DAPmn = 1 and CKPmn = 1.)

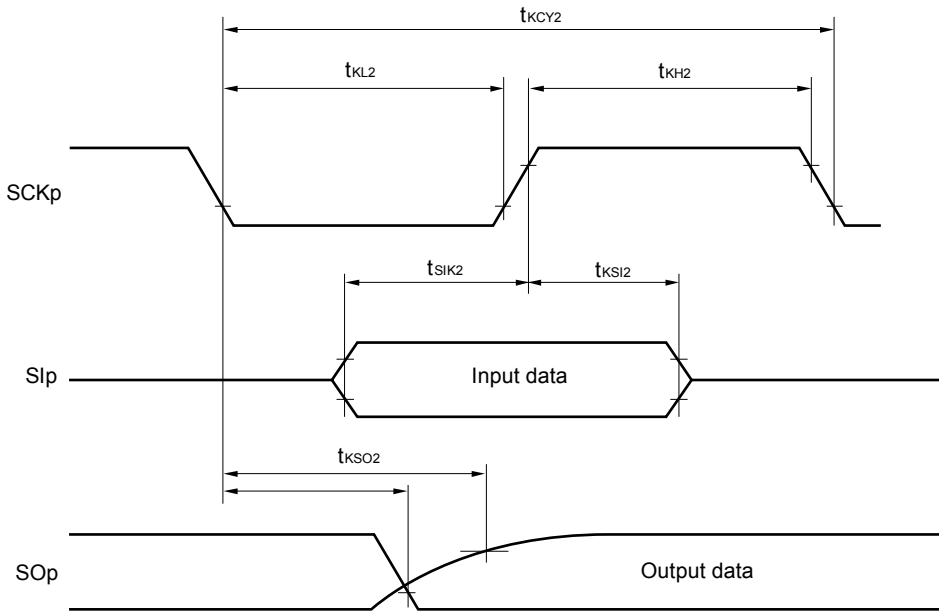

CSI mode serial transfer timing (slave mode) (during communication at different potential)
(When DAPmn = 0 and CKPmn = 1, or DAPmn = 1 and CKPmn = 0.)

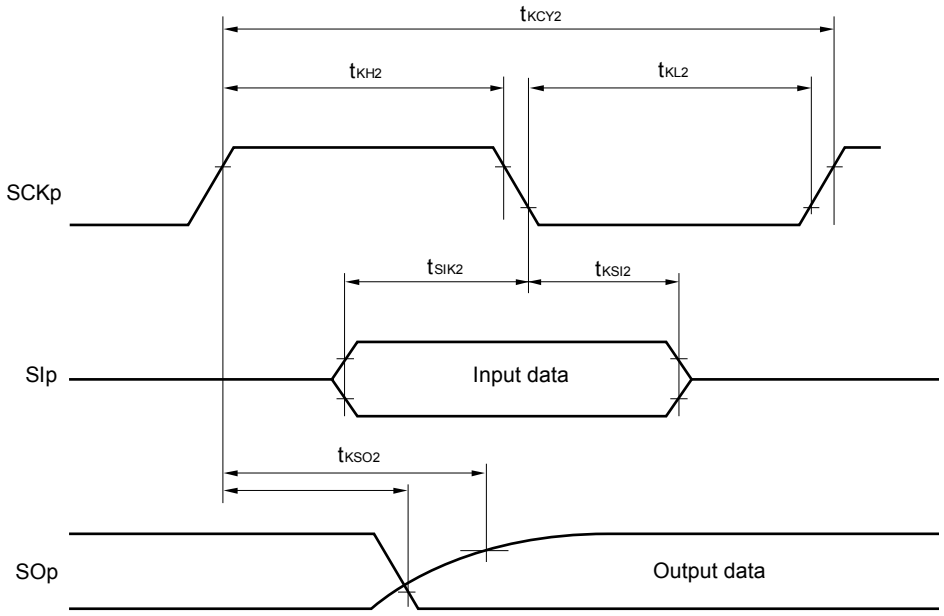

Caution Select the TTL input buffer for the SIp pin and the N-ch open drain output (V_{DD} tolerance) mode for the SOp pin and SCKp pin by using port input mode register g (PIMg) and port output mode register g (POMg).

Remark p: CSI number (p = 00), m: Unit number (m = 0), n: Channel number (n = 0), g: PIM and POM number (g = 1)

(11) Communication at different potential (1.8 V, 2.5 V) (simplified I²C mode)

(T_A = –40 to +85°C, 1.8 V ≤ V_{DD} = V_{DD_RF} = AV_{DD_RF} ≤ 3.6 V, V_{SS} = V_{SS_RF} = AV_{SS_RF} = 0 V) **(1/2)**

Parameter	Symbol	Conditions	HS (high-speed main) Mode		LS (low-speed main) Mode		LV (low-voltage main) Mode		Unit
			MIN.	MAX.	MIN.	MAX.	MIN.	MAX.	
SCLr clock frequency	f_{SCL}	2.7 V ≤ V_{DD} ≤ 3.6 V 2.3 V ≤ V_b ≤ 2.7 V C_b = 50 pF, R_b = 2.7 kΩ		1000 Note 1		300 Note 5		300 Note 5	kHz
		2.7 V ≤ V_{DD} ≤ 3.6 V 2.3 V ≤ V_b ≤ 2.7 V C_b = 100 pF, R_b = 2.7 kΩ		400 Note 1		300 Note 5		300 Note 5	kHz
		2.4 V ≤ V_{DD} < 3.3 V 1.6 V ≤ V_b ≤ 2.0 V C_b = 100 pF, R_b = 5.5 kΩ		300 Note 1		300 Note 1		300 Note 1	kHz
		1.8 V ≤ V_{DD} < 3.3 V 1.6 V ≤ V_b ≤ 2.0 V Note 2 C_b = 100 pF, R_b = 5.5 kΩ		–		300 Note 1		300 Note 1	kHz
Hold time when SCLr = "L"	t_{LOW}	2.7 V ≤ V_{DD} ≤ 3.6 V 2.3 V ≤ V_b ≤ 2.7 V C_b = 50 pF, R_b = 2.7 kΩ	475		1550		1550		ns
		2.7 V ≤ V_{DD} ≤ 3.6 V 2.3 V ≤ V_b ≤ 2.7 V C_b = 100 pF, R_b = 2.7 kΩ	1150		1550		1550		ns
		2.4 V ≤ V_{DD} < 3.3 V 1.6 V ≤ V_b ≤ 2.0 V C_b = 100 pF, R_b = 5.5 kΩ	1150		1550		1550		ns
		1.8 V ≤ V_{DD} < 3.3 V 1.6 V ≤ V_b ≤ 2.0 V Note 2 C_b = 100 pF, R_b = 5.5 kΩ	–		1550		1550		ns
Hold time when SCLr = "H"	t_{HIGH}	2.7 V ≤ V_{DD} ≤ 3.6 V 2.3 V ≤ V_b ≤ 2.7 V C_b = 50 pF, R_b = 2.7 kΩ	200		610		610		ns
		2.7 V ≤ V_{DD} ≤ 3.6 V 2.3 V ≤ V_b ≤ 2.7 V C_b = 100 pF, R_b = 2.7 kΩ	600		610		610		ns
		2.4 V ≤ V_{DD} < 3.3 V 1.6 V ≤ V_b ≤ 2.0 V C_b = 100 pF, R_b = 5.5 kΩ	610		610		610		ns
		1.8 V ≤ V_{DD} < 3.3 V 1.6 V ≤ V_b ≤ 2.0 V Note 2 C_b = 100 pF, R_b = 5.5 kΩ	–		610		610		ns

(**Note, Caution** and **Remarks** are listed on the next page.)

(T_A = –40 to +85°C, 1.8 V ≤ V_{DD} = V_{DD_RF} = AV_{DD_RF} ≤ 3.6 V, V_{SS} = V_{SS_RF} = AV_{SS_RF} = 0 V) **(2/2)**

Parameter	Symbol	Conditions	HS (high-speed main) Mode		LS (low-speed main) Mode		LV (low-voltage main) Mode		Unit
			MIN.	MAX.	MIN.	MAX.	MIN.	MAX.	
Data setup time (reception)	$t_{SU:DAT}$	2.7 V ≤ V_{DD} ≤ 3.6 V 2.3 V ≤ V_b ≤ 2.7 V C_b = 50 pF, R_b = 2.7 kΩ	$1/f_{MCK}$ + 135 Note 3		$1/f_{MCK}$ + 190 Note 3		$1/f_{MCK}$ + 190 Note 3		ns
		2.7 V ≤ V_{DD} ≤ 3.6 V 2.3 V ≤ V_b ≤ 2.7 V C_b = 100 pF, R_b = 2.7 kΩ	$1/f_{MCK}$ + 190 Note 3		$1/f_{MCK}$ + 190 Note 3		$1/f_{MCK}$ + 190 Note 3		ns
		2.4 V ≤ V_{DD} < 3.3 V 1.6 V ≤ V_b ≤ 2.0 V C_b = 100 pF, R_b = 5.5 kΩ	$1/f_{MCK}$ + 190 Note 3		$1/f_{MCK}$ + 190 Note 3		$1/f_{MCK}$ + 190 Note 3		ns
		1.8 V ≤ V_{DD} < 3.3 V 1.6 V ≤ V_b ≤ 2.0 V Note 2 C_b = 100 pF, R_b = 5.5 kΩ	–		$1/f_{MCK}$ + 190 Note 3		$1/f_{MCK}$ + 190 Note 3		ns
Data hold time (transmission)	$t_{HD:DAT}$	2.7 V ≤ V_{DD} ≤ 3.6 V 2.3 V ≤ V_b ≤ 2.7 V C_b = 50 pF, R_b = 2.7 kΩ	0 Note 4	305	0 Note 4	305	0 Note 4	305	ns
		2.7 V ≤ V_{DD} ≤ 3.6 V 2.3 V ≤ V_b ≤ 2.7 V C_b = 100 pF, R_b = 2.7 kΩ	0 Note 4	355	0 Note 4	355	0 Note 4	355	ns
		2.4 V ≤ V_{DD} < 3.3 V 1.6 V ≤ V_b ≤ 2.0 V C_b = 100 pF, R_b = 5.5 kΩ	0 Note 4	405	0 Note 4	405	0 Note 4	405	ns
		1.8 V ≤ V_{DD} < 3.3 V 1.6 V ≤ V_b ≤ 2.0 V Note 2 C_b = 100 pF, R_b = 5.5 kΩ	–	–	0 Note 4	405	0 Note 4	405	ns

Notes 1. The value must also be $f_{MCK}/4$ or lower.

2. Use it with $V_{DD} \geq V_b$.

3. Set the f_{MCK} value to keep the hold time of SCLr = "L" and SCLr = "H".

Caution Select the TTL input buffer and the N-ch open drain output (V_{DD} tolerance) mode for the SDAr pin and the N-ch open drain output (V_{DD} tolerance) mode for the SCLr pin by using port input mode register g (PIMg) and port output mode register g (POMg). For V_{IH} and V_{IL}, see the DC characteristics with TTL input buffer selected.

Simplified I²C mode connection diagram (during communication at different potential)

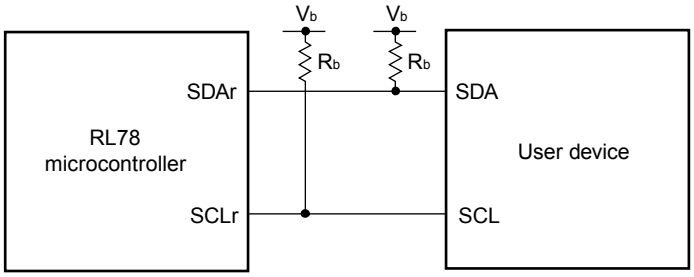

Simplified I²C mode serial transfer timing (during communication at different potential)

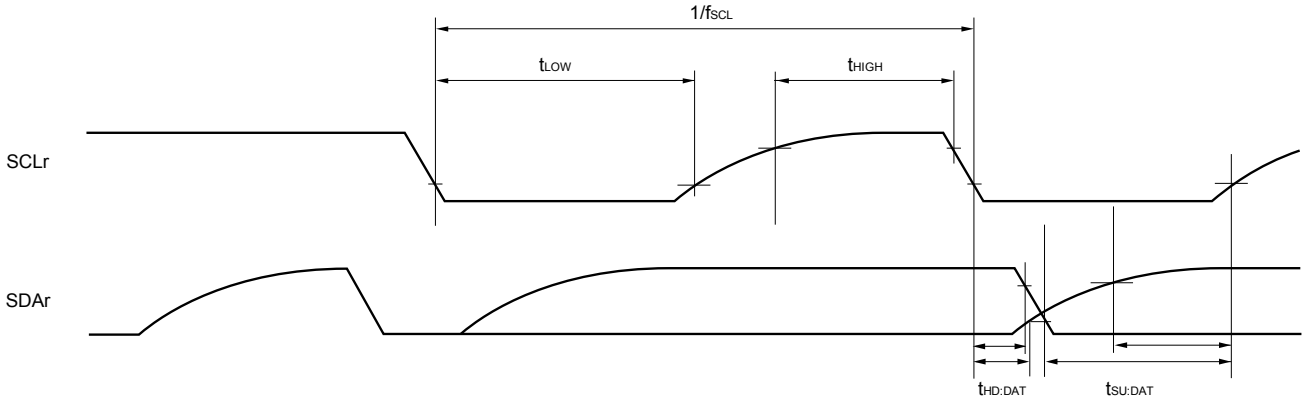

Remarks 1. R_b[Ω]:Communication line (SDAr, SCLr) pull-up resistance, C_b[F]: Communication line (SDAr, SCLr) load capacitance, V_b[V]: Communication line voltage

2. r: IIC number (r = 00, 10), g: PIM, POM number (g = 0, 1)

3. f_{MCK}: Serial array unit operation clock frequency
(Operation clock to be set by the CKSmn bit of serial mode register mn (SMRmn). m: Unit number, n: Channel number (mn = 00, 02))

30.7.2 Serial interface IICA

(1) I^2C standard mode

(T_A = –40 to +85°C, 1.6 V ≤ V_{DD} = V_{DD_RF} = AV_{DD_RF} ≤ 3.6 V, V_{SS} = V_{SS_RF} = AV_{SS_RF} = 0 V)

Parameter	Symbol	Conditions		HS (high-speed main) Mode		LS (low-speed main) Mode		LV (low-voltage main) Mode		Unit
				MIN.	MAX.	MIN.	MAX.	MIN.	MAX.	
SCLA0 clock frequency	f_{SCL}	Standard mode: f_{CLK} ≥ 1 MHz	2.7 V ≤ V_{DD} ≤ 3.6 V	0	100	0	100	0	100	kHz
			2.4 V ≤ V_{DD} ≤ 3.6 V	0	100	0	100	0	100	kHz
			1.8 V ≤ V_{DD} ≤ 3.6 V	–		0	100	0	100	kHz
			1.6 V ≤ V_{DD} ≤ 3.6 V	–		–		0	100	kHz
Setup time of restart condition	$t_{SU:STA}$	2.7 V ≤ V_{DD} ≤ 3.6 V		4.7		4.7		4.7		μs
		2.4 V ≤ V_{DD} ≤ 3.6 V		4.7		4.7		4.7		μs
		1.8 V ≤ V_{DD} ≤ 3.6 V		–		4.7		4.7		μs
		1.6 V ≤ V_{DD} ≤ 3.6 V		–		–		4.7		μs
Hold time[Note 1]	$t_{HD:STA}$	2.7 V ≤ V_{DD} ≤ 3.6 V		4.0		4.0		4.0		μs
		2.4 V ≤ V_{DD} ≤ 3.6 V		4.0		4.0		4.0		μs
		1.8 V ≤ V_{DD} ≤ 3.6 V		–		4.0		4.0		μs
		1.6 V ≤ V_{DD} ≤ 3.6 V		–		–		4.0		μs
Hold time when SCLA0 = "L"	t_{LOW}	2.7 V ≤ V_{DD} ≤ 3.6 V		4.7		4.7		4.7		μs
		2.4 V ≤ V_{DD} ≤ 3.6 V		4.7		4.7		4.7		μs
		1.8 V ≤ V_{DD} ≤ 3.6 V		–		4.7		4.7		μs
		1.6 V ≤ V_{DD} ≤ 3.6 V		–		–		4.7		μs
Hold time when SCLA0 = "H"	t_{HIGH}	2.7 V ≤ V_{DD} ≤ 3.6 V		4.0		4.0		4.0		μs
		2.4 V ≤ V_{DD} ≤ 3.6 V		4.0		4.0		4.0		μs
		1.8 V ≤ V_{DD} ≤ 3.6 V		–		4.0		4.0		μs
		1.6 V ≤ V_{DD} ≤ 3.6 V		–		–		4.0		μs
Data setup time (reception)	$t_{SU:DAT}$	2.7 V ≤ V_{DD} ≤ 3.6 V		250		250		250		ns
		2.4 V ≤ V_{DD} ≤ 3.6 V		250		250		250		ns
		1.8 V ≤ V_{DD} ≤ 3.6 V		–		250		250		ns
		1.6 V ≤ V_{DD} ≤ 3.6 V		–		–		250		ns
Data hold time (transmission)[Note 2]	$t_{HD:DAT}$	2.7 V ≤ V_{DD} ≤ 3.6 V		0	3.45	0	3.45	0	3.45	μs
		2.4 V ≤ V_{DD} ≤ 3.6 V		0	3.45	0	3.45	0	3.45	μs
		1.8 V ≤ V_{DD} ≤ 3.6 V		–		0	3.45	0	3.45	μs
		1.6 V ≤ V_{DD} ≤ 3.6 V		–		–		0	3.45	μs
Setup time of stop condition	$t_{SU:STO}$	2.7 V ≤ V_{DD} ≤ 3.6 V		4.0		4.0		4.0		μs
		2.4 V ≤ V_{DD} ≤ 3.6 V		4.0		4.0		4.0		μs
		1.8 V ≤ V_{DD} ≤ 3.6 V		–		4.0		4.0		μs
		1.6 V ≤ V_{DD} ≤ 3.6 V		–		–		4.0		μs
Bus-free time	t_{BUF}	2.7 V ≤ V_{DD} ≤ 3.6 V		4.7		4.7		4.7		μs
		2.4 V ≤ V_{DD} ≤ 3.6 V		4.7		4.7		4.7		μs
		1.8 V ≤ V_{DD} ≤ 3.6 V		–		4.7		4.7		μs
		1.6 V ≤ V_{DD} ≤ 3.6 V		–		–		4.7		μs

(**Notes**, **Caution** and **Remark** are listed on the next page.)

Notes 1. The first clock pulse is generated after this period when the start/restart condition is detected.

2. The maximum value (MAX.) of $t_{HD:DAT}$ is during normal transfer and a wait state is inserted in the $\overline{ACK}$ (acknowledge) timing.

Caution The values in the above table are applied even when bit 2 (PIOR2) in the peripheral I/O redirection register (PIOR) is 1. At this time, the pin characteristics (I_{OH1}, I_{OL1}, V_{OH1}, V_{OL1}) must satisfy the values in the redirect destination.

Remark The maximum value of Cb (communication line capacitance) and the value of Rb (communication line pull-up resistor) at that time in each mode are as follows.
Standard mode: C_b = 400 pF, R_b = 2.7 kΩ

(2) I²C fast mode

(T_A = –40 to +85°C, 1.8 V ≤ V_{DD} = V_{DD_RF} = AV_{DD_RF} ≤ 3.6 V, V_{SS} = V_{SS_RF} = AV_{SS_RF} = 0 V)

Parameter	Symbol	Conditions		HS (high-speed main) Mode		LS (low-speed main) Mode		LV (low-voltage main) Mode		Unit
				MIN.	MAX.	MIN.	MAX.	MIN.	MAX.	
SCLA0 clock frequency	f_{SCL}	Fast mode: f_{CLK} ≥ 3.5 MHz	2.7 V ≤ V_{DD} ≤ 3.6 V	0	400	0	400	0	400	kHz
			2.4 V ≤ V_{DD} ≤ 3.6 V	0	400	0	400	0	400	kHz
			1.8 V ≤ V_{DD} ≤ 3.6 V	–		0	400	0	400	kHz
Setup time of restart condition	$t_{SU:STA}$	2.7 V ≤ V_{DD} ≤ 3.6 V		0.6		0.6		0.6		μs
		2.4 V ≤ V_{DD} ≤ 3.6 V		0.6		0.6		0.6		μs
		1.8 V ≤ V_{DD} ≤ 3.6 V		–		0.6		0.6		μs
Hold time[Note 1]	$t_{HD:STA}$	2.7 V ≤ V_{DD} ≤ 3.6 V		0.6		0.6		0.6		μs
		2.4 V ≤ V_{DD} ≤ 3.6 V		0.6		0.6		0.6		μs
		1.8 V ≤ V_{DD} ≤ 3.6 V		–		0.6		0.6		μs
Hold time when SCLA0 = "L"	t_{LOW}	2.7 V ≤ V_{DD} ≤ 3.6 V		1.3		1.3		1.3		μs
		2.4 V ≤ V_{DD} ≤ 3.6 V		1.3		1.3		1.3		μs
		1.8 V ≤ V_{DD} ≤ 3.6 V		–		1.3		1.3		μs
Hold time when SCLA0 = "H"	t_{HIGH}	2.7 V ≤ V_{DD} ≤ 3.6 V		0.6		0.6		0.6		μs
		2.4 V ≤ V_{DD} ≤ 3.6 V		0.6		0.6		0.6		μs
		1.8 V ≤ V_{DD} ≤ 3.6 V		–		0.6		0.6		μs
Data setup time (reception)	$t_{SU:DAT}$	2.7 V ≤ V_{DD} ≤ 3.6 V		100		100		100		μs
		2.4 V ≤ V_{DD} ≤ 3.6 V		100		100		100		μs
		1.8 V ≤ V_{DD} ≤ 3.6 V		–		100		100		μs
Data hold time (transmission)[Note 2]	$t_{HD:DAT}$	2.7 V ≤ V_{DD} ≤ 3.6 V		0	0.9	0	0.9	0	0.9	μs
		2.4 V ≤ V_{DD} ≤ 3.6 V		0	0.9	0	0.9	0	0.9	μs
		1.8 V ≤ V_{DD} ≤ 3.6 V		–		0	0.9	0	0.9	μs
Setup time of stop condition	$t_{SU:STO}$	2.7 V ≤ V_{DD} ≤ 3.6 V		0.6		0.6		0.6		μs
		2.4 V ≤ V_{DD} ≤ 3.6 V		0.6		0.6		0.6		μs
		1.8 V ≤ V_{DD} ≤ 3.6 V		–		0.6		0.6		μs
Bus-free time	t_{BUF}	2.7 V ≤ V_{DD} ≤ 3.6 V		1.3		1.3		1.3		μs
		2.4 V ≤ V_{DD} ≤ 3.6 V		1.3		1.3		1.3		μs
		1.8 V ≤ V_{DD} ≤ 3.6 V		–		1.3		1.3		μs

Notes 1. The first clock pulse is generated after this period when the start/restart condition is detected.

2. The maximum value (MAX.) of $t_{HD:DAT}$ is during normal transfer and a wait state is inserted in the $\overline{ACK}$ (acknowledge) timing.

Caution The values in the above table are applied even when bit 2 (PIOR2) in the peripheral I/O redirection register (PIOR) is 1. At this time, the pin characteristics (I_{OH1}, I_{OL1}, V_{OH1}, V_{OL1}) must satisfy the values in the redirect destination.

Remark The maximum value of Cb (communication line capacitance) and the value of Rb (communication line pull-up resistor) at that time in each mode are as follows.

Fast mode: C_b = 320 pF, R_b = 1.1 kΩ

(3) I²C fast mode plus

(T_A = –40 to +85°C, 2.7 V ≤ V_{DD} = V_{DD_RF} = AV_{DD_RF} ≤ 3.6 V, V_{SS} = V_{SS_RF} = AV_{SS_RF} = 0 V)

Parameter	Symbol	Conditions		HS (high-speed main) Mode		LS (low-speed main) Mode		LV (low-voltage main) Mode		Unit
				MIN.	MAX.	MIN.	MAX.	MIN.	MAX.	
SCLA0 clock frequency	f_{SCL}	Fast mode plus: f_{CLK} ≥ 10 MHz	2.7 V ≤ V_{DD} ≤ 3.6 V	0	1000	–		–		kHz
Setup time of restart condition	$t_{SU:STA}$	2.7 V ≤ V_{DD} ≤ 3.6 V		0.26		–		–		μs
Hold time[Note 1]	$t_{HD:STA}$	2.7 V ≤ V_{DD} ≤ 3.6 V		0.26		–		–		μs
Hold time when SCLA0 = "L"	t_{LOW}	2.7 V ≤ V_{DD} ≤ 3.6 V		0.5		–		–		μs
Hold time when SCLA0 = "H"	t_{HIGH}	2.7 V ≤ V_{DD} ≤ 3.6 V		0.26		–		–		μs
Data setup time (reception)	$t_{SU:DAT}$	2.7 V ≤ V_{DD} ≤ 3.6 V		50		–		–		μs
Data hold time (transmission)[Note 2]	$t_{HD:DAT}$	2.7 V ≤ V_{DD} ≤ 3.6 V		0	0.45	–		–		μs
Setup time of stop condition	$t_{SU:STO}$	2.7 V ≤ V_{DD} ≤ 3.6 V		0.26		–		–		μs
Bus-free time	t_{BUF}	2.7 V ≤ V_{DD} ≤ 3.6 V		0.5		–		–		μs

Notes 1. The first clock pulse is generated after this period when the start/restart condition is detected.

2. The maximum value (MAX.) of $t_{HD:DAT}$ is during normal transfer and a wait state is inserted in the $\overline{ACK}$ (acknowledge) timing.

Caution The values in the above table are applied even when bit 2 (PIOR2) in the peripheral I/O redirection register (PIOR) is 1. At this time, the pin characteristics (I_{OH1}, I_{OL1}, V_{OH1}, V_{OL1}) must satisfy the values in the redirect destination.

Remark The maximum value of Cb (communication line capacitance) and the value of Rb (communication line pull-up resistor) at that time in each mode are as follows.
Fast mode plus: C_b = 120 pF, R_b = 1.1 kΩ

IICA serial transfer timing

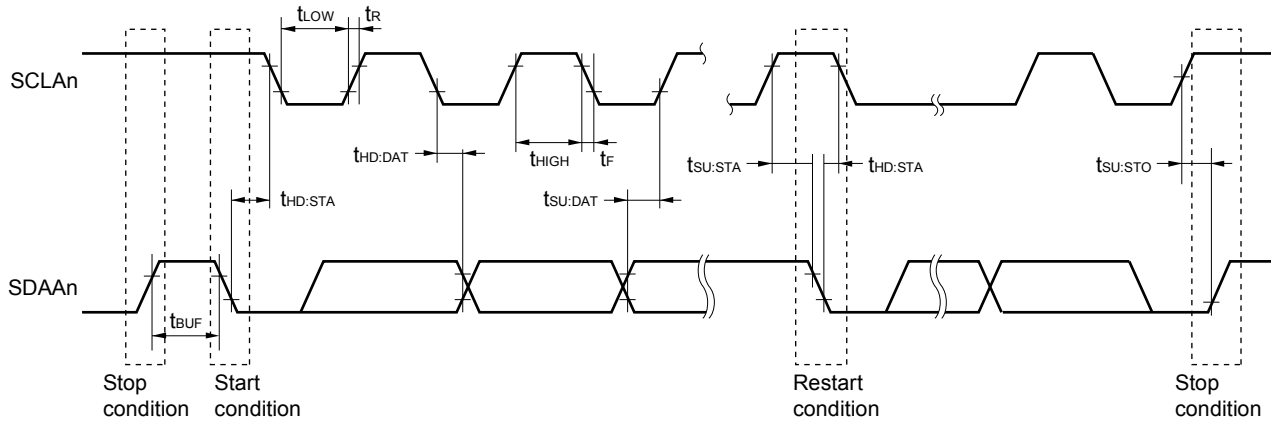

Remark n = 0

30.8 Analog Characteristics

30.8.1 A/D converter characteristics

A/D convertor characteristics category

Reference voltage / Input channel	Ref. voltage(+) = AV_{REFP} Ref. voltage(–) = AV_{REFM}	Ref. voltage(+) = V_{DD} Ref. voltage(–) = V_{SS}	Ref. voltage(+) = V_{BGR} Ref. voltage(–) = AV_{REFM}
ANI0	-	Refer to **30.8.1 (3)**	Refer to **30.8.1 (4)**
ANI1			-
ANI2, ANI3	Refer to **30.8.1 (1)**		Refer to **30.8.1 (4)**
ANI16 to ANI19	Refer to **30.8.1 (2)**		
Internal reference voltage, Temperature sensor output voltage	Refer to **30.8.1 (1)**		-

(1) When reference voltage (+) = AV_{REFP}/ANI0 (ADREFP1 = 0, ADREFP0 = 1), reference voltage (–) = AV_{REFM}/ANI1 (ADREFM = 1), conversion target : ANI2, ANI3, Internal reference voltage, Temperature sensor output voltage

(T_A = –40 to +85°C, 1.6 V ≤ AV_{REFP} ≤ V_{DD} = V_{DD_RF} = AV_{DD_RF} ≤ 3.6 V, V_{SS} = V_{SS_RF} = AV_{SS_RF} = 0 V, Reference voltage (+) = AV_{REFP}, Reference voltage (–) = AV_{REFM} = 0 V)

Parameter	Symbol	Conditions		MIN.	TYP.	MAX.	Unit
Resolution	RES			8		10	bit
Overall error Note 1	AINL	10-bit resolution AV_{REFP} = V_{DD} Note 3	1.8 V ≤ AV_{REFP} ≤ 3.6 V		1.2	±3.5	LSB
			1.6 V ≤ AV_{REFP} ≤ 3.6 V Note 4		1.2	±7.0	LSB
Conversion time	t_{conv}	10-bit resolution	2.7 V ≤ AV_{REFP} ≤ 3.6 V	3.1875		39	μs
			1.8 V ≤ AV_{REFP} ≤ 3.6 V	17		39	μs
			1.6 V ≤ AV_{REFP} ≤ 3.6 V	57		95	μs
Zero-scale error Notes 1, 2	E_{ZS}	10-bit resolution AV_{REFP} = V_{DD} Note 3	1.8 V ≤ AV_{REFP} ≤ 3.6 V			±0.25	%FSR
			1.6 V ≤ AV_{REFP} ≤ 3.6 V Note 4			±0.50	%FSR
Full-scale error Notes 1, 2	E_{FS}	10-bit resolution AV_{REFP} = V_{DD} Note 3	1.8 V ≤ AV_{REFP} ≤ 3.6 V			±0.25	%FSR
			1.6 V ≤ AV_{REFP} ≤ 3.6 V Note 4			±0.50	%FSR
Integral linearity error Note 1	ILE	10-bit resolution AV_{REFP} = V_{DD} Note 3	1.8 V ≤ AV_{REFP} ≤ 3.6 V			±2.5	LSB
			1.6 V ≤ AV_{REFP} ≤ 3.6 V Note 4			±5.0	LSB
Differential linearity error Note 1	DLE	10-bit resolution AV_{REFP} = V_{DD} Note 3	1.8 V ≤ AV_{REFP} ≤ 3.6 V			±1.5	LSB
			1.6 V ≤ AV_{REFP} ≤ 3.6 V Note 4			±2.0	LSB
<R> Analog input voltage	V_{AIN}	ANI2, ANI3		0		AV_{REFP}	V
		Select internal reference voltage 2.4 V ≤ V_{DD} ≤ 3.6 V, HS (high-speed main) mode		V_{BGR} Note 5			V
		Select temperature sensor output voltage 2.4 V ≤ V_{DD} ≤ 3.6 V, HS (high-speed main) mode		V_{TMPS25} Note 5			V

Notes 1. Excludes quantization error (±1/2 LSB).

2. This value is indicated as a ratio (%FSR) to the full-scale value.

3. When AV_{REFP} < V_{DD}, MAX. value is following.

Overall error: ±1 LSB is added to the MAX. value of AV_{REFP} = V_{DD}.

Zero-scale error / Full-scale error: ±0.05 %FSR is added to the MAX. value of AV_{REFP} = V_{DD}.

Integral linearity error / Differential linearity error: ±0.5 LSB is added to the MAX. value of AV_{REFP} = V_{DD}.

4. When the the conversion time is set to 57 μs (min.) and 95 μs (max.).

5. Refer to **30.8.2 Temperature sensor and internal reference voltage characteristics**.

(2) When reference voltage (+) = AV_{REFP}/ANI0 (ADREFP1 = 0, ADREFP0 = 1), reference voltage (–) = AV_{REFM}/ANI1 (ADREFM = 1), conversion target : ANI16 to ANI19

(T_A = –40 to +85°C, 1.6 V ≤ AV_{REFP} ≤ V_{DD} = V_{DD_RF} = AV_{DD_RF} ≤ 3.6 V, V_{SS} = V_{SS_RF} = AV_{SS_RF} = 0 V, Reference voltage (+) = AV_{REFP}, Reference voltage (–) = AV_{REFM} = 0 V)

Parameter	Symbol	Conditions		MIN.	TYP.	MAX.	Unit
Resolution	RES			8		10	bit
Overall error Note 1	AINL	10-bit resolution AV_{REFP} = V_{DD} Note 3	1.8 V ≤ AV_{REFP} ≤ 3.6 V		1.2	±5.0	LSB
			1.6 V ≤ AV_{REFP} ≤ 3.6 V Note 4		1.2	±8.5	LSB
Conversion time	T_{conv}	10-bit resolution	2.7 V ≤ V_{DD} ≤ 3.6 V	3.1875		39	μs
			1.8 V ≤ V_{DD} ≤ 3.6 V	17		39	μs
			1.6 V ≤ AV_{REFP} ≤ 3.6 V	57		95	μs
Zero-scale error Notes 1, 2	E_{ZS}	10-bit resolution AV_{REFP} = V_{DD} Note 3	1.8 V ≤ AV_{REFP} ≤ 3.6 V			±0.35	%FSR
			1.6 V ≤ AV_{REFP} ≤ 3.6 V Note 4			±0.60	%FSR
Full-scale error Notes 1, 2	E_{FS}	10-bit resolution AV_{REFP} = V_{DD} Note 3	1.8 V ≤ AV_{REFP} ≤ 3.6 V			±0.35	%FSR
			1.6 V ≤ AV_{REFP} ≤ 3.6 V Note 4			±0.60	%FSR
Integral linearity error Note 1	ILE	10-bit resolution AV_{REFP} = V_{DD} Note 3	1.8 V ≤ AV_{REFP} ≤ 3.6 V			±3.5	LSB
			1.6 V ≤ AV_{REFP} ≤ 3.6 V Note 4			±6.0	LSB
Differential linearity error Note 1	DLE	10-bit resolution AV_{REFP} = V_{DD} Note 3	1.8 V ≤ AV_{REFP} ≤ 3.6 V			±2.0	LSB
			1.6 V ≤ AV_{REFP} ≤ 3.6 V Note 4			±2.5	LSB
Analog input voltage	V_{AIN}			0		AV_{REFP} and V_{DD}	V

Notes 1. Excludes quantization error (±1/2 LSB).

2. This value is indicated as a ratio (%FSR) to the full-scale value.

3. When AV_{REFP} < V_{DD}, MAX. value is following.

Overall error: ±4 LSB is added to the MAX. value of AV_{REFP} = V_{DD}.

Zero-scale error / Full-scale error: ±0.2 %FSR is added to the MAX. value of AV_{REFP} = V_{DD}.

Integral linearity error / Differential linearity error: ±2 LSB is added to the MAX. value n of AV_{REFP} = V_{DD}.

4. When the the conversion time is set to 57 μs (min.) and 95 μs (max.).

(3) When reference voltage (+) = V_{DD} (ADREFP1 = 0, ADREFP0 = 0), reference voltage (–) = V_{SS} (ADREFM = 0), conversion target : ANI0 to ANI3, ANI16 to ANI19, Internal reference voltage, Temperature sensor output voltage

(T_A = –40 to +85°C, 1.8 V ≤ V_{DD} = V_{DD_RF} = AV_{DD_RF} ≤ 3.6 V, V_{SS} = V_{SS_RF} = AV_{SS_RF} = 0 V, Reference voltage (+) = V_{DD}, Reference voltage (–) = V_{SS})

Parameter	Symbol	Conditions		MIN.	TYP.	MAX.	Unit
Resolution	RES			8		10	bit
Overall error[Note 1]	AINL	10-bit resolution	1.8 V ≤ V_{DD} ≤ 3.6 V		1.2	±7.0	LSB
			1.6 V ≤ V_{DD} ≤ 3.6 V [Note 3]		1.2	±10.5	LSB
Conversion time	T_{conv}	10-bit resolution conversion target : ANI0 to ANI3, ANI16 to ANI19	2.7 V ≤ V_{DD} ≤ 3.6 V	3.1875		39	μs
			1.8 V ≤ V_{DD} ≤ 3.6 V	17		39	μs
			1.6 V ≤ V_{DD} ≤ 3.6 V	57		95	μs
		10-bit resolution conversion target : Internal reference voltage, Temperature sensor output voltage (HS (high-speed main) Mode)	2.7 V ≤ V_{DD} ≤ 3.6 V	3.5635		39	μs
			2.7 V ≤ V_{DD} ≤ 3.6 V	17		39	μs
Zero-scale error[Notes 1, 2]	E_{ZS}	10-bit resolution	1.8 V ≤ V_{DD} ≤ 3.6 V			±0.60	%FSR
			1.6 V ≤ V_{DD} ≤ 3.6 V [Note 3]			±0.85	%FSR
Full-scale error[Notes 1, 2]	E_{FS}	10-bit resolution	1.8 V ≤ V_{DD} ≤ 3.6 V			±0.60	%FSR
			1.6 V ≤ V_{DD} ≤ 3.6 V [Note 3]			±0.85	%FSR
Integral linearity error[Note 1]	ILE	10-bit resolution	1.8 V ≤ V_{DD} ≤ 3.6 V			±4.0	LSB
			1.6 V ≤ V_{DD} ≤ 3.6 V [Note 3]			±6.5	LSB
Differential linearity error[Note 1]	DLE	10-bit resolution	1.8 V ≤ V_{DD} ≤ 3.6 V			±2.0	LSB
			1.6 V ≤ V_{DD} ≤ 3.6 V [Note 3]			±2.5	LSB
<R> Analog input voltage	V_{AIN}	ANI0 to ANI3, ANI16 to ANI19		0		V_{DD}	V
		Select internal reference voltage 2.4 V ≤ V_{DD} ≤ 3.6 V, HS (high-speed main) mode		V_{BGR} [Note 4]			V
		Select temperature sensor output voltage 2.4 V ≤ V_{DD} ≤ 3.6 V, HS (high-speed main) mode		V_{TMPS25} [Note 4]			V

Notes 1. Excludes quantization error (±1/2 LSB).

2. This value is indicated as a ratio (%FSR) to the full-scale value.

3. When the the conversion time is set to 57 μs (min.) and 95 μs (max.).

4. Refer to **30.8.2 Temperature sensor and internal reference voltage characteristics**

(4) When reference voltage (+) = Internal reference voltage (ADREFP1 = 1, ADREFP0 = 0), reference voltage (–) = AV_{REFM}/ANI1 (ADREFM = 1), conversion target : ANI0 to ANI3, ANI16 to ANI19

(T_A = –40 to +85°C, 2.4 V ≤ V_{DD} = V_{DD_RF} = AV_{DD_RF} ≤ 3.6 V, V_{SS} = V_{SS_RF} = AV_{SS_RF} = 0 V, Reference voltage (+) = V_{BGR} Note 3, Reference voltage (–) = AV_{REFM} Note 4 = 0 V, HS (high-speed main) mode)

Parameter	Symbol	Conditions		MIN.	TYP.	MAX.	Unit
Resolution	RES				8		bit
Conversion time	T_{cony}	8-bit resolution	2.4 V ≤ V_{DD} ≤ 3.6 V	17		39	μs
Zero-scale error Notes 1, 2	E_{ZS}	8-bit resolution	2.4 V ≤ V_{DD} ≤ 3.6 V			±0.60	%FSR
Integral linearity error Note 1	ILE	8-bit resolution	2.4 V ≤ V_{DD} ≤ 3.6 V			±2.0	LSB
Differential linearity error Note 1	DLE	8-bit resolution	2.4 V ≤ V_{DD} ≤ 3.6 V			±1.0	LSB
Analog input voltage	V_{AIN}			0		V_{BGR} Note 3	V

Notes 1. Excludes quantization error (±1/2 LSB).

2. This value is indicated as a ratio (%FSR) to the full-scale value.

3. Refer to **30.8.2 Temperature sensor and internal reference voltage characteristics.**

4. When reference voltage (-) = V_{SS}, MAX. value is following.

Zero-scale error: ±0.35 %FSR is added to the MAX. value of reference voltage (–) = AV_{REFM}.

Integral linearity error: ±0.5 LSB is added to the MAX. value of reference voltage (–) = AV_{REFM}.

Differential linearity error: ±0.2 LSB is added to the MAX. value of reference voltage (–) = AV_{REFM}.

30.8.2 Temperature sensor and internal reference voltage characteristics

(T_A = –40 to +85°C, 2.4 V ≤ V_{DD} = V_{DD_RF} = AV_{DD_RF} ≤ 3.6 V, V_{SS} = V_{SS_RF} = AV_{SS_RF} = 0 V, HS (high-speed main) mode)

Parameter	Symbol	Conditions	MIN.	TYP.	MAX.	Unit
Temperature sensor output voltage	V_{TMPS25}	Setting ADS register = 80H, T_A = +25°C		1.05		V
Internal reference voltage	V_{BGR}	Setting ADS register = 81H	1.38	1.45	1.5	V
Temperature coefficient	F_{VTMPS}	Temperature sensor output voltage that depends on the temperature		–3.6		mV/°C
Operation stabilization wait time	t_{AMP}		5			μs

30.8.3 POR circuit characteristics

(T_A = –40 to +85°C, V_{SS} = V_{SS_RF} = AV_{SS_RF} = 0 V)

Parameter	Symbol	Conditions	MIN.	TYP.	MAX.	Unit
Detection voltage	V_{POR}	Rise time	1.47	1.51	1.55	V
	V_{PDR}	Fall time	1.46	1.50	1.54	V
Minimum pulse width[Note]	T_{PW}	Other than STOP/SUB_RUN/SUB_HALT	300			μs

Note This is the time required for the POR circuit to execute a reset operation when V_{DD} falls below V_{PDR}. When the main system clock (f_{MAIN}) has been stopped by setting bit 0 (HIOSTOP) and bit 7 (MSTOP) of the clock operation status control register (CSC) or when the microcontroller enters STOP mode, this is the time required for the POR circuit to execute a reset operation between when V_{DD} falls below 0.7 V and when V_{DD} rises to V_{POR} or higher.

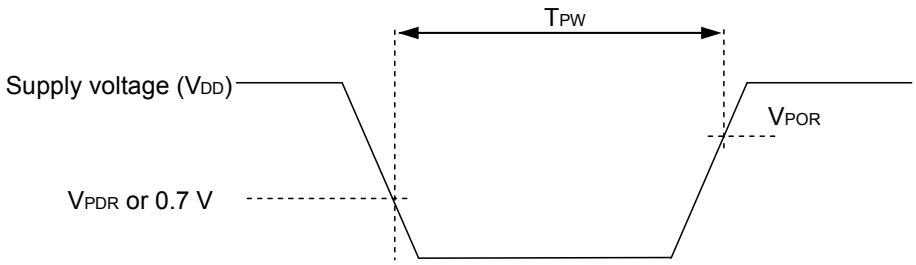

30.8.4 LVD circuit characteristics

LVD Detection Voltage of Reset Mode and Interrupt Mode
(T_A = –40 to +85°C, $V_{PDR} \le V_{DD} = V_{DD\_RF} = AV_{DD\_RF} \le 3.6$ V, $V_{SS} = V_{SS\_RF} = AV_{SS\_RF} = 0$ V)

Parameter		Symbol	Conditions	MIN.	TYP.	MAX.	Unit
Detection voltage	Supply voltage	V_{LVI2}	Power supply rise time	3.07	3.13	3.19	V
			Power supply fall time	3	3.06	3.12	V
		V_{LVI3}	Power supply rise time	2.96	3.02	3.08	V
			Power supply fall time	2.9	2.96	3.02	V
		V_{LVI4}	Power supply rise time	2.86	2.92	2.97	V
			Power supply fall time	2.8	2.86	2.91	V
		V_{LVI5}	Power supply rise time	2.76	2.81	2.87	V
			Power supply fall time	2.7	2.75	2.81	V
		V_{LVI6}	Power supply rise time	2.66	2.71	2.76	V
			Power supply fall time	2.6	2.65	2.7	V
		V_{LVI7}	Power supply rise time	2.56	2.61	2.66	V
			Power supply fall time	2.5	2.55	2.6	V
		V_{LVI8}	Power supply rise time	2.45	2.5	2.55	V
			Power supply fall time	2.4	2.45	2.5	V
		V_{LVI9}	Power supply rise time	2.05	2.09	2.13	V
			Power supply fall time	2	2.04	2.08	V
		V_{LVI10}	Power supply rise time	1.94	1.98	2.02	V
			Power supply fall time	1.9	1.94	1.98	V
		V_{LVI11}	Power supply rise time	1.84	1.88	1.91	V
			Power supply fall time	1.8	1.84	1.87	V
		V_{LVI12}	Power supply rise time	1.74	1.77	1.81	V
			Power supply fall time	1.7	1.73	1.77	V
		V_{LVI13}	Power supply rise time	1.64	1.67	1.7	V
			Power supply fall time	1.6	1.63	1.66	V
Minimum pulse width		T_{LW}		300			μs
Detection delay time						300	μs

LVD Detection Voltage of Interrupt & Reset Mode
(T_A = –40 to +85°C, 1.6 V ≤ V_{DD} = V_{DD_RF} = AV_{DD_RF} ≤ 3.6 V, V_{SS} = V_{SS_RF} = AV_{SS_RF} = 0 V)

Parameter	Symbol	Conditions			MIN.	TYP.	MAX.	Unit
Interrupt and reset mode	V_{LVDA0}	V_{POC2}, V_{POC1}, V_{POC0} = 0, 0, 0, falling reset voltage			1.60	1.63	1.66	V
	V_{LVDA1}		LVIS1, LVIS0 = 1, 0	Rising release reset voltage	1.74	1.77	1.81	V
				Falling interrupt voltage	1.70	1.73	1.77	V
	V_{LVDA2}		LVIS1, LVIS0 = 0, 1	Rising release reset voltage	1.84	1.88	1.91	V
				Falling interrupt voltage	1.8	1.84	1.87	V
	V_{LVDA3}		LVIS1, LVIS0 = 0, 0	Rising release reset voltage	2.86	2.92	2.97	V
				Falling interrupt voltage	2.80	2.86	2.91	V
	V_{LVDB0}	V_{POC2}, V_{POC1}, V_{POC0} = 0, 0, 1, falling reset voltage			1.80	1.84	1.87	V
	V_{LVDB1}		LVIS1, LVIS0 = 1, 0	Rising release reset voltage	1.94	1.98	2.02	V
				Falling interrupt voltage	1.90	1.94	1.98	V
	V_{LVDB2}		LVIS1, LVIS0 = 0, 1	Rising release reset voltage	2.05	2.09	2.13	V
				Falling interrupt voltage	2.00	2.04	2.08	V
	V_{LVDB3}		LVIS1, LVIS0 = 0, 0	Rising release reset voltage	3.07	3.13	3.19	V
				Falling interrupt voltage	3.00	3.06	3.12	V
	V_{LVDC0}	V_{POC2}, V_{POC1}, V_{POC0} = 0, 1, 0, falling reset voltage			2.40	2.45	2.50	V
	V_{LVDC1}		LVIS1, LVIS0 = 1, 0	Rising release reset voltage	2.56	2.61	2.66	V
				Falling interrupt voltage	2.50	2.55	2.60	V
	V_{LVDC2}		LVIS1, LVIS0 = 0, 1	Rising release reset voltage	2.66	2.71	2.76	V
				Falling interrupt voltage	2.60	2.65	2.70	V
	V_{LVDD0}	V_{POC2}, V_{POC1}, V_{POC0} = 0, 1, 1, falling reset voltage			2.70	2.75	2.81	V
	V_{LVDD1}		LVIS1, LVIS0 = 1, 0	Rising release reset voltage	2.86	2.92	2.97	V
				Falling interrupt voltage	2.80	2.86	2.91	V
	V_{LVDD2}		LVIS1, LVIS0 = 0, 1	Rising release reset voltage	2.96	3.02	3.08	V
				Falling interrupt voltage	2.90	2.96	3.02	V

30.8.5 Supply voltage rise time

(T_A = –40 to +85°C, V_{SS} = V_{SS_RF} = AV_{SS_RF} = 0 V)

Parameter	Symbol	Conditions	MIN.	TYP.	MAX.	Unit
V_{DD} rise slope	S_{VDD}				54	V/ms

Caution Make sure to keep the internal reset state by the LVD circuit or an external reset until V_{DD} reaches the operating voltage range shown in 30.6 AC Characteristics.

30.9 RF Transceiver Characteristics

30.9.1 RF transmission characteristics

Unless specified otherwise, the measurement is performed by our evaluation board.

(T_A = +25°C, V_{DD} = V_{DD_RF} = AV_{DD_RF} = 3.0 V, f = 2440 MHz, V_{SS} = V_{SS_RF} = AV_{SS_RF} = 0 V)

Parameter	Symbol	Conditions		MIN.	TYP.	MAX.	Unit
RF frequency range	RF_{CF}			2402		2480	MHz
Data rate	RF_{DATA}				1		Mbps
Maximum transmitted output power	RF_{POWER}	RF output pin	RF low power mode	-18	-15	-12	dBm
			RF normal mode	-3	0	3	dBm
			RF high performance mode	-3	0	3	dBm
Transmitted output power setting	RF_{TXPOW}	0, -1, -2, -7, -10, -15 dBm		-15		0	dBm
Spurious radiation	RF_{TXSP}	30 to 88 MHz			-76	-55	dBm
		88 to 216 MHz			-76	-52	dBm
		216 to 960 MHz			-74	-49	dBm
		960 to 1000 MHz			-74	-30	dBm
		1 to 12.75 GHz			-42	-41	dBm
		1.8 to 1.9 GHz			-73	-47	dBm
		5.15 to 5.3 GHz			-71	-47	dBm
Harmonics	RF_{TXHC1}	2nd Harmonics			-52	-41	dBm
	RF_{TXHC2}	3rd Harmonics			-51	-41	dBm
Frequency tolerance	RF_{TXFERR}			-30		+30	ppm
Impedance	RF_{Z1}				50+j0		Ω

Caution Install EMI countermeasures as required to prevent EMI effects of the RF transmission characteristics.

30.9.2 RF reception characteristics

Unless specified otherwise, the measurement is performed by our evaluation board.

(T_A = +25°C, V_{DD} = V_{DD_RF} = AV_{DD_RF} = 3.0 V, f = 2440 MHz, V_{SS} = V_{SS_RF} = AV_{SS_RF} = 0 V)

Parameter	Symbol	Conditions		MIN.	TYP.	MAX.	Unit
RF input frequency	RF_{RXFRIN}			2402		2480	MHz
Maximum input level	RF_{LEVL}	PER ≤ 30.8% RF input pin	RF low power mode	-10	0	-	dBm
			RF normal mode	-10	1	-	dBm
			RF high performance mode	-10	1	-	dBm
Receiver sensitivity	RF_{STY}	PER ≤ 30.8%	RF low power mode	-	-60	-50	dBm
			RF normal mode	-	-90	-70	dBm
			RF high performance mode	-	-92	-70	dBm
Secondary radiation	RF_{RXSP}		30 MHz to 1 GHz	-	-72	-57	dBm/ 100 kHz
			1 GHz to 12 GHz	-	-57	-54	dBm/ 100 kHz
Common channel rejection ratio	RF_{CCR}	PER ≤ 30.8%, Prf = –67dBm		-21	-12	-	dB
Adjacent channel rejection ratio	RF_{ADCR}	PER ≤ 30.8% Prf = –67 dBm	±1 MHz	-15	-5	-	dB
			±2 MHz	17	29	-	dB
			±3 MHz	27	34	-	dB
Blocking	RF_{BLK}	PER ≤ 30.8% Prf = –67 dBm	30 MHz - 2000 MHz	-30	-13	-	dB
			2000 MHz to 2399 MHz	-35	-30	-	dBm
			2484 MHz to 3000 MHz	-35	-30	-	dBm
			> 3000 MHz	-30	-17	-	dBm
Frequency tolerance	RF_{RXFERR}	PER ≤ 30.8%		-250		+250	kHz
RSSI accuracy	RF_{RSSIS}	T_A = +25°C, –70 dBm ≤ Prf ≤ –10 dBm		-4	0	4	dB

30.9.3 Performance mapping for typical RF (Reference)

(1) Peak Current during RF Transmission

Unless specified otherwise, the measurement is performed by our evaluation board.
Current consumption is not including MCU unit.

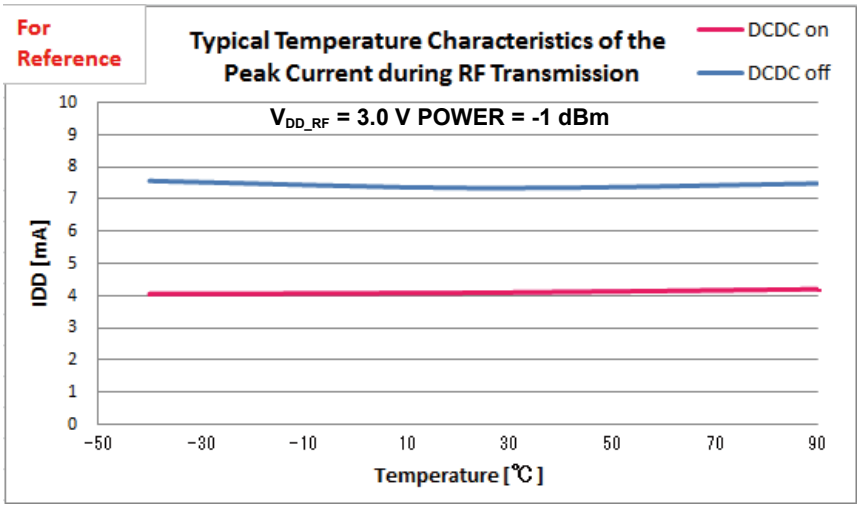

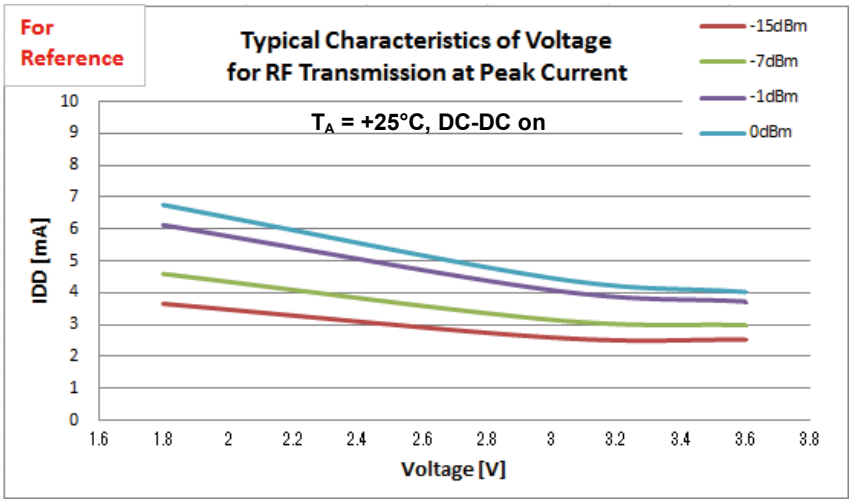

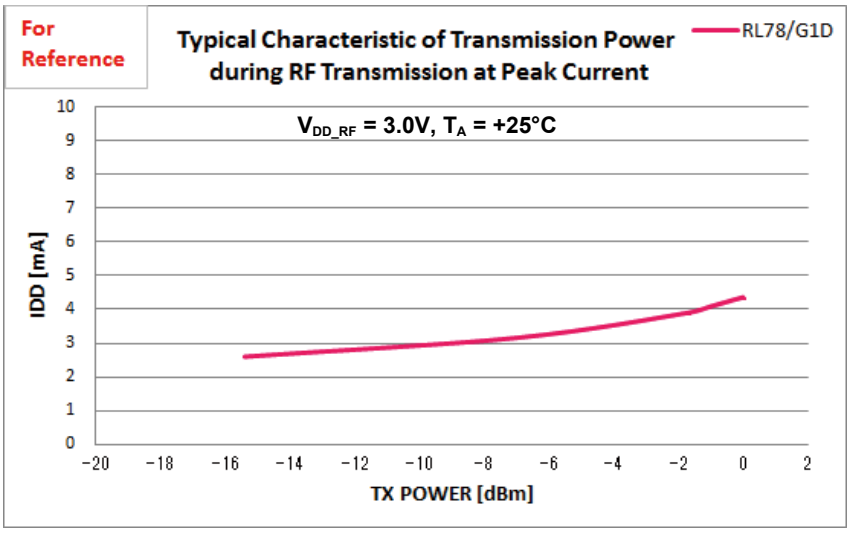

(2) Peak Current during RF Reception

Unless specified otherwise, the measurement is performed by our evaluation board.

Current consumption is not including MCU unit.

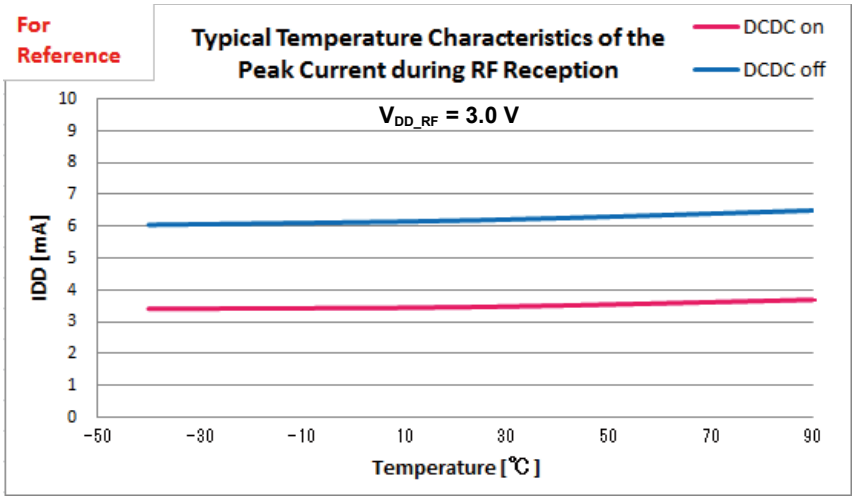

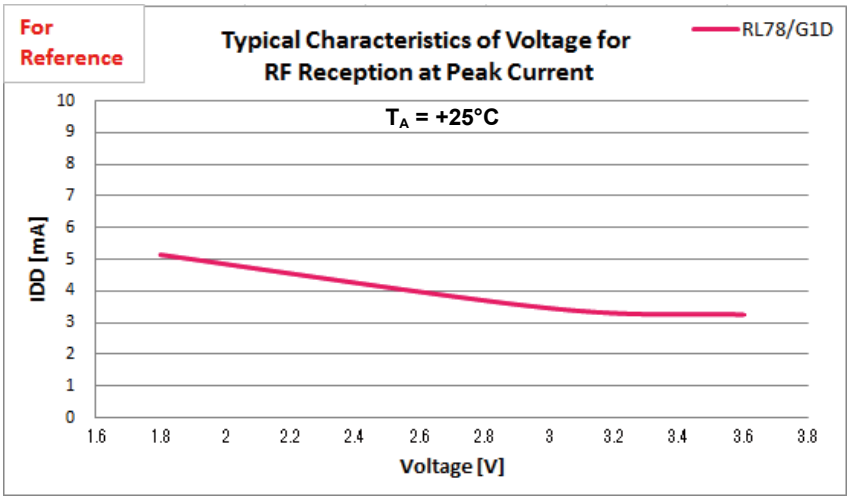

(3) RF Output Power during Transmission

Unless specified otherwise, the measurement is performed by our evaluation board.

Current consumption is not including MCU unit.

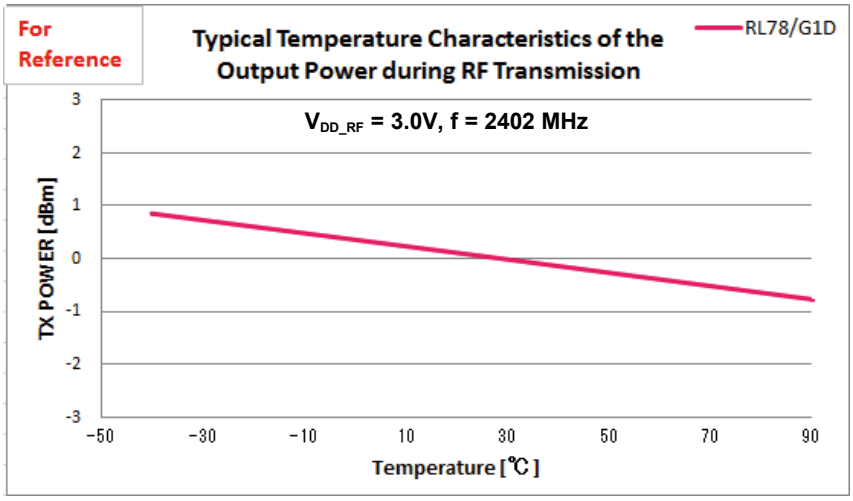

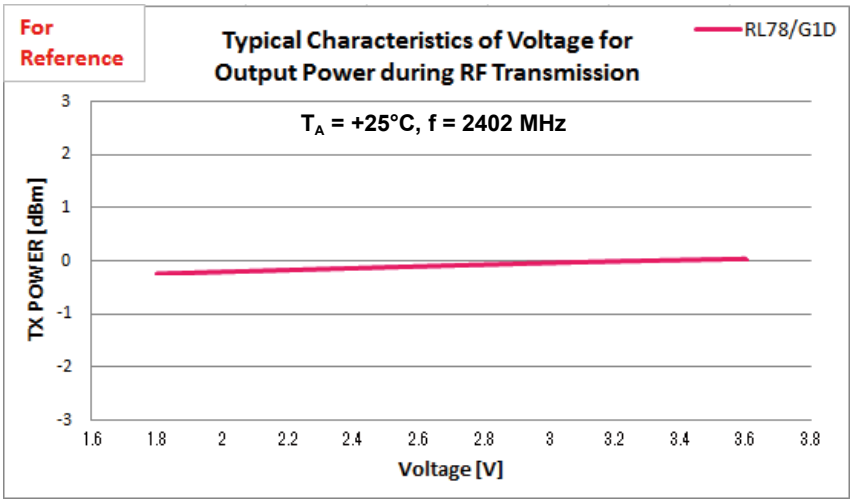
For Reference
Typical Characteristics of Voltage for Output Power during RF Transmission
RL78/G1D
T_A = +25°C, f = 2402 MHz
TX POWER [dBm]
3
2
1
0
-1
-2
-3
1.6
1.8
2
2.2
2.4
2.6
2.8
3
3.2
3.4
3.6
3.8
Voltage [V]

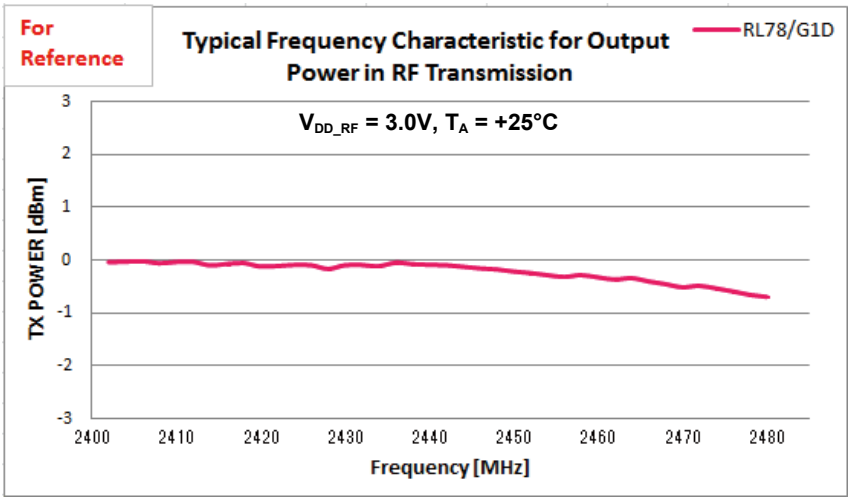
For Reference
Typical Frequency Characteristic for Output Power in RF Transmission
RL78/G1D
V_{DD_RF} = 3.0V, T_A = +25°C
TX POWER [dBm]
3
2
1
0
-1
-2
-3
2400
2410
2420
2430
2440
2450
2460
2470
2480
Frequency [MHz]

(4) RF Reception Sensitivity

Unless specified otherwise, the measurement is performed by our evaluation board.

Current consumption is not including MCU unit.

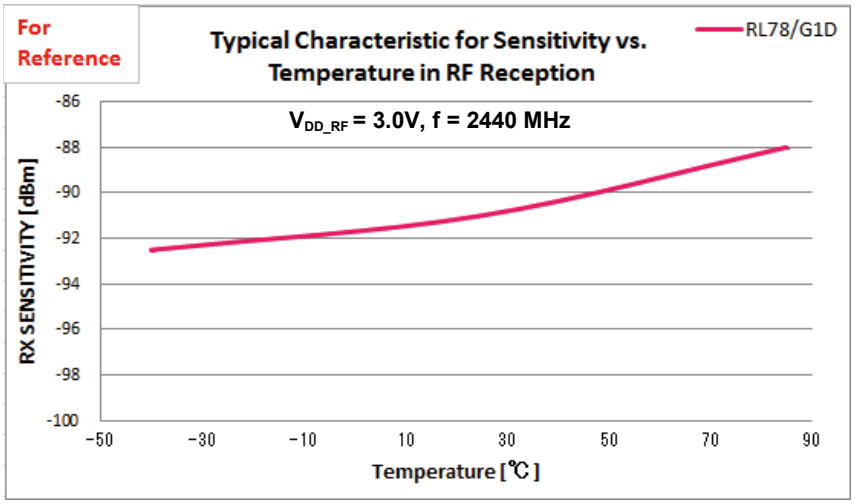

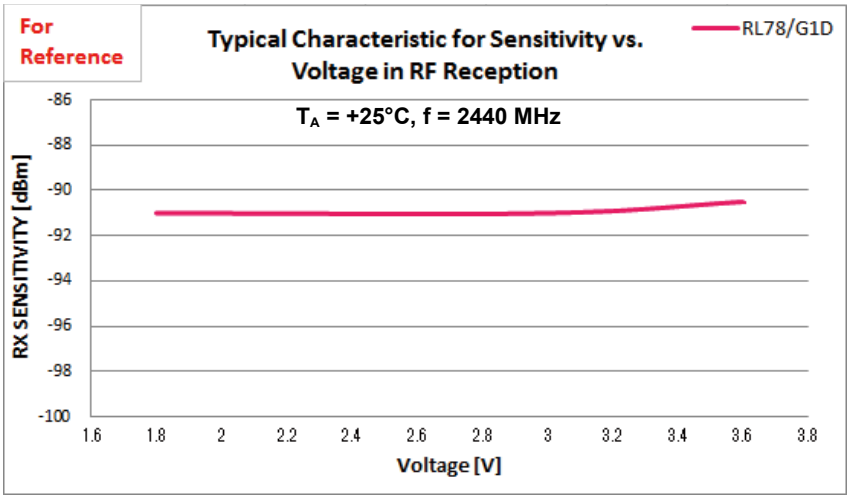

30.10 RAM Data Retention Characteristics

(T_A = -40 to +85°C)

Parameter	Symbol	Conditions	MIN.	TYP.	MAX.	Unit
Data retention supply voltage	V_{DDDR}		1.46 Note		3.6	V

Note The value depends on the POR detection voltage. When the voltage drops, the data is retained before a POR reset is effected, but data is not retained when a POR reset is effected.

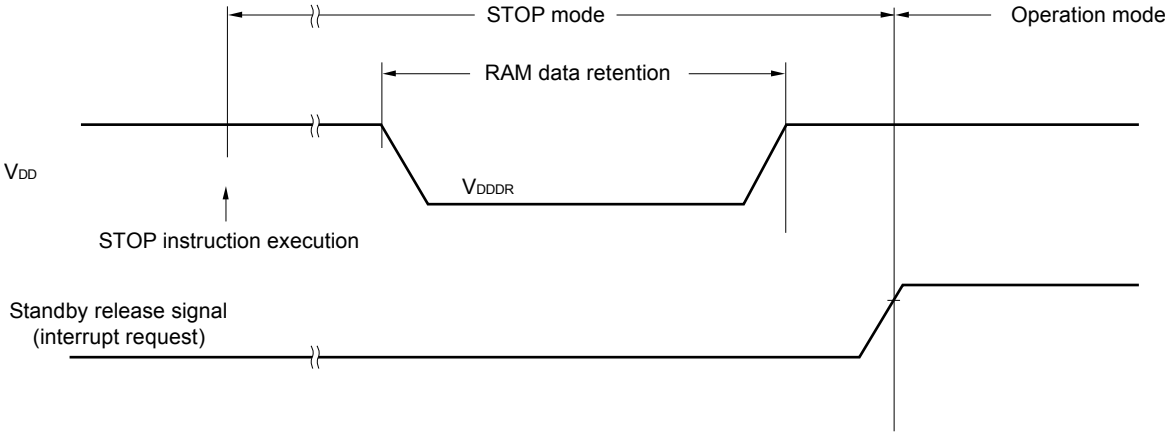

30.11 Flash Memory Programming Characteristics

(T_A = –40 to +85°C, 1.8 V ≤ V_{DD} = V_{DD_RF} = AV_{DD_RF} ≤ 3.6 V, V_{SS} = V_{SS_RF} = AV_{SS_RF} = 0 V)

Parameter	Symbol	Conditions	MIN.	TYP.	MAX.	Unit
CPU/peripheral hardware clock frequency	f_{CLK}	1.8 V ≤ V_{DD} ≤ 3.6 V	1		32	MHz
Number of code flash rewrites Notes 1, 2, 3	C_{erwr}	Retained for 20 years, T_A = 85°C	1,000			Times
Number of data flash rewrites Notes 1, 2, 3		Retained for 1 year, T_A = 25°C		1,000,000		Times
		Retained for 5 years, T_A = 85°C	100,000			Times
		Retained for 20 years, T_A = 85°C	10,000			Times

Notes 1. 1 erase + 1 write after the erase is regarded as 1 rewrite. The retaining years are until next rewrite after the rewrite.

2. When using flash memory programmer and Renesas Electronics self programming library

3. This shows the flash memory characteristics. This is a result obtained from Renesas Electronics reliability test.

30.12 Special Flash Memory Programming Communication (UART)

(T_A = –40 to +85°C, 1.8 V ≤ V_{DD} = V_{DD_RF} = AV_{DD_RF} ≤ 3.6 V, V_{SS} = V_{SS_RF} = AV_{SS_RF} = 0 V)

Parameter	Symbol	Conditions	MIN.	TYP.	MAX.	Unit
Transfer rate		When programming of flash memory	115,200		1,000,000	bps

30.13 Timing of Entry to Flash Memory Programming Modes

(T_A = –40 to +85°C, 1.8 V ≤ V_{DD} = V_{DD_RF} = AV_{DD_RF} ≤ 3.6 V, V_{SS} = V_{SS_RF} = AV_{SS_RF} = 0 V)

Parameter	Symbol	Conditions	MIN.	MAX.	Unit
Time to complete the communication for the initial setting after the external reset is released	t_{SUINIT}	POR and LVD reset must be released before the external reset is released.		100	ms
Time to release the external reset after the TOOL0 pin is set to the low level	t_{SU}	POR and LVD reset must be released before the external reset is released.	10		μs
Time to hold the TOOL0 pin at the low level after the external reset is released (excluding the processing time of the firmware to control the flash memory)	t_{HD}	POR and LVD reset must be released before the external reset is released.	1		ms

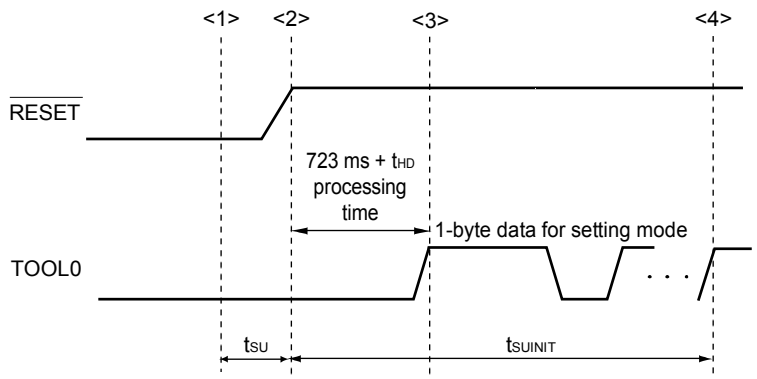

<1> The low level is input to the TOOL0 pin.

<2> The external reset is released (POR and LVD reset must be released before the external reset is released.).

<3> The TOOL0 pin is set to the high level.

<4> Setting of the flash memory programming mode by UART reception and complete the baud rate setting.

Remark t_{SUINIT}: Communication for the initial setting must be completed within 100 ms after the external reset is released during this period.

t_{SU}: Time to release the external reset after the TOOL0 pin is set to the low level

t_{HD}: Time to hold the TOOL0 pin at the low level after the external reset is released (excluding the processing time of the firmware to control the flash memory)

CHAPTER 31 PACKAGE DRAWINGS

31.1 48-pin plastic WQFN (6 × 6)

JEITA Package Code	RENESAS Code	Previous Code	MASS (Typ) [g]
P-HWQFN48-6x6-0.40	PWQN0048LB-A	-	0.07

Unit: mm

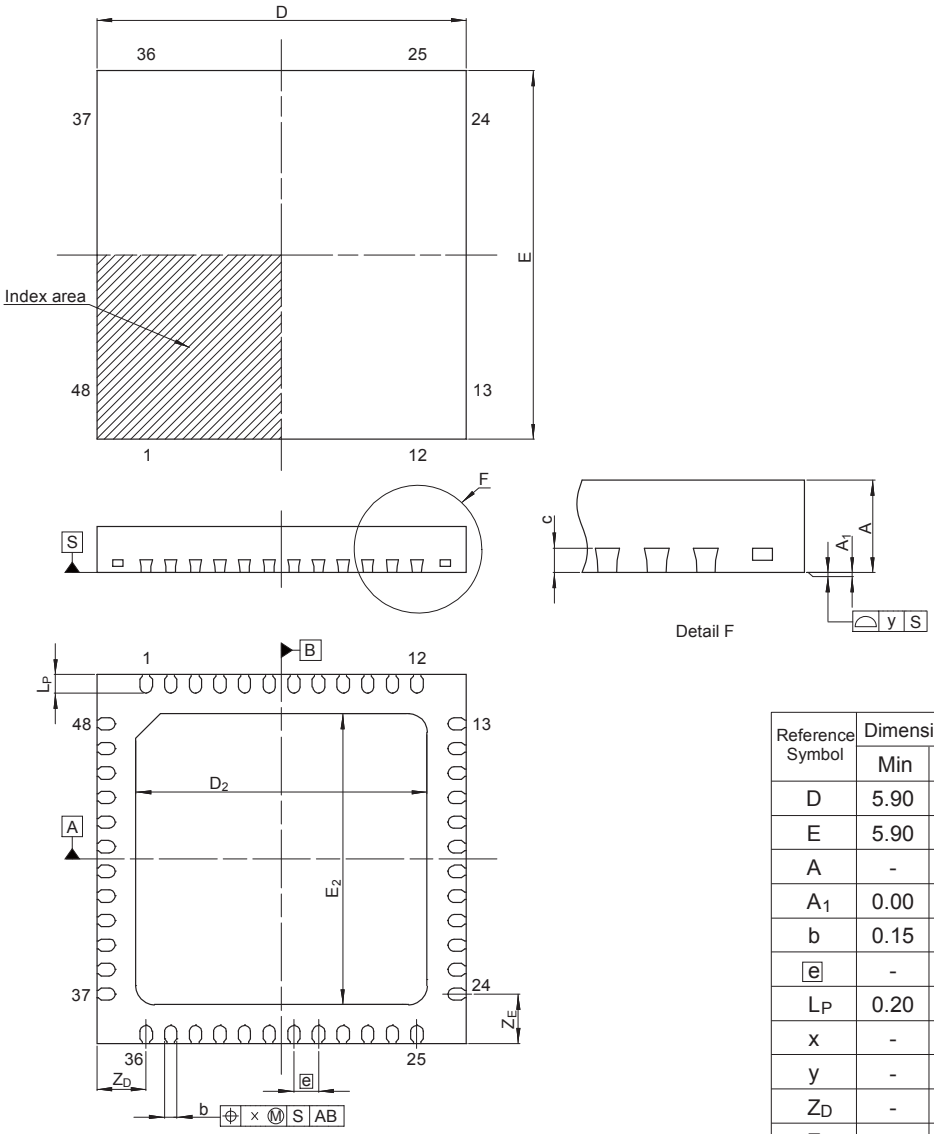

Reference Symbol	Dimensions in millimeters		
	Min	Nom	Max
D	5.90	6.00	6.10
E	5.90	6.00	6.10
A	-	-	0.80
A_1	0.00	-	-
b	0.15	0.20	0.25
e	-	0.40	-
L_P	0.20	0.30	0.40
x	-	-	0.05
y	-	-	0.05
Z_D	-	0.80	-
Z_E	-	0.80	-
c	-	0.20	-
D_2	-	4.73	-
E_2	-	4.73	-

© 2015 Renesas Electronics Corporation. All rights reserved.

APPENDIX A REVISION HISTORY

A.1 Major Revisions in This Edition

(1/1)

Page	Description	Classification
CHAPTER 1 OUTLINE		
p.5	Change of pin name in 1.3 Pin Configuration (Top View)	(a)
CHAPTER 2 CONNECTION BETWEEN MCU AND RF TRANSCEIVER		
p.15	Change of Figure 2-3 Power Configuration	(c)
p.15	Addition of caution 2 in 2.5 Power Configuration	(c)
CHAPTER 3 PIN FUNCTIONS		
p.16	Change of pin names in Table 3-1 Pin I/O Buffer Power Supplies	(a)
p.18	Change of pin name in table (2/2) in 3.1 Pin Functions	(a)
p.22, 23	Change of pin name and recommended connection of unused pins in Table 3-3 Connection of Unused Pins	(c)
p.29	Addition of Figure 3-8 Pin Block Diagram for Pin Type 7-3-1	(c)
CHAPTER 6 CLOCK GENERATOR		
p.135	Modification of description in 6.4.4 Low-speed on-chip oscillator	(c)
CHAPTER 11 WATCHDOG TIMER		
p.310	Addition of note in Table 11-4 Setting Window Open Period of Watchdog Timer	(b)
CHAPTER 23 SAFETY FUNCTIONS		
p.738	Change of Figure 23-3 Flowchart of Flash Memory CRC Operation Function (High-speed CRC)	(b)
CHAPTER 25 OPTION BYTE		
p.757	Addition of note3 in Figure 25-1 Format of User Option Byte (000C0H/010C0H)	(b)
CHAPTER 30 ELECTRICAL SPECIFICATIONS		
p.862	Change of pin names in 30.8 Analog Characteristics (1)	(a)
p.864	Change of pin name in 30.8 Analog Characteristics (3)	(a)

Remark "Classification" in the above table classifies revisions as follows.
(a): Error correction, (b): Addition/change of specifications, (c): Addition/change of description or note, (d): Addition/change of package, part number, or management division, (e): Addition/change of related documents

A.2 Revision History of Preceding Editions

Here is the revision history of the preceding editions. Chapter indicates the chapter of each edition.

(1/7)

Edition	Description	Chapter
Rev.1.10	Change of description in 1.1 Features	CHAPTER 1 OUTLINE
	Change of 1.6 Outline of Functions	
	Change of description in 2.1 Connection Pins of MCU and RF Transceiver	CHAPTER 2 CONNECTION BETWEEN MCU AND RF TRANSCEIVER
	Change of Table 2-1. Internal Pin Connection	
	Change of Table 2-2. Pins Externally Connected on User Board	
	Change of description in Operation Clock of Bluetooth Low Energy	
	Change of Figure 2-3.(b) When DC-DC converter is not used	
	Change of description in 3.1 Pin Functions	CHAPTER 3 PIN FUNCTIONS
	Change of description in 3.2 Functions Other than Port Pins	
	Change of Table 3-3. Connection of Unused Pins	
	Change of Table 5-1. Port Configuration	CHAPTER 5 PORT FUNCTIONS
	Change of description in 5.2.8 Port 12	
	Change of description in 5.2.10 Port 14	
	Change of Table 5-3. PMxx, Pxx, PUxx, PIMxx, POMxx, PMCxx registers and the bits	
	Addition of note 4 to Figure 5-2. Format of Port Register	
	Change of Figure 5-6. Format of Port Mode Control Register	
	Change of caution 1 of Figure 5-7. Format of A/D Port Configuration Register (ADPC)	
	Change of Figure 5-8. Format of Peripheral I/O Redirection Register (PIOR)	
	Change of 5.4.5 (3) Setting procedure when using I/O pins of IIC00 and IIC20 functions with a different potential (1.8 V, 2.5 V, 3 V)	
	Change of remark of Figure 5-10. Basic Configuration of Output Circuit for Pins	
	Change of Table 5-5. Setting Examples of Registers and Output Latches When Using Alternate Function	
	Addition of description in 6.1(1) <2> High-speed on-chip oscillator	CHAPTER 6 CLOCK GENERATOR
	Change of description in 6.1 (4) RF transceiver reference clock	
	Addition of description to caution 6 in Figure 6-4. Format of Clock Operation Status Control Register (CSC)	
	Change of description in 6.4.5 RF reference clock oscillator	
	Addition of caution to 6.6.2 Example of setting X1 oscillation clock	
	Addition of table to 6.6.2 Example of setting X1 oscillation clock	
	Change of description in 6.6.3 Example of setting XT1 oscillation clock	
	Change of Table 6-4. Changing CPU Clock	
	Addition of description in 6.6.7 Conditions before clock oscillation is stopped	
	Addition of caution 3 in 6.7 Resonator and Oscillator Constants, and Change of Figure 6-17(c) RF reference clock oscillation	
	Addition of note 4 to 6.1(1) X1 oscillation	
	Deletion of note 2 in 6.1(1) X1 oscillation	
	Addition of 6.1(3) RF reference clock oscillation: Crystal resonator	

(2/7)

Edition	Description	Chapter
Rev.1.10	Deletion of remark 2 in (7) Delay counter	CHAPTER 7 TIMER ARRAY UNIT
	Deletion of remark 2 in Table 7-2. Timer I/O Pins provided in Each Product	
	Change of notes of Figure 7-2. Internal Block Diagram of Channels 0, 2, 4, 6 of Timer Array Unit 0	
	Addition of remark to Figure 7-3. Internal Block Diagram of Channel 1 and 3 of Timer Array Unit 0	
	Change of Figure 7-4. Internal Block Diagram of Channel 5 of Timer Array Unit 0, and Figure 7-5. Internal Block Diagram of Channel 7 of Timer Array Unit 0	
	Change of remark 2 of Figure 7-10. Format of Timer Clock Select register m (TPSm) (1/2)	
	Change of Figure 7-11. Format of Timer Mode Register mn (TMRmn)	
	Change of caution of Figure 7-16. Format of Timer Input Select register 0 (TIS0)	
	Change of description in 7.3.10 Timer output register 0 (TO0)	
	Change of Figure 7-19. Format of Timer Output Level register 0 (TOL0)	
	Change of Figure 7-20. Format of Timer Output Mode register 0 (TOM0)	
	Change of Figure 7-21. Format of Noise Filter Enable Register 1 (NFEN1)	
	Change of description in 7.3.14 Registers controlling port functions of pins to be used for timer I/O	
	Change of description in 7.5.1 Count clock (f_{TCLK})	
	Change of remark 2 of Figure 7-31. TO0n Pin Output Status at Toggle Output (TOM0n = 0)	
	Change of remark 2 of Figure 7-32. TO0n Pin Output Status at Toggle Output (TOM0n = 1)	
	Deletion of caution in Figure 7-36. TO0n Pin Statuses by Collective Manipulation of TO0n Bit	
	Change of Figure 7-56. Block Diagram of Operation as Input Signal High-/Low-Level Width Measurement	
	Change of Figure 7-60. Block Diagram of Operation as Delay Counter	
	Addition of note 1 and 2 to Figure 8-5. Format of Real-time Clock Control Register 1 (RTCC1) (2/2)	CHAPTER 8 REAL-TIME CLOCK
	Change of description in 10.5 Cautions of Clock Output/Buzzer Output Controller	CHAPTER 10 CLOCK OUTPUT/BUZZER OUTPUT CONTROLLER
	Addition and change of description in 12.1 Function of A/D Converter	CHAPTER 12 A/D CONVERTER
	Change of Figure 12-3. Format of A/D Converter Mode Register 0 (ADM0)	
	Change of Table 12-2. Setting and Clearing Conditions for ADCS Bit	
	Change of Figure 12-4. Timing Chart When A/D Voltage Comparator Is Used	
	Change of note 1 of Table 12-3. A/D Conversion Time Selection	
	Change of Figure 12-11. Format of Analog Input Channel Specification Register (ADS)	
	Change of description in 12.6.1 Software trigger mode (sequential conversion mode)	
	Change of Figure 12-17. Example of Software Trigger Mode (Sequential Conversion Mode) Operation Timing	

(3/7)

Edition	Description	Chapter
Rev.1.10	Change of description in 12.6.2 Software trigger mode (one-shot conversion mode)	CHAPTER 12 A/D CONVERTER
	Change of Figure 12-18. Example of Software Trigger Mode (One-Shot Conversion Mode) Operation Timing	
	Addition of 12.6.3 Software trigger mode (scan mode, sequential conversion mode)	
	Addition of 12.6.4 Software trigger mode (scan mode, one-shot conversion mode)	
	Change of description in 12.6.5 Hardware trigger no-wait mode (sequential conversion mode)	
	Change of Figure 12-21. Example of Hardware Trigger No-Wait Mode (Sequential Conversion Mode) Operation Timing	
	Change of description in 12.6.6 Hardware trigger no-wait mode (one-shot conversion mode)	
	Change of Figure 12-22. Example of Hardware Trigger No-Wait Mode (One-Shot Conversion Mode) Operation Timing	
	Addition of 12.6.7 Hardware trigger no-wait mode (scan mode, sequential conversion mode)	
	Addition of 12.6.8 Hardware trigger no-wait mode (scan mode, one-shot conversion mode)	
	Change of description in 12.6.9 Hardware trigger wait mode (sequential conversion mode)	
	Change of Figure 12-25. Example of Hardware Trigger Wait Mode (Sequential Conversion Mode) Operation Timing	
	Change of description in 12.6.10 Hardware trigger wait mode (one-shot conversion mode)	
	Change of Figure 12-26. Example of Hardware Trigger Wait Mode (One-Shot Conversion Mode) Operation Timing	
	Addition of 12.6.11 Hardware trigger wait mode (scan mode, sequential conversion mode)	
	Addition of 12.6.12 Hardware trigger wait mode (scan mode, one-shot conversion mode)	
	Change of Figure 12-29. Setting up Software Trigger Mode	
	Change of Figure 12-30. Setting up Hardware Trigger No-Wait Mode	
	Change of Figure 12-31. Setting up Hardware Trigger Wait Mode	
	Change of Figure 12-32. Setup when temperature sensor output/internal reference voltage output is selected	
	Change of Figure 12-33. Setting up Test Trigger Mode	
	Change of description in 12.8 SNOOZE Mode Function	
	Change of description in 12.10(2) Input range of ANI0 to ANI3 and ANI16 to ANI19 pins	
	Change of description in 12.10(5) Analog input (ANIn) pins	
	Change of Table 12-4. Resistance and Capacitance Values of Equivalent Circuit (Reference Values)	

(4/7)

Edition	Description	Chapter
Rev.1.10	Addition of note 2 to 13.1.1 3-wire serial I/O (CSI00, CSI20, CSI21)	CHAPTER 13 SERIAL ARRAY UNIT
	Addition of Figure 13-2. Block Diagram of Serial Array Unit 1	
	Change of note 2 of 13.2.2 Lower 8/9 bits of the serial data register mn (SDRmn)	
	Change of note 2 of Figure 13-8. Format of Serial Communication Operation Setting Register mn (SCRmn) (2/2)	
	Change of cautions 2 and 4 of Figure 13-9. Format of Serial Data Register mn (SDRmn)	
	Change of Figure 13-18. Examples of Reverse Transmit Data	
	Change of caution 2 in Figure 13-22. Peripheral Enable Register 0 (PER0) Setting When Stopping the Operation by Units	
	Change of 13.5 Operation of 3-Wire Serial I/O (CSI00, CSI20, CSI21) Communication	
	Change of description in 13.5.1 Master transmission	
	Change of note of 13.5.1(1) (d) Serial output register m (SOm)	
	Change of note of 13.5.2(1) (d) Serial output register m (SOm)	
	Change of description in 13.5.3 Master transmission/reception	
	Change of note of 13.5.3(1) (d) Serial output register m (SOm)	
	Change of note of 13.5.4(1) (d) Serial output register m (SOm)	
	Change of note of 13.5.5(1) (d) Serial output register m (SOm)	
	Change of note of 13.5.6(1) (d) Serial output register m (SOm)	
	Change of description in 13.5.7 SNOOZE mode function	
	Change of Figure 13-70. Timing Chart of SNOOZE Mode Operation (once startup) (Type 1: DAPmn = 0, CKPmn = 0)	
	Change of Figure 13-71. Flowchart of SNOOZE Mode Operation (once startup)	
	Change of Figure 13-72. Timing Chart of SNOOZE Mode Operation (continuous startup) (Type 1: DAPmn = 0, CKPmn = 0)	
	Change of Figure 13-73. Flowchart of SNOOZE Mode Operation (continuous startup)	
	Change of remark 1 of Figure 13-75. Example of Contents of Registers for UART Transmission of UART(UART0, UART1) (2/2)	
	Change of description in 13.6.2 UART reception	
	Change of Figure 13-86. Procedure for Resuming UART Reception	
	Change of description and addition of caution 5 to 13.6.3 SNOOZE mode function	
	Change of Figure 13-89. Timing Chart of SNOOZE Mode Operation (EOCm1 = 0, SSECm = 0/1)	
	Change of Figure 13-90. Timing Chart of SNOOZE Mode Operation (EOCm1 = 1, SSECm = 0)	
	Change of Figure 13-91. Flowchart of SNOOZE Mode Operation (EOCm1 = 0, SSECm = 0/1 or EOCm1 = 1, SSECm = 0)	
	Change of Figure 13-92. Timing Chart of SNOOZE Mode Operation (EOCm1 = 1, SSECm = 1)	
	Change of Figure 13-93. Flowchart of SNOOZE Mode Operation (EOCm1 = 1, SSECm = 1)	

(5/7)

Edition	Description	Chapter
Rev.1.10	Change of caution and remark 1 of 13.6.4 Calculating baud rate	CHAPTER 13 SERIAL ARRAY UNIT
	Change of Figure 13-97. Example of Contents of Registers for Address Field Transmission of Simplified I^2C (IIC00, IIC20)	
	Deletion of remark in Figure 13-98. Initial Setting Procedure for Simplified I^2C	
	Change of Figure 13-101. Example of Contents of Registers for Data Transmission of Simplified I^2C (IIC00, IIC20) (1/2)	
	Change of Figure 13-104. Example of Contents of Registers for Data Reception of Simplified I^2C (IIC00, IIC20) (1/2)	
	Change of Table 13-5. Selection of Operation Clock For Simplified I^2C	
	Change of Figure 14-1. Block Diagram of Serial Interface IICA0	CHAPTER 14 SERIAL INTERFACE IICA
	Change of Figure 14-9. Format of IICA Control Register n1 (IICCTLn1)	
	Addition of description to 14.3.6 IICA low-level width setting register n (IICWLn)	
	Change of description in 14.4.2 Setting transfer clock by using IICWLn and IICWHn registers	
	Change of Figure 14-22. Flow When Setting WUPn = 1	
	Change of Figure 14-23. Flow When Setting WUPn = 0 upon Address Match (Including Extension Code Reception)	
	Change of description in 14.5.13 Wakeup function	
	Change of Figure 14-24. When Operating as Master Device after Releasing STOP Mode other than by INTIICAn	
	Change of description in 14.5.14(1) When communication reservation function is enabled	
	Change of note 1 and remark 1 of Figure 14-27. Communication Reservation Protocol	
	Change of description in 14.5.14(2) When communication reservation function is disabled	
	Change of description in 14.5.15(3) If other I^2C communications are already in progress	
	Change of Figure 14-28. Master Operation in Single-Master System	
	Change of Figure 14-29. Master Operation in Multi-Master System (1/3)	
	Change of remark 1 of Figure 14-29. Master Operation in Multi-Master System (2/3)	
	Change of Figure 14-30. Slave Operation Flowchart (1)	
	Change of description in 15.1 Overview of RF Transceiver	CHAPTER 15 RF TRANSCEIVER
	Addition of description in 15.2.1 Digital pins, and change of description in (4) TXSELH_RF, TXSELL_RF	
	Change of Table 15-3. Pin Status in Each Operation Mode (1/2)	
	Addition of 17.6 (2) Contention with interrupt requests	CHAPTER 17 DMA CONTROLLER
	Change of Table 18-1. Interrupt Source List	CHAPTER 18 INTERRUPT FUNCTIONS
	Change of Table 18-2. Flags Corresponding to Interrupt Request Sources (1/2)	
	Change of Table 18-5. Relationship Between Interrupt Requests Enabled for Multiple Interrupt Servicing During Interrupt Servicing	

(6/7)

Edition	Description	Chapter
Rev.1.10	Change of Table 19-1. Operating Statuses in HALT Mode	CHAPTER 19 STANDBY FUNCTION
	Change of Table 19-3. Operating Statuses in SNOOZE Mode	
	Deletion of caution in Figure 20-3. Timing of Reset Due to Watchdog Timer Overflow, Execution of Illegal Instruction, Detection of RAM Parity Error, or Detection of Illegal Memory Access Overflow	CHAPTER 20 RESET FUNCTION
	Change of Figure 21-2. Timing of Generation of Internal Reset Signal by Power-on-reset Circuit and Voltage Detector	CHAPTER 21 POWER-ON-RESET CIRCUIT
	Change of description in 22.1 Functions of Voltage Detector	CHAPTER 22 VOLTAGE DETECTOR
	Change of description in 22.4.2 When used as interrupt mode	
	Change of description in 22.4.3 When used as interrupt & reset mode	
	Change of description in 23.3.1 Flash memory CRC operation function (high-speed CRC)	CHAPTER 23 SAFETY FUNCTIONS
	Change of note of 23.3.7 Frequency detection function	
	Addition of description in 25.1.1(3) 000C2H/010C2H	CHAPTER 25 OPTION BYTE
	Change of Figure 25-3. Format of Option Byte (000C2H/010C2H)	
	Change of Table 26-1. Wiring Between RL78/G1D and Dedicated Flash Memory Programmer	CHAPTER 26 FLASH MEMORY
	Change of Figure 26-2. Communication with Dedicated Flash Memory Programmer	
	Change of Table 26-2. Pin Connection	
	Addition of 26.3.5 X1 and X2 pins	
	Change of Figure 26-7. Setting of Flash Memory Programming Mode	
	Change of remark 1 of 26.6 Self-Programming	
	Change of Figure 26-10. Example of Executing Boot Swapping	
	Change of description and caution 2 in 26.8.1 Data flash overview	
	Change of description in 26.8.3 Procedure for accessing data flash memory	
	Change of Table 27-1. On-Chip Debug Security ID	CHAPTER 27 ON-CHIP DEBUG FUNCTION
	Change of Table 29-2. Symbols in “Operation” Column	CHAPTER 29 INSTRUCTION SET
	Change of description in 30.3.2 On-chip oscillator characteristics	CHAPTER 30 ELECTRICAL SPECIFICATIONS
	Change of description in 30.5. Current Consumption	
	Addition of specification to 30.5.1(3) Current for each peripheral circuit	
	Change of description in 30.9.1 RF transmission characteristics	
	Change of description in 30.9.2 RF reception characteristics	
	Change of description in 30.9.3 Performance mapping for typical RF (Reference)	

(7/7)

Edition	Description	Chapter
Rev.1.00	Change of description in 1.1 Features	CHAPTER 1 OUTLINE
	Addition of description in 1.1 Features	
	Change of Figure 1-1. Part Number, Memory Size, and Package of RL78/G1D	
	Change of Table 1-1. List of Ordering Part Numbers	
	Change of 1.3 Pin Configuration (Top View)	
	Change of 1.4 Pin Identification	
	Change of 1.5 Block Diagram	
	Change of 1.6 Outline of Functions	
	Change of description in 2.1 Connection Pins of MCU and RF Transceiver	CHAPTER 2 CONNECTION BETWEEN MCU AND RF TRANSCEIVER
	Change of Table 2-2. Pins Externally Connected on User Board	
	Change of description in 2.3 Initial Settings of Unused Internal Pins of MCU	
	Change of description in 2.4 Operation Clock of Bluetooth Low Energy	
	Change of Table 2-4. Clock Resonator Connection (Using on-chip low-speed oscillator in the RF unit as a slow clock.)	
	Change of Figure 2-1. Clock Configuration (Using on-chip low-speed oscillator in the RF unit as a slow clock.)	
	Change of Table 2-5. Clock Resonator Connection (Using PCLBUZ0 of the MCU block as a slow clock.)	
	Change of Figure 2-2. Clock Configuration (Using PCLBUZ0 of the MCU block as a slow clock.)	
	Change of description in 2.5 Power Configuration	
	Change of Figure 2-3. Power Configuration	
	Change of 3.1 Pin Functions	CHAPTER 3 PIN FUNCTIONS
	Change of 3.2 Functions Other than Port Pins	
	Change of Table 3-3. Connection of Unused Pins	
	Addition of description in 5.2.6 Port 6	CHAPTER 5 PORT FUNCTIONS
	Addition and change of descriptions	CHAPTER 15 RF TRANSCEIVER
	Change of Table 26-9. Example of Signature Data	CHAPTER 26 FLASH MEMORY
	Addition and change of descriptions	CHAPTER 30 ELECTRICAL SPECIFICATIONS
	Change of PACKAGE DRAWINGS	CHAPTER 31 PACKAGE DRAWINGS
Rev.0.50	First Edition issued	Throughout

RL78/G1D User's Manual: Hardware

Publication Date: Rev.1.00 Apr 24, 2015
Rev.1.20 Dec 16, 2016

Published by: Renesas Electronics Corporation

SALES OFFICES Renesas Electronics Corporation http://www.renesas.com

Refer to "http://www.renesas.com/" for the latest and detailed information.

Renesas Electronics America Inc.
2801 Scott Boulevard Santa Clara, CA 95050-2549, U.S.A.
Tel: +1-408-588-6000, Fax: +1-408-588-6130

Renesas Electronics Canada Limited
9251 Yonge Street, Suite 8309 Richmond Hill, Ontario Canada L4C 9T3
Tel: +1-905-237-2004

Renesas Electronics Europe Limited
Dukes Meadow, Millboard Road, Bourne End, Buckinghamshire, SL8 5FH, U.K
Tel: +44-1628-585-100, Fax: +44-1628-585-900

Renesas Electronics Europe GmbH
Arcadiastrasse 10, 40472 Düsseldorf, Germany
Tel: +49-211-6503-0, Fax: +49-211-6503-1327

Renesas Electronics (China) Co., Ltd.
Room 1709, Quantum Plaza, No.27 ZhiChunLu Haidian District, Beijing 100191, P.R.China
Tel: +86-10-8235-1155, Fax: +86-10-8235-7679

Renesas Electronics (Shanghai) Co., Ltd.
Unit 301, Tower A, Central Towers, 555 Langao Road, Putuo District, Shanghai, P. R. China 200333
Tel: +86-21-2226-0888, Fax: +86-21-2226-0999

Renesas Electronics Hong Kong Limited
Unit 1601-1611, 16/F., Tower 2, Grand Century Place, 193 Prince Edward Road West, Mongkok, Kowloon, Hong Kong
Tel: +852-2265-6688, Fax: +852 2886-9022

Renesas Electronics Taiwan Co., Ltd.
13F, No. 363, Fu Shing North Road, Taipei 10543, Taiwan
Tel: +886-2-8175-9600, Fax: +886 2-8175-9670

Renesas Electronics Singapore Pte. Ltd.
80 Bendemeer Road, Unit #06-02 Hyflux Innovation Centre, Singapore 339949
Tel: +65-6213-0200, Fax: +65-6213-0300

Renesas Electronics Malaysia Sdn.Bhd.
Unit 1207, Block B, Menara Amcorp, Amcorp Trade Centre, No. 18, Jln Persiaran Barat, 46050 Petaling Jaya, Selangor Darul Ehsan, Malaysia
Tel: +60-3-7955-9390, Fax: +60-3-7955-9510

Renesas Electronics India Pvt. Ltd.
No.777C, 100 Feet Road, HAL II Stage, Indiranagar, Bangalore, India
Tel: +91-80-67208700, Fax: +91-80-67208777

Renesas Electronics Korea Co., Ltd.
12F., 234 Teheran-ro, Gangnam-Gu, Seoul, 135-080, Korea
Tel: +82-2-558-3737, Fax: +82-2-558-5141

© 2016 Renesas Electronics Corporation. All rights reserved.
Colophon 4.0

RL78/G1D

Renesas Electronics Corporation

R01UH0515EJ0120